RESOLUTION 2023-038 **PASSED: MARCH 27, 2023**

APPROVING AN AGREEMENT FOR ARCHITECTURAL/ENGINEERING, PLANNING AND SPECIAL SERVICES, AND DESIGN PHASE SERVICES WITH CRAWFORD, MURPHY AND TILLY, INC. FOR PROJECT DKB-4924 FOR THE REMOVAL AND REPLACEMENT OF A PORTION OF THE AIRCRAFT PARKING APRON AT THE DEKALB TAYLOR MUNICIPAL AIRPORT IN AN AMOUNT NOT TO EXCEED $47,000 (650-00-00-83900).

WHEREAS, the City of DeKalb (the "City) is a home rule unit of local government and may exercise any power and perform any function pertaining to its government and affairs pursuant to Article VII, Section 6 of the Illinois Constitution of 1970; and

WHEREAS, the City's corporate authorities previously approved Project DKB-4924 to replace a portion of the aircraft parking apron at the DeKalb Taylor Municipal Airport for a total estimated cost of $940,000 with the City's share not to exceed $55,000 (the "Project"); and

WHEREAS, the Project requires the approval of a standard agreement for architectural/engineering, planning and special services; and

WHEREAS, the City's Airport Manager recommends approving an agreement for architectural/engineering planning and special services for the Project with Crawford, Murphy, and Tilly, Inc. in the form attached and incorporated as Exhibit A (the "Agreement"); and

WHEREAS, the City's corporate authorities find that approving the Agreement is in the City's best interests for the protection of the public health, safety and welfare; and

NOW, THEREFORE, BE IT RESOLVED BY COUNCIL OF THE CITY OF DEKALB, ILLINOIS:

SECTION 1: The recitals to this resolution are true, correct, adopted, and incorporated as Section One to this resolution.

SECTION 2: The City's corporate authorities approve the Agreement in the same form as the attached and incorporated Exhibit A, The City's corporate authorities further approve, authorize, and direct the City Manager to execute the Agreement and to perform such acts as may be necessary to effectuate the Agreement.

SECTION 2: This resolution and each of its terms shall be the effective legislative act of a home rule municipality without regard to whether such resolution should (a) contain terms contrary to the provision of current or subsequent non-preemptive state law, or (b) legislate in a manner or regarding a matter not delegated to municipalities by state law. It is the intent of the City's corporate authorities that to the extent that the terms of this resolution should be inconsistent with any non-preemptive state law, that this resolution shall supersede state law in that regard in its jurisdiction.

SECTION 3: This resolution shall be in full force and effect from and after its passage and approval as provided by law.

PASSED BY THE CITY COUNCIL of the City of DeKalb, Illinois, at a Regular meeting thereof held on the 27th day of March 2023 and approved by me as Mayor on the same day. Passed by a roll call vote as follows:

5-0-3	Aye	Nay
Morris	Absent	
Larson	X	
Smith	Absent	
Perkins	X	
McAdams	Absent	
Verbic	X	
Faivre	X	
Barnes	X	

CITY OF DEKALB STATE OF ILLINOIS

COHEN BARNES, Mayor

ATTEST:

Ruth A. Scott, Executive Assistant

STANDARD AGREEMENT FOR CONSULTANT SERVICES AT ILLINOIS AIRPORTS FOR ARCHITECTURAL/ENGINEERING (A/E), PLANNING AND SPECIAL SERVICES

Authorized for use by
The Illinois Department of Transportation
Division of Aeronautics
Effective: June 2012

☐ Preliminary Assessment and Schematic Design ☐ Construction Phase Services

☒ Design Phase Services ☒ Planning and Special Services

THIS AGREEMENT, made at **DeKalb**, Illinois, this **13th** day of **February** in the year 20**23** by and between the **City of DeKalb** (hereinafter referred to as the "Sponsor"), and **Crawford, Murphy and Tilly, Inc.** (hereinafter referred to as the "Consultant"). This Agreement expires 5 years from the date of execution.

WITNESSETH

The Sponsor intends to undertake the accomplishment of a project pursuant to the development of a public air navigation facility known as the **DeKalb Taylor Municipal Airport (DKB)** in **DeKalb** County, state of Illinois; and the project shall be identified as the Illinois Project No. **DKB-4924**; AIP Project No. **3-17-SBGP-**; The following is the detailed project title and description from the Illinois Department of Transportation's Office of Planning and Programming (OP&P) program letter which shall be carried through the development of the project (attach supplemental information as necessary in Section I.H., Detailed Scope of Services):

Remove & Replace a Portion of the Aircraft Parking Apron

A detailed sketch of the proposed work, labeled ATTACHMENT P, shall be attached.

In consideration of the benefits which will accrue to the parties hereto by virtue of the Agreement and the respective covenants herein contained, IT IS MUTUALLY COVENANTED AND AGREED as follows:

The Consultant agrees to furnish executed "Certification of Engineer" and certain professional engineering services enumerated herein-after, in connection with the implementation and development of the aforesaid project.

The Department of Transportation, Division of Aeronautics within the state of Illinois shall act as Agent of the Owner/Sponsor for all matters involving the development of any public air navigation facility by virtue of the Illinois Aeronautics Act. The Illinois Aeronautics Act requires and directs the Illinois Department of Transportation, Division of Aeronautics (hereinafter referred to as the "Department") to "*regulate and supervise aeronautics within this state*", with "*aeronautics*" defined as "...*the design, establishment, construction, extension, operation, improvement, repair or maintenance of airports*...". The Department shall not expend any funds appropriated, or made available for any work upon any such project that is not contracted for and constructed or developed under the supervision or direction of the Department. Financial assistance may include reimbursement to eligible airport Sponsors for engineering costs directly related to projects financed in whole or in part by federal/state monies provided such engineering costs were approved by the Department prior to the payment of these costs by the airport Sponsor. The approval of engineering costs prior to payment shall qualify those costs for federal/state reimbursement but shall not constitute an obligation of federal/state funds.

Since the services contemplated under this Agreement are professional in nature, it is understood that the Consultant, acting as an individual, partnership, firm or other legal entity, is of professional status and will be governed by professional ethics in their relationship to the Department and the Sponsor. The Department acknowledges the professional and ethical status of the Consultant by approving this Agreement and the associated fees for federal/state eligibility (either in whole or part) on the basis of their qualifications and experience and determining their compensation by mutually satisfactory negotiations.

Any additions/deletions, revisions/modifications to this Agreement without the expressed written consent of the Department shall void this Agreement as it relates to state and federal funding participation eligibility.

I. ARCHITECTURAL/ENGINEERING (A/E), PLANNING AND SPECIAL SERVICES

The Consultant agrees to perform various professional engineering and planning services and provide necessary and required information pursuant to the accomplishment of the above referenced project.

It is understood that meetings will be common to all phases. The Consultant will coordinate project kick-off, pre-design and pre-construction meetings and project status update meetings, as required, in order to resolve project issues with the Department, Sponsor and/or other regulatory and review agencies. The Department shall be notified of scheduled agency meetings and given the opportunity to participate. Meetings for which effort will be billed shall be thoroughly documented by minutes with copies distributed to the Sponsor and the Department within 10 days of the meeting. Failure to properly document meeting discussions could result in the loss of part or all of the professional services compensation eligibility associated with this activity.

A. PRELIMINARY ASSESSMENT AND SCHEMATIC DESIGN – Included with Paragraph I.B

This phase includes activities required for agency coordination and permit development, non-routine surveys, testing and architectural/engineering preliminary design considerations of a project. Elements of this phase may include development of architectural schematic building designs and reports, non-routine geological and field investigations (soil borings and pavement cores), DCP testing, FWD testing (when used to evaluate pavement as part of a strengthening project), coordination of FAA reimbursable agreements, coordination of utility relocation agreements, coordination of force account activity (must be pre-approved by the Department in writing).

The Consultant shall furnish and/or perform engineering reconnaissance necessary for the preparation and development of an engineering report, bidding documents (design plans and specifications) including topographic field surveys, crack surveys, and sampling and testing for routine soils investigations (in accordance with ATTACHMENT J – Testing Schedule & ATTACHMENT K – Testing Rates & Cost Summary).

This phase will culminate in the submittal of a detailed engineering report with project alternatives and design recommendations and project completion timeline assessment.

The Consultant shall furnish an engineering report in accordance with standard practices and the provisions of ATTACHMENT E – Engineering Report. The report will include an analysis of preliminary surveys, geotechnical testing and alternative designs and include final project design recommendations.

The project completion timeline assessment will identify necessary effort required to complete the final project design (complete construction plans and specifications). This phase of project development will represent approximately 35% of the project design timeline. Project formulation should be consistent with the TIP submittal and the program letter project description (ATTACHMENT R). If not, identify components that have changed as a result of the preliminary assessment and schematic design analysis.

A detailed scope of services shall be attached with anticipated labor effort and costs delineated in ATTACHMENTS A / A1.

B. DESIGN PHASE SERVICES

This phase shall include activities required to accomplish a project design in accordance with the established Aeronautics letting schedule project design timeline and approved letting date determined at the pre-design meeting. Requests for time extensions beyond the previously agreed-to submittal deadline dates (as established in the Department's Letting Schedule, ATTACHMENT Q, and this Agreement) must be made to the Department in writing not less than 5 days prior to the due date of the submittal. The request for extension must be signed by a principal/officer of the Consultant's firm. Incomplete submittals will not be accepted.

Milestone submittals include the engineering report (at 35% design timeline), plan / spec review (at 80% design timeline) and final submittal of all deliverables (at 100% design timeline). A detailed scope of services shall be attached with anticipated labor effort and costs delineated in ATTACHMENTS B / B1. Elements of this phase may include:

1. CONSTRUCTION PLANS, SPECIAL PROVISIONS AND ESTIMATES

   The Consultant shall prepare and furnish for Department review and comment construction plans, special provisions and construction Safety Plan (per guidance explained in FAA AC 150/5370-2F (or current) Operational Safety on Airports during Construction) at the 80% project design timeline with detailed estimate of costs, estimated DBE participation goal and working/calendar day flow chart, for the particular design authorized in this Agreement.

2. CLARIFICATION OF PLANS

   The Consultant shall render clarification of the construction plans and specifications, when and if such clarification is deemed necessary.

3. BIDDING ASSISTANCE

   The Consultant shall assist the Sponsor and/or Department in the bidding process, analyze and summarize bid results.

C. CONSTRUCTION PHASE SERVICES – Not included in this agreement

This phase shall include all basic services after the award. A detailed scope of services shall be attached with anticipated labor effort and costs delineated in ATTACHMENTS C / C1.

1. OFFICE ENGINEERING

   a. SHOP DRAWINGS
      Review the detailed construction, shop and erection drawings submitted by the contractor(s) for compliance with design concepts.

   b. SUPPLEMENTARY SKETCHES
      Preparation of elementary and supplementary sketches plus estimates required to resolve actual field conditions.

   c. RECORD DRAWINGS
      The Consultant shall prepare Record Drawings within thirty (30) days after the official Notification from the Department of the Official Acceptance of the Construction Work; and after approval by the Department, furnish said Department with one (1) set of such record drawings. The submittal format shall be in accordance with the current policies of the Department.

   d. MATERIALS CERTIFICATION
      Prior to reporting a pay item quantity for payment, the materials used and incorporated in, or associated with the pay item, shall be verified for specification compliance by the Consultant. The Consultant shall obtain and review all certifications and/or test results required by the policies of the Department and the Department's *Manual for Documentation of Airport Materials*. At the completion of, or any time prior to the completion of the final quantity of a pay item, the Consultant shall submit the aforementioned material certifications and/or test results, that were utilized for acceptance of material, to the Department for review and final approval. Prior to final payment of engineering services under this agreement, the Consultant shall have submitted required certifications and test results to the Department, and the Consultant shall have signed the Department's MATERIALS CERTIFICATION FORM.

2. FIELD ENGINEERING

a. RESIDENT ENGINEER APPROVAL
The Consultant agrees to furnish the name and qualifications of the Resident Engineer in writing for approval of the participating agencies prior to the preconstruction conference that shall attend said preconstruction conference and shall perform the various professional engineering services required of the Resident Engineer in 2.b. thru 2.f. below and inspection of construction.

b. DAILY DIARY
The Resident Engineer shall maintain a daily diary. Copies shall be forwarded to the Department (ATTACHMENT F).

c. DUTIES OF RESIDENT ENGINEER
Furnish full time (unless part time is approved by the Sponsor and/or Department) Resident Engineering of construction including project inspection, field testing, and furnish surveying at the site of the work, whose duties shall include all reasonable, proper and customary duties as are usually and customarily furnished in connection with the general engineering of construction of such improvements, including but not limited to the following:

i. Performance of acceptance and quality assurance tests when required by Department policy and/or contract specification. Examples of these tests include but are not limited to: Testing concrete for slump and air content; testing concrete for strength; testing bituminous concrete pavement for density using the nuclear method and using the Bulk Specific Gravity Method. Obtaining representative samples of miscellaneous materials such as paint, geotextile fabric, joint sealer, epoxy, polyester resin, etc. for testing as necessary, and/or as directed by the Department; performance of field density tests of earthwork embankments, backfills and subgrade; field density tests of subbase and base courses, and moisture content tests on materials where applicable; and, laboratory proctor tests where applicable. Test Reports shall be submitted to the Department within three (3) working days of the date the test was conducted.

ii. Inspection/Measurement/Oversight of construction to determine that the work was completed in substantial conformance with the approved plans and specifications, and in compliance with the requirements set forth in the contract documents. All stop or start work orders shall be issued by the Department; the Resident Engineer shall recommend the orders. Document pay item quantities reported for pay in accordance with the latest revision of the Department's *Airport Construction Documentation Manual.*

iii. Preparation and forwarding to the Department of periodic project reports required by the Department. Bi-weekly construction reports will be submitted to the Department, within three (3) calendar days of the end of the contractor's work week.

iv. To obtain and review for specification compliance, material certifications and/or test results for all materials prior to their use in the construction.

v. To reject for inclusion in the project, any materials that are delivered without certification and/or test results, or materials delivered with certification that has been found to be in noncompliance, or any defect found through visual inspection which renders the material unsuitable for inclusion in the project. The Department shall be notified when any rejections are made. Materials that are delivered without certification and/or test results may be stockpiled or

stored in a manner acceptable to the Resident Engineer until such time as the certification and/or test result arrive and are reviewed and accepted by the Resident Engineer.

vi. Preparation of Reports required per the Sponsor's NPDES permit while providing on-site services, retaining all support documentation.

vii. Participate in audits performed to determine that the project is proceeding accordingly per the plans and specifications and adhering to AIP grant requirements.

d. FINAL INSPECTION

Initiate a request, upon substantial completion of all construction work, for a final inspection by the Department. When necessary, a punch list of uncompleted items and electrical checklist (if applicable) on the project shall be established at the final inspection. Submit a final acceptance letter (punch list complete) which shall certify to the Department and the Sponsor that, to the best of the Consultant's knowledge, information and belief, the work involved has been done in substantial conformance with the plans, specifications, and Contract Document, as the same shall have been modified, or supplemented by change order, supplementary contract or otherwise, and that such work is acceptable.

e. SAFEGUARD THE SPONSOR

Endeavor to safeguard the Sponsor against any defects and deficiencies on the part of the Contractor. The Resident Engineer does not guarantee the performance of the contract by the Contractor, except that the Resident Engineer shall ensure that, to the best of the Resident Engineer's knowledge, information and belief, the work has been done in substantial conformance with the approved plans and specifications and advise the Sponsor and/or the Department in writing of any known noncompliance set forth in the contract. This does not in any way mean that the Resident Engineer is a guarantor of the Contractor's work. The Resident Engineer assumes no responsibility for safety in, on or about the job site, nor shall the Resident Engineer have any responsibility for the safety or adequacy of any equipment, building component, scaffolding, forms or other work aids provided by the contractor; nor is the Resident Engineer responsible for the superintendence of the contractor's work or any acts of the contractor.

f. OTHER ENGINEERING SERVICES

Furnish other Engineering Services which may be required by the Sponsor, including surveys. sub-surface investigations, sampling, testing, and analysis of soils, offsite inspection of materials, laboratory testing, and inspection and control at central mixing plants. Where tests must be conducted by commercial laboratories, only those laboratories approved by the Department will be utilized. If any of these services are conducted by outside firms, the Resident Engineer shall submit copies of the executed contract for such services as specified in Section III.B., of this Agreement. The charges for such services shall be specified in the contract and will remain in effect until completion of the services and acceptance by the Consultant. Certified copies of the results of all tests required by the Department under this paragraph are to be mailed to the Department within five (5) calendar days after the tests are completed.

g. FINAL QUANTITIES

Final quantities associated with the accepted construction work shall be submitted to the Department within thirty (30) days after final acceptance of the construction work.

D. PLANNING AND SPECIAL SERVICES

This phase may involve activities or studies unrelated to or outside of the scope of basic design and construction phase engineering services routinely performed by the Consultant. Those activities may include master plan and airport layout plan development, environmental studies and assessments, PCI surveys, FWD testing (when used to evaluate pavement as part of a publication revision), first-order NGS monument surveys, boundary surveys, aeronautical surveys, photogrammetric surveys and topographic mapping, preparation of property ownership plats and easements, appraisal and land acquisition services, benefit / cost analysis studies, RSA determination studies, drainage studies and analyses, FEMA/FIRM map revisions and GIS updates. A detailed scope of services shall be attached with anticipated labor effort and costs delineated in ATTACHMENTS D / D1.

E. ENDORSEMENT OF DOCUMENTS

The Consultant will endorse and seal all final draft reports, contract plans, maps, right of way plats, and special provisions for construction contract documents. Such endorsements must be made by a person, duly licensed or registered in the appropriate category by the Department of Financial and Professional Regulation of the state of Illinois, being employed by the Consultant and responsible for the portion of the services for which license registration is required. These sealed documents will serve as the record documents for the services covered by the terms of the Agreement.

F. DELIVERABLES

At a minimum, the Consultant shall provide the Department (copy Sponsor upon request) the following deliverables:

1. Final project estimate of costs complete w/ professional services fees and sponsor reimbursement estimates.
2. DBE participation goal and breakout of DBE work.
3. QA verification of ELM Engineers Estimate for Schedule of Prices.
4. Calendar day estimate of construction and detailed breakout of critical work items and associated production rates.
5. One set of final construction plans (half-size) and special provisions – sealed by the Consultant and executed by the Sponsor.
6. One copy of the construction Safety Plan (per guidance explained in FAA AC 150/5370-2F (or current) Operational Safety on Airports during Construction).
7. Original executed Consultant Project Certification (ATTACHMENT N).
8. Executed DBE Final Documentation (ATTACHMENT O).
9. Electronic copy/access of all information (via CD, electronic submittal or ftp site).

G. NOTICE-TO-PROCEED (NTP)

The Consultant shall not commence any phase of the work until the "official notice-to-proceed" (NTP) has been issued in writing either by the Sponsor or Department (via Office of Planning and Programming).

Services to be performed by the Consultant under this Agreement shall become eligible for funding participation consideration as of the date of the written NTP. The execution date of the consultant retainer agreement or the execution date of a consultant agreement for a single project after consultant selection if not included within the retainer agreement, shall constitute the NTP. The Consultant shall schedule a project phase kick-off meeting (pre-design, pre-construction, etc) with the Sponsor and the Department at the earliest possible convenience upon the Sponsor's receipt of this letter.

For projects not covered by a program letter or with program letter pending, the Sponsor is fully liable for all costs incurred as a result of such authorization pending future reimbursement once the project is programmed and a program letter is issued. The Sponsor/Consultant is required to schedule a project phase kick-off meeting (pre-design, pre-construction, etc) with the Sponsor and the Department at the earliest possible convenience.

A copy of the program letter shall be included as ATTACHMENT R of this Agreement.

In the absence of a written, dated notice-to-proceed, the execution date of this Agreement shall be used to determine the eligibility of service dates.

The Sponsor and the Department are not liable, and shall not authorize payment to the Consultant, for any services performed prior to the date of notice to proceed or the execution of this Agreement (whichever takes precedent). All effort, regardless of the notice-to-proceed authorization, is subject to review and eligibility funding determination.

H. DETAILED SCOPE OF SERVICES

Under this agreement the Engineer will provide design phase and special services as provided for herein for the proposed project known as **Remove & Replace a Portion of the Aircraft Parking Apron.**

The design phase and special services engineering effort contained within this agreement has been based on the following additional scope related parameters, understanding of proposed improvements and anticipated level of effort:

I. General
   a. The project schedule is based on the anticipation that the project will be placed on an IDOT letting no later than April 28, 2023. As such, all engineering effort is expected to be completed by the letting date and no additional effort will be required on the project after the anticipated award date.

II. Topographic Survey and Data Gathering
   a. Horizontal and vertical control will be established and extended as necessary to complete the area survey. The horizontal datum used will be the Illinois State Plane Coordinate System of the North American Datum of 1983 (NAD83). This control will be established utilizing GPS and conventional ground surveys as needed. Vertical elevations will reference the North American Vertical Datum of 1988 (NAVD88).
   b. The topographic survey will show the existing site conditions including pavement areas and types. The pavement area within the project limits will be cross-sectioned at approximately 50 foot intervals. Additional elevation data will be gathered but limited to areas adjacent to the edge of pavement.
   c. Geotechnical Investigation will be completed to determine existing pavement structure and soil conditions. CBR, Modified Proctor, Atterberg limits and organic content testing will be completed.

III. Project Improvements
   a. Evaluation of the existing pavement structure along with soil conditions, existing airport fleet mix (as provided by the airport), forecasted fleet mix and existing operations/growth for the determination of pavement structural deficiencies.
   b. The apron replacement area is anticipated to be approximately 280' x 160' on the east side of the apron.
   c. The design will evaluate and rehabilitate the apron longitudinal and transverse slopes and grading while matching existing apron pavement. Efforts will be made to remediate deficiencies to accommodate FAA criteria and positive drainage characteristics.
   d. Existing drainage structure adjustments may be necessary pending the scope of the pavement improvements.

e. Evaluation and design of underdrain system as determined by the existing soil capabilities to facilitate subgrade drainage
f. Remarking of apron pavement markings for the project will be designed in accordance with the latest version of the FAA's Advisory Circular, 150/5340-1, Standards for Airport Markings.
g. Shoulder adjustment, erosion control and landscaping will be designed as necessary.

IV. Special Services
a. Section 163 Determination
b. NEPA Clearance and preparation of Environmental Review
c. Airspace submittal

The anticipated effort and estimated manhours for each Task is defined within Attachments B, B-1, B-2, B-3, D, D-1, D-2 and D-3 contained within this contract.

II. CONSULTANT COMPENSATION

The Sponsor agrees to pay the Consultant as compensation for rendering the professional services hereinabove described and submitted using the standard Department invoice forms (ATTACHMENTS G & H). Burden and overhead rates entered into this Agreement shall be in effect for the length of the agreement and will not be adjusted, except as may be determined under an audit of costs by the Auditor General or the Department. The rates used in this Agreement shall be the latest audited or provisional approved rates by IDOT as of the date of execution of this Agreement (approval letter must be attached). Should the rate change in the time between the final approval notification of fees and the execution of this Agreement, hours will be adjusted accordingly so that there is no increase in the final approved not-to-exceed amount.

Any professional services effort performed beyond the not-to-exceed limits expressed below, and for which a future amendment will be sought, will be performed under all Agreement provisions as the original contracted work. The dollar value of such effort is not considered approved for payment until review and approval by the Department.

A. PRELIMINARY ASSESSMENT AND SCHEMATIC DESIGN – Compensation Included in Paragraph II.B

For services outlined in Section I.A., Preliminary Assessment and Schematic Design, and further detailed in Section I.H., Detailed Scope of Services,

1. a lump sum payment of $ **N/A** (representing approximately 35% of the total estimated professional services compensation for design phase services as determined from the TIP request). The fee shall be paid as a lump sum when the preliminary assessment and schematic design phase deliverables (outlined in Section I.A.) are approved and accepted by the Department.

B. DESIGN PHASE SERVICES

For services outlined in Section I.B., Design Phase Services, and further detailed in Section I.H., Detailed Scope of Services,

1. a cost plus a fixed payment of $ **10,700.00**

   total amount not to exceed $ **92,200.00** unless a major change or addition to the scope of services is required by the Department or extensions of time are necessary for completion of the project. All justification for amendments shall be documented with effort recorded separate from the hours approved under this Agreement. All amendment requests must be supported by justification per Section III.M., Amendments to the Agreement. The payment of this fee shall be made in monthly installments submitted by the Consultant and approved by the Department. The final charges shall be submitted after the Design Phase Services have been performed, approved and all deliverables

accepted by the Department in accordance with the guidance outlined in Section I.F. This period of time expires 30 days after award of the construction contract. Any submittal after this time shall not be considered eligible for payment / reimbursement by the Department unless extended by the Department.

2. a lump sum payment of $ **N/A** unless a major change or addition to the scope of work is required by the Department or extensions of time are necessary for completion of the project. All justification for amendments shall be documented with effort recorded separate from the hours approved under this Agreement. All amendment requests must be supported by justification per Section III.M., Amendments to the Agreement. The fee shall be paid as a lump sum when the design phase deliverables (outlined in Section I.F.) are approved and accepted by the Department.

C. CONSTRUCTION PHASE SERVICES – Not included in this Agreement

For services outlined in Section I.C., Construction Phase Services, and further detailed in Section I.H, Detailed Scope of Services,

1. a cost plus a fixed payment of $ **N/A**

   total amount not to exceed $ **N/A** unless a major change or addition to the scope of work is required by the Department or extensions of time are necessary for completion of the project. All justification for amendments shall be documented with effort recorded separate from the hours approved under this Agreement. All amendment requests must be supported by justification per Section III.M., Amendments to the Agreement. The payment of this fee shall be made in monthly installments submitted to and approved by the Sponsor (and/or Department if applicable). The final charges shall be as soon as possible after official notification from the Consultant of the acceptance of the construction work. A time line will be submitted at each billing cycle after 50% which will indicate a projection of the completed engineering fee vs. the contractor's progress.

   If more than one contract exists for the project, the monthly invoices submitted by the Consultant shall detail the amounts of work accomplished under each separate contract. The invoices shall also indicate the dates that the services were performed. If these services are furnished by the Consultant by obtaining such services outside the Consultant's organization, the Consultant shall be reimbursed at his actual cost for obtaining these services. However, the total payment to the Consultant shall be within the "not to exceed" amount as previously stated unless an amendment to this agreement is approved by the Sponsor (and/or Department if applicable).

D. PLANNING AND SPECIAL SERVICES

For services outlined in Section I.D., Planning and Special Services, and further detailed in Section I.H., Detailed Scope of Services,

1. a cost plus a fixed payment of $ **760.00**

   total amount not to exceed $ **6,000.00** unless a major change or addition to the scope of work is required by the Department or extensions of time are necessary for completion of the project. All justification for amendments shall be documented with effort recorded separate from the hours approved under this Agreement. All amendment requests must be supported by justification per Section III.M., Amendments to the Agreement. The payment of this fee shall be made in monthly installments submitted to and approved by the Sponsor. The final charges for the Special Services Phase shall be submitted within forty-five (45) days after official notification from the Consultant of the acceptance of the construction work or within 45 days after official notification from the Department of acceptance of other non-construction projects unless extended by the Department.

2. a lump sum payment of $_____**N/A**_____unless a major change or addition to the scope of work is required by the Department or extensions of time are necessary for completion of the project. All justification for amendments shall be documented with effort recorded separate from the hours approved under this Agreement. All amendment requests must be supported by justification per Section III.M., Amendments to the Agreement. The fee shall be paid as a lump sum when the deliverables are approved and accepted by the Department.

III. SPECIAL CONDITIONS

The Consultant shall render the services in accordance with generally accepted Professional Standards.

A. TERMINATION

(Reference: 49 CFR Part 18.36(i)(2); FAA Order 5100.38)

The Sponsor, by written seven (7) day notice, may terminate this agreement in whole or in part at any time, because of the failure of the other party to fulfill his agreement obligations. Upon receipt of such notice, the Consultant shall: (1) immediately discontinue all services affected (unless the notice directs otherwise), and (2) deliver to the Sponsor all data, drawings, specifications, reports, estimates, summaries and such other information and materials as may have been accumulated by the Consultant in performing this agreement whether completed or in process.

1. If the termination is due to the failure of the Consultant to fulfill his agreement obligations, the Sponsor may take over the work and prosecute the same to completion by agreement or otherwise. In such case, the Consultant shall be liable to the Sponsor for any additional cost occasioned to the Sponsor thereby.

2. If, after notice of termination for failure to fulfill agreement obligations, it is determined that the Consultant had not so failed, the termination shall be deemed to have been effected for the convenience of the Sponsor.

3. It is hereby understood and agreed that should the agreement be terminated, the Consultant shall be entitled to and shall receive a fee based on the amount of work accomplished and approved by the Department up to the day of notification of termination. The fee shall be equal to the sum of the actual number of man-hours of each category of work applied at a negotiated hourly rate, plus any outside services approved by the participating agencies and accomplished prior to the notification. If terminated under Section III.HH., Breach of Contract Terms, the Consultant will not be entitled to profit on the work accomplished.

B. CHANGE IN CONSTRUCTION PLANS

It is hereby understood and agreed that if the construction plans are completed in accordance with criteria and/or decisions made by the Sponsor (and/or the Department if applicable), and approved by the Department, and said construction plans are substantially changed or revised, for any reason other than the fault of the Consultant in preparing same, then the Consultant shall be entitled to compensation for rendering the services necessary to complete the changes. The amount of this fee shall be negotiated between the Sponsor, Consultant and the Department, and approved by the Department, and an amendment to the agreement should be accomplished prior to authorizing the Consultant to proceed with the changes. The fee shall be due and payable when the revisions are approved by the Sponsor and the Department.

It is the Consultants responsibility to notify the Department as soon as possible when changes/revisions are identified that are beyond the scope of services contemplated under this Agreement.

C. HOLD HARMLESS

The Consultant shall be responsible to pay for all labor, material and equipment costs incurred and for any and all damages to property or persons to the proportionate extent arising out of the negligent performance of services under this agreement and shall indemnify and save harmless the Sponsor, (and/or the Department if applicable), their officers, agents and employees from all third party suits, claims, actions or damages of any nature whatsoever to the proportionate extent resulting there from. These indemnities shall not be limited by the listing of any insurance coverage. If any errors, negligent acts and/or omissions are made by the Consultant in any phase of the work under this agreement, the correction of which may require additional field or office work, the Consultant will be promptly notified and will be required to perform such additional services as may be necessary to correct these errors, negligent acts and/or omissions without undue delay and without additional cost to the Sponsor (and/or the Department if applicable). The Consultant shall be responsible for any damages incurred as a result of his errors, negligent acts and/or omissions and for any losses or cost to repair or remedy construction as a result of his errors, omission and/or negligent acts, to the extent such error, omission or negligent act breeches the Professional Standard of care. The Consultant shall not be responsible for any consequential damages of the Sponsor or the Department. Neither the Consultant, nor the Sponsor, nor the Department shall be obligated for the other parties' negligence or for the negligence of others.

D. DRAWING OWNERSHIP

It is further mutually agreed by the parties hereto that reproducible copies of the drawings, computer disks, tracings, construction plans, specifications and maps prepared or obtained under the terms of the contract shall be delivered to and become the property of the Sponsor and basic survey notes and sketches, charts, computations and other data shall be made available upon request of the Sponsor. If any information is used by the Sponsor or another Consultant such use or reuse by the Sponsor or others shall be at the sole risk and without liability or legal exposure to the Consultant.

E. CONTRACT FOR OUTSIDE SERVICES

If any of the services outlined in Section I. are furnished by the Consultant by obtaining such services outside the Consultant's organization, the Consultant shall provide an executed contract between the person(s) or firm and the Consultant outlining the services to be performed and the charges for the same. Two (2) copies of the executed contract shall be submitted to the participating agencies for approval prior to the services being performed; all covenants and Special Conditions shall be included and binding on all subcontracts.

F. FORMERLY NOTICE TO PROCEED (See Section I.G.)

G. SUBLET AGREEMENT

Each party binds himself, his partners, successors, executors, administrators and assigns, to the other part of this agreement and to the partners, successors, executors, administrators and assigns for such other party at all covenants of this Agreement.

Except as above, neither the Sponsor nor the Consultant shall assign, sublet or transfer his interest in this agreement without the written consent of the other party hereto.

H. AGREEMENT EXPIRES

This agreement expires upon final approval and acceptance of the completed project(s) by the Sponsor (and/or Department as applicable), and after all final engineering charges have been paid to the Consultant as of the date of project close-out or after five years from the date of execution, whichever comes first. Payment liability by the State is as outlined above (see Section I.G., Notice to Proceed and Section II., Consultant Compensation).

I. EQUAL EMPLOYMENT OPPORTUNITY

(Reference: 49 CFR Part 21; FAA AC 150/5100-15A or latest revision)

The Consultant agrees to conduct the services in compliance with all the requirements imposed by or pursuant to Title VI of the Civil Rights Act of 1964, Part 21 of the Regulations of the Secretary of Transportation, and Executive Order No. 11246, "Equal Employment Opportunity," as amended.

During the performance of this contract, the Consultant, for itself, its assigns and successors in interest (hereinafter referred to as the "Consultant") agrees as follows:

1. Compliance with Regulations. The Consultant shall comply with the Regulations relative to nondiscrimination in federally assisted programs of the Department of Transportation (hereinafter, "DOT") Title 49, Code of Federal Regulations, Part 21, as they may be amended from time to time, (hereinafter referred to as the Regulations), which are herein incorporated by reference and made a part of this contract.

2. Nondiscrimination. The Consultant, with regard to the work performed by it during the contract, shall not discriminate on the grounds of race, color, or national origin in the selection and retention of subconsultants, including procurements of materials and leases of equipment. The Consultant shall not participate either directly or indirectly in the discrimination prohibited by Section 21.5 of the Regulations, including employment practices when the contract covers a program set forth in Appendix B of the Regulations.

3. Solicitations for Subcontracts, Including, Procurements of Materials and Equipment. In all solicitations either by competitive bidding or negotiation made by the Consultant for work to be performed under a subcontract, including procurements of materials or leases of equipment, each potential subconsultant or supplier shall be notified by the Consultant of the Consultant's obligations under this contract and the Regulations relative to nondiscrimination on the grounds of race, color, or national origin.

4. Information and Reports. The Consultant shall provide all information and reports required by the Regulations or directives issued pursuant thereto and shall permit access to its books, records, accounts, other sources of information and its facilities as may be determined by the sponsor or the Federal Aviation Administration (FAA) to be pertinent to ascertain compliance with such Regulations, orders, and instructions. Where any information required of a Consultant is in the exclusive possession of another who fails or refuses to furnish this information, the Consultant shall so certify to the sponsor or the FAA, as appropriate, and shall set forth what efforts it has made to obtain the information.

5. Sanctions for Noncompliance. In the event the Consultant's noncompliance with the nondiscrimination provisions of this contract, the sponsor shall impose such contract sanctions as may determine to be appropriate, including, but not limited to:

   a. withholding of payments to the Consultant under the contract until the Consultant complies, and/or

   b. cancellation, termination, or suspension of the contract, in whole or in part.

Incorporation of Provisions. The Consultant shall include the provisions of paragraphs 1 through 5 (above) in every subcontract, including procurement of materials and leases of equipment, unless exempt by the Regulations or directives issued pursuant thereto. The Consultant shall take such action with respect to any subcontract or procurement as the sponsor may direct as a means of enforcing such provisions including sanctions for noncompliance. Provided, however, that in the event an Consultant becomes involved in, or is threatened with, litigation with a subconsultant or supplier as a result of such direction, the Consultant may request the sponsor and/or Department to enter into such litigation to protect the interests of the sponsor and, in addition, the Consultant.

DISADVANTAGED BUSINESS ENTERPRISE (DBE) ASSURANCES

1. Policy. It is the policy of the Department of Transportation (DOT) that disadvantaged business enterprises as defined in 49 CFR Part 23 shall have the maximum opportunity to participate in the performance of contracts financed in whole or in part with Federal funds under this agreement. Consequently, the DBE requirements of 49 CFR Part 23 applies to this agreement.

2. DBE Obligation. The Consultant agrees to ensure that disadvantaged business enterprises as defined in 49 CFR Part 23 have the maximum opportunity to participate in the performance of contracts and subcontracts financed in whole or in part with Federal funds provided under this agreement. In this regard, all Consultants shall take all necessary and reasonable steps in accordance with 49 CFR Part 23 to ensure that disadvantaged business enterprises have the maximum opportunity to compete for and perform contracts. Consultants shall not discriminate on the basis of race, color, national origin, or sex in the award and performance of DOT-assisted contracts.

J. OPEN ACCESS TO DOCUMENTS
(Reference: 49 CFR Part 18.36(i); FAA Order 5100.38)
(Public Act 90-0572 Section 20-65; Public Act 87-991)

The Consultant shall maintain, for a minimum of 5 years after the completion of the contract, adequate books, records, and supporting documents to verify the amounts, recipients, and uses of all disbursements of funds passing in conjunction with the contract; the contract and all books, records, and supporting documents related to the contract shall be available for review and audit by the Auditor General; and the Consultant agrees to cooperate fully with any audit conducted by the Auditor General and to provide full access to all relevant materials. Failure to maintain the books, records, and supporting documents required by this Section shall establish a presumption in favor of the State for the recovery of any funds paid by the State under the contract for which adequate books, records, and supporting documentation are not available to support their purported disbursement.

K. CERTIFICATION OF CAPACITY TO CONTRACT
(Public Act 90-0572, Section 50-13)

It is unlawful for any person holding an elective office in this State, holding a seat in the General Assembly, or appointed to or employed in any of the offices of State government, or who is an officer or employee of the Illinois Building Authority or the Illinois Toll Highway Authority, or who is the wife, husband or minor child of any such person, to have or acquire any contract, or any direct pecuniary interest in any contract therein, whether for stationery, printing, paper or for any services, materials or supplies, which will be wholly or partially satisfied by the payment of funds appropriated by the General Assembly of the State of Illinois or in any contract of the Illinois Building Authority or the Illinois Toll Highway Authority. Payments made for a public aid recipient are not payments pursuant to a contract with the State within the meaning of this Section.

It is unlawful for any firm, partnership, association or corporation in which any such person is entitled to receive more than 7 1/2% of the total distributable income to have or acquire any such contract or direct pecuniary interest therein.

It is unlawful for any firm, partnership, association or corporation in which any such person together with his spouse or minor children is entitled to receive more than 15%, in the aggregate, of the total distributable income to have or acquire any such contract or direct pecuniary interest therein.

Nothing in this Section invalidates the provisions of any bond or other security hereto or hereafter offered for sale or sold by or for the State of Illinois.

This Section does not affect the validity of any contract made between the State and an officer or employee of the State or member of the General Assembly, his spouse, minor child or any combination of such persons, if that contract was in existence before his election or employment as such officer, member, or employee. Such a contract is void, however, if it cannot be completed within 6 months after such officer, member, or employee takes office, or is employed.

This Section does not apply to (1) a contract for personal services as a teacher or school administrator between a member of the General Assembly or his spouse, or a State officer or employee or his or her spouse, and any school district, public community, college district, the University of Illinois, Southern Illinois University or any institution under the control of the Board of Governors of State Colleges and Universities or under the control of the Board of Regents or (2) a contract for personal service of a wholly ministerial character including but not limited to services as a laborer, clerk, typist, stenographer, page, bookkeeper, receptionist or telephone switchboard operator, made by a spouse or minor child of an elective or appointive State officer or employee or of a member of the General Assembly or (3) payments made to a member of the General Assembly, a State officer or employee, his or her spouse or minor child acting as a foster parent, homemaker, advocate, or volunteer for or in behalf of a child or family served by the Department of Children and Family Services.

Any person convicted of a violation of this Section shall be guilty of a business offense and shall be fined not less than $1,000 nor more than $5,000.

The appropriate Certification of Capacity to Contract will be executed in Section III.X., of this agreement.

L. THE CONSULTANT SELECTION

(Reference: 49 CFR Part 18; FAA AC 5100-14D or latest revision)
(30 ILCS 535; IDOT-Aeronautics Administrative Bulletin: 2010-02)

The City of DeKalb hereby certifies that it
(Sponsor)
has completed the prescribed qualifications based consultant selection procedures.

The firm of (Crawford, Murphy and Tilly, Inc.) of (Springfield, IL) has
(Consultant) (Location)
been selected to provide the engineering services required for the project on:

July 10, 2017
(Date)

A copy of the executed Retainer Agreement identifying the project covered by this Agreement is included as ATTACHMENT U.

M. AMENDMENTS TO THE AGREEMENT

All effort recorded to document a claim for additional compensation must be delineated separately from the original scope of services with personnel, classifications, dates worked, rates, hours and services thoroughly detailed and clearly identified.

The Department shall be notified of potential amendment requests at the earliest possible opportunity once it has been determined that any of the following three circumstances may exist. Any amendments to the Agreement which increases the fee or the time of performance must contain one of the following written determinations (with support documentation) depending upon the circumstances of the change.

1. The undersigned determine that the circumstances which necessitate this change were not reasonably foreseeable at the time the contract was signed.

2. The undersigned determine that the circumstances which necessitate this change were not within the contemplation of the contract as signed.

3. The undersigned determine that this change is in the best interest of the state of Illinois and is authorized by law.

_____	_____
Date	Sign Name
	_____
	Print Name
	_____
	Title

Any professional services effort performed beyond the not-to-exceed limits expressed in Section II. Consultant Compensation, and for which a future amendment will be sought, will be performed under all Agreement provisions as the original contracted work. The dollar value of such effort is not considered approved for payment until review and approval by the Department.

N. CERTIFICATION OF CONSULTANT

(Public Act 90-0572 Section 50-5)

I hereby certify that I am the Vice President (title) and duly

authorized representative of the firm Crawford, Murphy & Tilly, Inc.,

whose address is 2750 West Washington Street, Springfield, IL 62702,
and that neither I nor the above firm I here represent has:

1. employed or retained for a commission, percentage, brokerage, contingent fee, or other consideration, any firm or person (other than a bona fide employee working solely for me or the above Consultant) to solicit or secure this Agreement,

2. agreed, as an express or implied condition for obtaining this contract, to employ or retain the services of any firm or person in connection with carrying out the Agreement, or

3. paid or agreed to pay to any firm, organization, or person (other than a bona fide employee working solely for me or the above Consultant) any fee, contribution, donation, or consideration of any kind for, or in connection with, procuring or carrying out the contract; except as here expressly stated (if any):

The firm certifies by execution:

1. it has not been convicted of bribery or attempting to bribe an officer or employee of the State of Illinois, nor has the firm made an admission of guilt of such conduct which is a matter of record, nor has an official, agent, or employee of the firm committed bribery or attempted bribery on behalf of the firm and pursuant to the direction or authorization of a responsible official of the firm, nor has the firm been barred from being awarded a contract or subcontract.
2. it has not been barred from contracting with a unit of state or local government as a result of a violation of the Criminal Code of 1961.

I acknowledge that this certification is to be furnished to the Federal Aviation Administration of the United States' Department of Transportation in connection with this contract involving participation of Airport Improvement Program (AIP) funds and is subject to applicable state and Federal laws, both criminal and civil.

February 13, 2023
Date

Sign Name

Douglas J. Klonowski, PE
Print Name

Vice President
Title

O. FEDERAL TAXPAYER IDENTIFICATION NUMBER

The following statement is made under penalty of perjury:

"The Firm's correct Federal Taxpayer Identification Number is 37-0844662
. (I am) (This firm is) doing business as a (please check one):

____ Individual _____ Partnership __X__ Corporation

P. DISADVANTAGED BUSINESS ENTERPRISE (DBE) PARTICIPATION

(Reference: 49 CFR Part 26)

Contract Assurance (§26.13) - The Consultant or subconsultant shall not discriminate on the basis of race, color, national origin, or sex in the performance of this contract. The Consultant shall carry out applicable requirements of 49 CFR Part 26 in the award and administration of DOT assisted contracts. Failure by the Consultant to carry out these requirements is a material breach of this contract, which may result in the termination of this contract or such other remedy, as the recipient deems appropriate.

In keeping with the DBE plan adopted by the Sponsor, the Consultant shall take all necessary and reasonable steps to attain DBE participation in this contract.

The work for each subconsultant should be listed separately. If the subconsultant is being utilized to meet the project DBE goal, they must be prequalified in that category and certified as a DBE in that category. Please indicate that they are certified in that category. The certification list is available on the Department's website on the "Doing Business" menu under Small Business Enterprises and IL UCP directory http://www.dot.il.gov/ucp/ucp.html#DBE Directory. The percent of work is computed based on the individual subconsultant's work effort in each category

Firm Name: N/A

Subcontract Amount ($): N/A

Prequalification Category	% of Work	DBE Certification

If more than one subconsultant is being used, attach additional sheets.

NOTE: All final payment requests shall include a completed ATTACHMENT O - DBE Final Documentation or the complete information on the Consultant's format.

Q. DISCRIMINATION
(Reference: 49 CFR Part 21; FAA AC 150/5100-15A or latest revision)
(Executive Order 11246 of September 24, 1965; 41 CFR Part 60)

The Consultant agrees not to commit unlawful discrimination in employment in Illinois and further agrees to take affirmative action to ensure that no unlawful discrimination is committed.

R. DUES/FEES TO CLUBS WHICH DISCRIMINATE
(775 ILCS 25/2 Source: P.A. 85-909)

The Consultant of the business entity certifies that it is not prohibited from selling goods or services to the State of Illinois because it pays dues or fees on behalf of its employees or agent or subsidizes or otherwise reimburses them for payment of their dues or fees to any club which unlawfully discriminates.

S. CONFLICT OF INTEREST
(Public Act 90-0572 Section 50-13)

The Consultant agrees to comply with the provision of the Illinois Public Act prohibiting conflict of interest and all the terms, conditions and provisions of those Sections apply to this contract and are made a part of this contract the same as though they were incorporated and included herein.

T. FELONY CONVICTION
(Public Act 90-5072 Section 50-10)

The Consultant certifies that if he/she or the business entity has been convicted of a felony, at least five years has passed since the completion of the sentence as of the contract date.

U. ILLINOIS HUMAN RIGHTS NUMBER

The Consultant must have an Illinois Department of Human Rights prequalification number, or have an application on file with the Illinois Department of Human Rights office at the State of Illinois Center, Suite 10-100, 100 West Randolph, Chicago, Illinois 60601 (refer to Department of Human Rights form).

(#IDHR PC-1/IL 442-0010). IDHR # 93788-00.

V. EDUCATIONAL LOAN DEFAULT
(5 ILCS 385).

The Consultant certifies that, if this agreement is with an individual or individuals, that he/she is not in default on an educational loan.

W. DRUG FREE WORKPLACE
(30 ILCS 580).

If the Consultant has 25 or more employees, the following certification shall apply and, by signing this document, the Consultant certifies as follows:

1. The Consultant certifies that he will provide a drug free workplace in compliance with the Drug Free Workplace Act ("Act"). Specifically, Consultant certifies he will do the following:

    a. Publish a statement:
        i. Notifying employees that the unlawful manufacture, distribution, dispensation, possession, or use of a controlled substance, including cannabis, is prohibited in the Consultants workplace.
        ii. Specifying the actions that will be taken against employees for violations of such prohibition.
        iii. Notifying the employee that, as a condition of employment on this agreement, the employee will:
            1) abide by the terms of the statement; and
            2) notify the employer of any criminal drug statute conviction for a violation occurring in the workplace no later than 5 days after such conviction.
    b. Establish a drug free awareness program to inform employees about:
        i. the dangers of drug abuse in the workplace;
        ii. the Consultant policy of maintaining a drug free workplace;
        iii. any available drug counseling, rehabilitation, and employee assistance programs; and
        iv. the penalties that may be imposed upon employees for drug violations.
    c. Give a copy of the statement described above to each employee engaged in the performance of the contract and post the statement in a prominent place in the workplace.
    d. Notify the State within 10 days after receiving notice under part (a)(3)(B) above from an employee or otherwise receiving actual notice of such conviction.
    e. Impose a sanction on, or require the satisfactory participation in a drug abuse assistance or rehabilitation program by, any employee who is so convicted, as required by §5 of the Act.
    f. Assist employees in selecting a course of action in the event drug counseling, treatment, and rehabilitation is required and indicate that a trained referral team is in place.
    g. Make a good faith effort to continue to maintain a drug free workplace through implementation of §3 of the Act.

If an individual, the Consultant further certifies that he will not engage in the unlawful manufacture, distribution, dispensation, possession, or use of a controlled substance in the performance of the agreement.

X. CAPACITY TO CONTRACT
(Public Act 90-0572)

The Consultant certifies that the Corporation's certificate of Authority to do business in Illinois, is in good standing with the Secretary of State's Office.

CERTIFICATION OF CAPACITY TO CONTRACT

Public Act 90-0572 prohibits certain persons and entities from having or acquiring any contract with the State of Illinois and from having or acquiring any direct pecuniary interests in any contract with the State of Illinois, whether for materials, services, supplies, printing or stationery. This prohibition does not extend to certain contracts for personal services of a ministerial nature as provided for in the Act.

(Corporation)

The undersigned, being a duly authorized representatives of Crawford, Murphy and Tilly, Inc., a corporation, hereby certify that they have read Public Act 90-0572 Section 50-13 and that they have checked the records of the corporation and that no person who is entitled to receive individually more than 7 1/2% of the total distributable income of the corporation, or together with their spouse or minor child more than 15% of the total distributable income of the corporation, is (i) an elected State official, a member of the General Assembly, an appointed State officer, a State employee; (ii) an officer or employee of the Illinois Toll Highway Authority or of the Illinois Building Authority; or (iii) a spouse or a minor child of any such enumerated person.

13th day of **February**, AD, 20**23**

BY _____

Daniel L. Pape, PE, Aviation Group Mgr.
Printed Name & Title

Crawford, Murphy & Tilly, Inc.
Corporation

BY _____, PE

Douglas J. Klonowski, PE, Vice President
Printed Name & Title

CERTIFICATION OF CAPACITY TO CONTRACT

Public Act 90-0572 prohibits certain persons and entities from having or acquiring any contract with the State of Illinois and from having or acquiring any direct pecuniary interests in any contract with the State of Illinois, whether for materials, services, supplies, printing or stationery. This prohibition does not extend to certain contracts for personal services of a ministerial nature as provided for in the Act.

(Partnerships and Non-Corporate Firms and Associations)

The undersigned, being each and every one of the partners/members/associates/(other) of

N/A, hereby certify on behalf of themselves individually, that they have read Public Act 90-0572 Section 50-13 and that (i) they are not an elected State official, a member of the General Assembly, an appointed State officer, a State employee; an officer or employee of the Illinois Toll Highway Authority or of the Illinois Building Authority; nor a spouse or minor child of any such enumerated person; or (ii) that they are such an enumerated person but that they are not entitled to receive individually more than 7 1/2% of the total distributable income of the partnership/firm/association, or together with their spouse or a minor child more than 15% of the total distributable income of the partnership/firm/association.

_____day of_____ , AD, 20_____

BY _____ BY _____

_____ _____

Printed Name & Title Printed Name & Title

d/b/a _____

(Name)

CERTIFICATION OF CAPACITY TO CONTRACT

Public Act 90-0572 prohibits certain persons and entities from having or acquiring any contract with the State of Illinois and from having or acquiring any direct pecuniary interests in any contract with the State of Illinois, whether for materials, services, supplies, printing or stationery. This prohibition does not extend to certain contracts for personal services of a ministerial nature as provided for in the Act.

(Individual Consultants)

I, _____**N/A**_____,
(Name)

hereby certify that I have read Public Act 90-0572 Section 50-13 and I further certify (i) that I am not an elected State official, a member of the General Assembly, an appointed State officer, a State employee; (ii) that I am not an officer or employee of the Illinois Toll Highway Authority or of the Illinois Building Authority; and (iii) that I am not a spouse or a minor child of any such official, member, officer or employee.

____day of_____, AD, 20_____

BY _____

_____
Printed Name & Title

d/b/a _____
(Name)

Y. CERTIFICATION REGARDING LOBBYING

(Reference: 49 CFR Part 20, Appendix A)

Certification for Contracts, Grants, Loans and Cooperative Agreements.

The Consultant certifies compliance with Section 319 of Public Law 101-102 and to the best of his or her knowledge and belief, that:

1. No Federal appropriated funds have been paid or will be paid, by or on behalf of the undersigned, to any person for influencing or attempting to influence an officer or employee of any agency, a Member of Congress, an Officer or employee of Congress, or an employee of a Member of Congress in connection with the awarding of any Federal contract, the making of any Federal grant, the making of any Federal loan, the entering into of any cooperative agreement, and the extension, continuation, renewal, amendment, or modification of any Federal contract, grant, loan, or cooperative agreement.

2. If any funds other than Federal appropriated funds have been paid or will be paid to any person for influencing or attempting to influence an officer or employee of any agency, a Member of Congress, an officer or employee of Congress, or an employee of a Member of Congress in connection with this Federal contract, grant, loan, or cooperative agreement, the undersigned shall complete and submit Standard Form-LLL, "Disclosure Form to Report Lobbying", in accordance with its instructions.

3. The undersigned shall require that the language of this certification be included in the award documents for all sub-awards at all tiers (including subcontracts, sub-grants, and contracts under grants, loans, and cooperative agreements) and that all sub-recipients shall certify and disclose accordingly.

   This certification is a material representation of fact upon which reliance was placed when this transaction was made or entered into. Submission of this certification is a prerequisite for making or entering into this transaction imposed by Section 1352, Title 31, US Code. Any person who fails to file the required certification shall be subject to a civil penalty of not less than $10,000 and not more than $100,000 for each such failure.

Z. INTERNATIONAL BOYCOTT

(Applicable to contracts in excess of $10,000):

The Consultant certifies that neither it nor any substantially-owned affiliated company is participating or shall participate in an international boycott in violation of the provisions of the U.S. Export Administration Act of 1979 or the regulations of the U.S. Department of Commerce promulgated under that Act. The Consultant makes the certification set forth in Section 5 of the International Anti-Boycott Certification Act.

AA. NON-APPROPRIATION CLAUSE

Obligations of the State will cease immediately without penalty or further payment being required in any fiscal year the Illinois General Assembly fails to appropriate or otherwise make available sufficient funds for payment of this Agreement.

BB. DEBT CERTIFICATION

The Consultant certifies that it, or any affiliate, is not barred from being awarded a contract under 30 ILCS 500/50-11 and 50-12. The Consultant further acknowledges that the contracting State agency may declare the contract void if the preceding certification is false or if the contractor, or any affiliate, is determined to be delinquent in the payment of *any* debt to the State during the term of the contract.

CC. GOODS FROM CHILD LABOR ACT

The Consultant certifies in accordance with Public Act 94-0264 tha1 no foreign made equipment, materials, or supplies furnished to the State under the contract have been produced in whole or in part by the labor of any child under the age of 12.

DD. QUALIFICATION BASED SELECTION ACT

(Reference: 49 CFR Part 18.36; FAA Order 5100.38; FAA AC 150/5100-14 (latest))

The parties hereby certify that there was compliance with the provisions of the State of Illinois' Architectural, Engineering and Land Surveying Qualifications Based Selection Act, Chapter 30 ILCS 535 in the procurement of the services covered by this Agreement.

EE. CERTIFICATION REGARDING DEBARMENT, SUSPENSION, INELIGIBILITY AND VOLUNTARY EXCLUSION

(Reference: 49 CFR Part 29; FAA Order 5100.38)

The Consultant certifies, by submission of this proposal or acceptance of this contract, that neither it nor its principals is presently debarred, suspended, proposed for debarment, declared ineligible, or voluntarily excluded from participation in this transaction by any Federal department or agency. It further agrees by submitting this Agreement that it will include this clause without modification in all lower tier transactions, solicitations, proposals, contracts, and subcontracts. Where the Consultant or any lower tier participant is unable to certify to this statement, it shall attach an explanation to this solicitation/proposal.

FF. RIGHTS TO INVENTIONS

(Reference: 49 CFR Part 18.36(i)(8); FAA Order 5100.38)

All rights to inventions and materials generated under this contract are subject to regulations issued by the FAA and the Sponsor of the Federal grant under which this contract is executed.

GG. TRADE RESTRICTION CLAUSE

(Reference: 49 CFR Part 30.13; FAA Order 5100.38)

The Consultant or subconsultant, by submission of an offer and/or execution of a contract, certifies that it:

1. is not owned or controlled by one or more citizens of a foreign country included in the list of countries that discriminate against U.S. firms published by the Office of the United States Trade Representative (USTR);

2. has not knowingly entered into any contract or subcontract for this project with a person that is a citizen or national of a foreign country on said list, or is owned or controlled directly or indirectly by one or more citizens or nationals of a foreign country on said list;

3. has not procured any product nor subcontracted for the supply of any product for use on the project that is produced in a foreign country on said list.

Unless the restrictions of this clause are waived by the Secretary of Transportation in accordance with 49 CFR 30.17, no contract shall be awarded to a Consultant or subconsultant who is unable to certify to the above. If the Consultant knowingly procures or subcontracts for the supply of any product or service of a foreign country on said list for use on the project, the Federal Aviation Administration may direct through the Sponsor cancellation of the contract at no cost to the Government.

Further, the Consultant agrees that, if awarded a contract resulting from this solicitation, it will incorporate this provision for certification without modification in each contract and in all lower

tier subcontracts. The Consultant may rely on the certification of a prospective subconsultant unless it has knowledge that the certification is erroneous.

The Consultant shall provide immediate written notice to the sponsor if the Consultant learns that its certification or that of a subconsultant was erroneous when submitted or has become erroneous by reason of changed circumstances. The subconsultant agrees to provide written notice to the contractor if at any time it learns that its certification was erroneous by reason of changed circumstances.

This certification is a material representation of fact upon which reliance was placed when making the award. If it is later determined that the Consultant or subconsultant knowingly rendered an erroneous certification, the Federal Aviation Administration may direct through the Sponsor cancellation of the contract or subcontract for default at no cost to the Government.

Nothing contained in the foregoing shall be construed to require establishment of a system of records in order to render, in good faith, the certification required by this provision. The knowledge and information of a contractor is not required to exceed that which is normally possessed by a prudent person in the ordinary course of business dealings.

This certification concerns a matter within the jurisdiction of an agency of the United States of America and the making of a false, fictitious, or fraudulent certification may render the maker subject to prosecution under Title 18, United States Code, Section 1001.

HH. BREACH OF CONTRACT TERMS
(Reference: 49 CFR Part 18.36)

Any violation or breach of terms of this contract on the part of the Consultant or their subconsultants may result in the suspension or termination of this contract or such other action that may be necessary to enforce the rights of the parties of this agreement. The duties and obligations imposed by the Contract Documents and the rights and remedies available thereunder shall be in addition to and not a limitation of any duties, obligations, rights and remedies otherwise imposed or available by law.

Policies and procedures for procurement of professional services are established in Federal Regulation Title 49 CFR Part 18, Uniform Administrative Requirements for Grants and Cooperative Agreements. The Airport and Airway Improvement Act (AAIA) of 1982, as amended, serves as the enabling legislation. The parties agree that these policies and procedures have been followed.

IN WITNESS WHEREOF, the parties hereto have affixed their hand and seals at

DeKalb, Illinois, this **February 13**, 20**23**.
(city) (date) (year)

ATTEST:

(SEAL)

CITY OF DEKALB STATE OF ILLINOIS

City of DeKalb
(Sponsor Name)

36-6005843
(Federal Employee's Identification Number)

BY

Ruth A. Scott - Exec. Asst.
Printed Name & Title

BY

Bill Nicklas - City Manager
Printed Name & Title

ATTEST

(SEAL)

CRAWFORD, MURPHY & TILLY, INC. CORPORATE SEAL 1963 DELAWARE

CRAWFORD, MURPHY & TILLY, INC.
(Consultant Name)

37-0844662
(Federal Employee's Identification Number)

BY

Daniel L. Pape, PE, Aviation Group Mgr.
Printed Name & Title

BY

Douglas J. Klonowski, PE, Vice President
Printed Name & Title

LIST OF ATTACHMENTS

ATTACHMENT A / A1 –	**PRELIMINARY ASSESSMENT AND SCHEMATIC DESIGN PHASE SERVICES** ESTIMATE OF COSTS / SALARY EXPENSES
ATTACHMENT B / B1 –	**DESIGN PHASE SERVICES** ESTIMATE OF COSTS / SALARY EXPENSES
ATTACHMENT C / C1 –	**CONSTRUCTION PHASE SERVICES** ESTIMATE OF COSTS / SALARY EXPENSES
ATTACHMENT D / D1 –	**PLANNING AND SPECIAL SERVICES** ESTIMATE OF COSTS / SALARY EXPENSES
ATTACHMENT E –	**ENGINEERING REPORT (General Guidance)**
ATTACHMENT F –	**RESIDENT ENGINEER'S DIARY (Standard Format)**
ATTACHMENT G –	**COST PLUS FIXED PAYMENT INVOICE (Standard Format)**
ATTACHMENT H –	**LUMP SUM INVOICE (Standard Format)**
ATTACHMENT I –	**EFFORT DETAIL BREAKDOWN (Standard Format)**
ATTACHMENT J –	**TESTING SCHEDULE**
ATTACHMENT K –	**TESTING RATES & COST SUMMARY**
ATTACHMENT L –	**SUMMARY OF PAYROLL BURDEN AND FRINGE COSTS**
ATTACHMENT M –	**SUMMARY OF OVERHEAD AND INDIRECT COSTS**
ATTACHMENT N –	**PROJECT CERTIFICATION**
ATTACHMENT O –	**DBE FINAL DOCUMENTATION**
ATTACHMENT P –	**PROJECT SKETCH**
ATTACHMENT Q –	**PROJECT LETTING SCHEDULE**
ATTACHMENT R –	**OP&P PROGRAM LETTER**
ATTACHMENT S –	**CURRENT IDOT PROVISIONAL PAYROLL BURDEN / FRINGE EXPENSE AND GENERAL / ADMINISTRATIVE EXPENSE RATE LETTER**
ATTACHMENT T –	**CONSULTANT'S PRELIMINARY ESTIMATE OF PROBABLE CONSTRUCTION COSTS**
ATTACHMENT U –	**RETAINER AGREEMENT**

ATTACHMENT A

PRELIMINARY ASSESSMENT AND SCHEMATIC DESIGN PHASE SERVICES

ESTIMATE OF COSTS

Category	Amount ($)	
1. Direct Salary Costs	_____	(ATTACHMENT A-1)
2. Labor and General and Administrative Overhead[1]	_____	
3. Direct Nonsalary Expenses		
Lodging[2,3]	_____	
Meals/Per Diem[2,3]	_____	
Transportation[2]	_____	
Materials & Supplies	_____	
Printing	_____	
CADD time[4]	_____	
Other Costs (excluding outside services)	_____	
4. Fixed Payment[5]	_____	
5. Outside Services	_____	
Lump Sum **Total Amount Not to Exceed**	$ _____	

Estimated cost of total professional design phase services from TIP: $_____

NOTES:

1/ A letter from IDOT with approval or provisional payroll burden / fringe and general / administrative expense rates must be attached (ATTACHMENT S) for verification of rates.
2/ Current approved rates established by State of Illinois - Governors Travel Control Board.
3/ Shall not be used in calculation of fixed payment amount.
4/ Maximum CADD rate shall be $15.00/hour.
5/ Fixed Payment (Profit) = (14.5%) x [Direct Salary Costs + (OH&B) x (Direct Salary Costs) + Transportation + Materials & Supplies + Printing + CADD time + Other Costs (excluding outside services)].

ATTACHMENT A-1

PRELIMINARY ASSESSMENT AND SCHEMATIC DESIGN PHASE SERVICES

ESTIMATE OF SALARY EXPENSES

Classification*	Hours	$Rate/Hour	Cost ($)
Principal			
Vice Principal			
Project Manager			
Senior Project Engineer			
Senior Project Architect			
Project Engineer			
Project Architect			
Senior Engineer			
Senior Architect			
Engineer			
Planner			
Registered Land Surveyor			
Land Surveyor			
Senior Engineering Technician			
Engineering Technician			
Engineering Assistant			
CADD/Draftsman/Technician			
Clerical			
Total	(hours)	(average)	$ (total direct salary costs) (ATTACHMENT A)

*Classifications may be adjusted as per Consultant's work force.

ATTACHMENT B

DESIGN PHASE SERVICES

DeKalb Taylor Municipal Airport

Remove & Replace a Portion of the Aircraft Parking Apron

Attachment B
Preliminary Design and Design Phase
ESTIMATE OF COSTS

	CATEGORY			AMOUNT
1	Direct Salary Costs			$27,361.46
2	Labor and General and Administrative Overhead[1]	54.69%		$14,963.98
3	Direct Nonsalary Expenses	112.14%		$30,683.14
	Lodging[2,3]		$	-
	Meals/Per Diem[2,3]		$	-
	Transportation[2]		$	342.50
	Materials & Supplies		$	-
	Printing		$	300.00
	CADD time[4]		$	-
	Other Costs (Excluding outside Services)		$	150.00
4	Fixed Payment[5]			$10,700.00
5	Outside Services/Subconsultants			$7,700.00
	Geotechnical Investigation	$7,700.00		
	Cost Plus Fixed Payment			$92,201.08
	Total Amount Not to Exceed			
Or		**Use =**		$92,200.00

Estimated Construction Cost: $ **770,000.00** (ATTACHMENT T)

Attach a sketch labeled ATTACHMENT P in sufficient detail to clearly delineate the proposed areas of work.

NOTES:

1/ A letter from IDOT with approval or provisional payroll burden / fringe and general / administrative expense rates must be attached (ATTACHMENT S) for verification of rates.
2/ Current approved rates established by State of Illinois - Governors Travel Control Board.
3/ Shall not be used in calculation of fixed payment amount.
4/ Maximum CADD rate shall be $15.00/hour.
5/ Fixed Payment (Profit) = (14.5%) x [Direct Salary Costs + (OH&B) x (Direct Salary Costs) + Transportation + Materials & Supplies + Printing + CADD time + Other Costs (excluding outside services)].

ATTACHMENT B-1

DESIGN PHASE SERVICES

ESTIMATE OF SALARY EXPENSES

CLASSIFICATION	TIME REQUIRED (HOURS)	HOURLY WAGE	SALARY EXPENSE
PRINCIPAL	0	$78.00	$0.00
PROJECT ENGINEER II	73	$78.00	$5,694.00
PROJECT ARCHITECT II	0	$66.69	$0.00
PROJECT MANAGER II	9	$75.74	$681.66
PROJECT ENVIRONMENTAL SCIENTIST II	0	$74.85	$0.00
PROJECT STRUCTURAL ENGINEER II	0	$78.00	$0.00
PROJECT ENGINEER I	0	$63.00	$0.00
PROJECT MANAGER I	0	$60.91	$0.00
PROJECT ENVIRONMENTAL SCIENTIST I	0	$64.78	$0.00
PROJECT STRUCTURAL ENGINEER I	0	$62.98	$0.00
SENIOR ENGINEER I	188	$46.69	$8,777.72
SENIOR ARCHITECT II	0	$55.21	$0.00
TECHNICAL MANAGER II	0	$53.60	$0.00
SENIOR PLANNER I	0	$44.97	$0.00
GIS SPECIALIST	0	$44.12	$0.00
ENVIRONMENTAL SCIENTIST III	0	$49.30	$0.00
SENIOR STRUCTURAL ENGINEER II	0	$61.73	$0.00
SENIOR STRUCTURAL ENGINEER I	0	$46.79	$0.00
ENGINEER I	128	$35.40	$4,531.20
SENIOR ARCHITECT I	0	$35.77	$0.00
ENVIRONMENTAL SCIENTIST II	0	$43.08	$0.00
STRUCTURAL ENGINEER I	0	$35.30	$0.00
PLANNER I	0	$35.45	$0.00
ENVIRONMENTAL SCIENTIST I	0	$29.55	$0.00
TECHNICAL MANAGER I	0	$31.58	$0.00
LAND SURVEYOR	0	$47.34	$0.00
SENIOR TECHNICIAN II	120	$55.13	$6,615.60
SENIOR TECHNICIAN I	24	$44.22	$1,061.28
TECHNICIAN II	0	$36.46	$0.00
TECHNICIAN I	0	$30.78	$0.00
PROJECT ADMINISTRATIVE ASSISTANT	0	$28.99	$0.00
ADMINISTRATIVE/ACCOUNTING ASSISTANT	0	$22.72	$0.00
		AVERAGE	
TOTAL	**542**	**$50.48**	**$27,361.46**

*Classifications may be adjusted as per Consultant's work force.

DeKalb Taylor Municipal Airport

Remove & Replace a Portion of the Aircraft Parking Apron

Attachment B-2

Preliminary Design and Design Phase
Estimated Cost Breakdown Items 4, 5, 6 & 7

Item						
4	**MATERIALS AND SUPPLIES**					
	Surveying Supplies (paint, lathe, stakes, etc)			$ -		
	Drafting Media			$ -		
	Misc. Equipment and Direct Project Supplies			$ -		
			Sub-Total		**$**	**-**
5	**TRAVEL**					
	Travel Reimbursement	500	miles@ $ 0.625	$ 312.50		
	Vehicle Days		days@ $ 65.00	$ -		
	Other Subsistence & Tolls			$ 30.00		
			Sub-Total		**$**	**342.50**
	Lodging (Not in Fixed Fee comp.)	0 days @	$ 100.00	$ -	**$**	**-**
6	**PRINTING**					
	Full Size Prints	100 sheets@	$ 2.40	$ 240.00		
	Photo-copies	300 sheets@	$ 0.20	$ 60.00		
			Sub-Total		**$**	**300.00**
7	**OTHER COSTS (EXCLUDING OUTSIDE SERVICES)**					
	Photos/Developing			$ -		
	Direct Project Shipping Expense			$ 150.00		
	Unassigned Misc Project Direct Expense	Misc.		$ -		
			Sub-Total		**$**	**150.00**
					$	**792.50**

ATTACHMENT B-3
(Sheet 1 of 3)

DeKalb Taylor Municipal Airport

Remove & Replace a Portion of the Aircraft Parking Apron

Attachment B-3
Cost Estimate of Consultant Services (By Task)

Phase #	Element of Work	Hours	Ave Hourly Rate	Total Direct Labor	% of Total Labor	Principal	Project Engineer II	Project Manager II	Project Engineer I	Senior Engineer I	Engineer I	Land Surveyor	Senior Technician II	Senior Technician I	Project Administrative Assistant
Design Phase (Per Section I.B. of Agreement)															
1000	Preliminary Assessment and Schematic Design	198	$48.12	$9,527.60	34.82%	0	24	1	0	63	59	0	27	24	0
1100	**Preliminary Work Items**	44	$50.21	$2,209.40	8.07%	0	10	0	0	20	14	0	0	0	0
1110	Scope Refinement and Project Definition	12	$53.36	$640.36	2.34%	0	4	0	0	4	4	0	0	0	0
1120	Site Visit/Review by Design Team	16	$41.05	$656.72	2.40%	0	0	0	0	8	8	0	0	0	0
1130	Pre-Design Meeting and Preparation	12	$62.35	$748.14	2.73%	0	6	0	0	6	0	0	0	0	0
1140	Review Record Drawings and Available Data	4	$41.05	$164.18	0.60%	0	0	0	0	2	2	0	0	0	0
1200	**Surveys/Field Investigations/Verify Existing Cond.**	44	$40.21	$1,769.28	6.47%	0	0	0	0	0	20	0	0	24	0
1210	Topo/Cross-Section Survey Field Work	40	$39.81	$1,592.40	5.82%	0	0	0	0	0	20	0	0	20	0
1220	Office Download of Field Data/Reduce Surveys & Prepare Models	4	$44.22	$176.88	0.65%	0	0	0	0	0	0	0	0	4	0
1300	**Prel. Plan Concept Develop (35% Design Report)**	97	$51.35	$4,980.64	18.20%	0	14	0	0	37	19	0	27	0	0
1310	General Scope Refinement Development/Overall Limits	12	$56.65	$679.82	2.48%	0	4	0	0	4	2	0	2	0	0
1311	Pavement History Research and Review	2	$35.40	$70.80	0.26%	0	0	0	0	0	2	0	0	0	0
1312	Sequence of Construction Concepts/Layouts	2	$50.91	$101.82	0.37%	0	0	0	0	1	0	0	1	0	0
1313	Existing Conditions Validation/Review	5	$56.33	$281.64	1.03%	0	1	0	0	2	0	0	2	0	0
1314	Preliminary Typical Sections/Rehab Details	6	$45.74	$274.44	1.00%	0	0	0	0	2	2	0	2	0	0
1315	Prelim. Geometric Plan	9	$49.54	$445.82	1.63%	0	1	0	0	4	2	0	2	0	0
1316	Prelim. Pavement Design and Matl. Selection Detail/Justifications	9	$49.54	$445.82	1.63%	0	1	0	0	4	2	0	2	0	0
1317	Prelim. Profile, Grading Plans and Concept	9	$49.54	$445.82	1.63%	0	1	0	0	4	2	0	2	0	0
1318	Prelim. Drainage Concept, Impacts and Features and Prelim. Pipe Sizing and Route Plans	4	$53.81	$215.22	0.79%	0	1	0	0	1	1	0	1	0	0
1319	Prelim. Lighting/Electrical Design Concept/Scope.	0	$0.00	$0.00	0.00%	0	0	0	0	0	0	0	0	0	0
1320	Miscellaneous Design Features: Fencing, Turfing and Marking Design & Layout	2	$50.91	$101.82	0.37%	0	0	0	0	1	0	0	1	0	0
1321	Utility Impacts, Delineations and Relocations Design Considerations.	5	$56.33	$281.64	1.03%	0	1	0	0	2	0	0	2	0	0
1322	Review and Evaluations of FAA Mods to Standards and Special Considerations	0	$0.00	$0.00	0.00%	0	0	0	0	0	0	0	0	0	0
1323	Review/Discuss Local Code Conditions/Requirements and Impacts to the Project	0	$0.00	$0.00	0.00%	0	0	0	0	0	0	0	0	0	0
1324	Exhibits Preparation & Development in Support of Preliminary Design Report	28	$49.52	$1,386.60	5.07%	0	2	0	0	10	6	0	10	0	0
1325	Agency Coordination/Soils Investigation & Coord. & Discussion of Soils Impact on Design and Construction	4	$62.35	$249.38	0.91%	0	2	0	0	2	0	0	0	0	0
1400	**Preliminary Identification & List of Expected Specifications**	0	$0.00	$0.00	0.00%	0	0	0	0	0	0	0	0	0	0
1500	**Prel. Opinion of Probable Cost, Quantity Evaluations, Computations and Funding Review; Preliminary Estimate of Time**	13	$43.71	$568.28	2.08%	0	0	1	0	6	6	0	0	0	0

ATTACHMENT B-3
(Sheet 2 of 3)

DeKalb Taylor Municipal Airport

Remove & Replace a Portion of the Aircraft Parking Apron

Attachment B-3
Cost Estimate of Consultant Services (By Task)

Phase #	Element of Work	Hours	Ave Hourly Rate	Total Direct Labor	% of Total Labor	Principal	Project Engineer II	Project Manager III	Project Engineer I	Senior Engineer I	Engineer I	Land Surveyor	Senior Technician II	Senior Technician I	Project Administrative Assistant
Design Phase (Per Section I.B. of Agreement)															
2000	Plan and Document Development - Detailed Design (35% to 80% Level)	218	$49.77	$10,849.18	39.65%	0	24	-	-	82	52	-	60	-	-
2100	**Review and Resolve Prelim Design Issues From Design Report Stage**	4	$62.35	$249.38	0.91%	0	2	0	0	2	0	0	0	0	0
2110	Review 35% Design Report with Owner/IDA/FAA - conference call if needed	2	$62.35	$124.69	0.46%	0	1	0	0	1	0	0	0	0	0
2120	Resolve Outstanding Issues from 35% Report Review	2	$62.35	$124.69	0.46%	0	1	0	0	1	0	0	0	0	0
2200	**Plan Set/Drawing Development**	184	$48.42	$8,909.96	32.56%	0	16	0	0	68	52	0	48	0	0
2210	Cover/Summary of Quantities/General Items	12	$49.55	$594.62	2.17%	0	2	0	0	4	4	0	2	0	0
2211	Sequence of Construction/Phasing Plan	12	$49.55	$594.62	2.17%	0	2	0	0	4	4	0	2	0	0
2212	Existing Conditions/Prop Removal/Pavement Rehab. Details/SWPPP	10	$52.38	$523.82	1.91%	0	2	0	0	4	2	0	2	0	0
2213	Utility Plan and Relocation Plan (As necessary)	0	$0.00	$0.00	0.00%	0	0	0	0	0	0	0	0	0	0
2214	Proposed Improvement Plan and Geometry Plan	26	$50.85	$1,322.08	4.83%	0	4	0	0	10	6	0	6	0	0
2215	Typical Sections/Cross Section Develop.	16	$42.10	$673.60	2.46%	0	0	0	0	6	8	0	2	0	0
2216	Pavement Design/Geometry/Paved Shldr. Mods	8	$41.05	$328.36	1.20%	0	0	0	0	4	4	0	0	0	0
2217	Plan and Profile Plan Sheets	0	$0.00	$0.00	0.00%	0	0	0	0	0	0	0	0	0	0
2218	Drainage and Edge Drain Design	0	$0.00	$0.00	0.00%	0	0	0	0	0	0	0	0	0	0
2219	Underdrain Plan and Details	18	$50.47	$908.52	3.32%	0	2	0	0	6	4	0	6	0	0
2220	Grading and Intersection Staking Plan	26	$50.61	$1,315.80	4.81%	0	2	0	0	10	4	0	10	0	0
2221	PCC Jointing Plan and Details/Transition Details	16	$47.03	$752.52	2.75%	0	0	0	0	6	4	0	6	0	0
2222	Edge Lighting/Apron Lighting Design/Electrical Design/Vault Improvements	0	$0.00	$0.00	0.00%	0	0	0	0	0	0	0	0	0	0
2223	Earthwork Distribution and Cross Sections	22	$46.68	$1,026.96	3.75%	0	0	0	0	8	6	0	8	0	0
2224	Restoration and Landscaping Plan	11	$46.97	$516.62	1.89%	0	1	0	0	4	4	0	2	0	0
2225	Misc Design Elements (e.g. Marking, Fencing, etc.)	7	$50.35	$352.44	1.29%	0	1	0	0	2	2	0	2	0	0
2300	**Development of Technical Specifications**	14	$54.78	$766.92	2.80%	0	2	0	0	6	0	0	6	0	0
2400	**Quantity Computations, Development of Opinion of Prob. Cost and Estimate of Contract Time**	16	$57.68	$922.92	3.37%	0	4	0	0	6	0	0	6	0	0
2410	Quantity Computations	8	$57.68	$461.46	1.69%	0	2	0	0	3	0	0	3	0	0
2420	Cost Estimate Preparation and Development	4	$64.46	$257.82	0.94%	0	2	0	0	1	0	0	1	0	0
2430	Estimate of Time Preparation and Development	2	$50.91	$101.82	0.37%	0	0	0	0	1	0	0	1	0	0
2440	Prepare DBE Goals and Estimate	2	$50.91	$101.82	0.37%	0	0	0	0	1	0	0	1	0	0

ATTACHMENT B-3
(Sheet 3 of 3)

DeKalb Taylor Municipal Airport

Remove & Replace a Portion of the Aircraft Parking Apron

Attachment B-3
Cost Estimate of Consultant Services (By Task)

Phase #	Element of Work	Hours	Ave Hourly Rate	Total Direct Labor	% of Total Labor	Principal	Project Engineer II	Project Manager II	Project Engineer I	Senior Engineer I	Engineer I	Land Surveyor	Senior Technician II	Senior Technician I	Project Administrative Assistant
Design Phase (Per Section I.B. of Agreement)															
3000	Plan and Document Development - Final Design (80% - 100%)	79	$51.07	$4,034.82	14.75%	0	10	0	0	30	15	0	24	0	0
3100	Review and Resolve Prelim Design Issues From	8	$62.35	$498.76	1.82%	0	4	0	0	4	0	0	0	0	0
3110	Review of 80% Design Documents with IDA/FAA	4	$62.35	$249.38	0.91%	0	2	0	0	2	0	0	0	0	0
3120	Comment Resolution From Agency 80% Review	4	$62.35	$249.38	0.91%	0	2	0	0	2	0	0	0	0	0
3200	Development of Final Issued for Bid Set of Plans	55	$48.50	$2,667.32	9.75%	0	4	0	0	19	15	0	17	0	0
3210	Cover/Summary of Quantities/General Items	11	$46.97	$516.62	1.89%	0	1	0	0	4	4	0	2	0	0
3211	Sequence of Construction/Phasing Plan	7	$50.35	$352.44	1.29%	0	1	0	0	2	2	0	2	0	0
3212	Existing Conditions/Prop Removal/Pavement Rehab. Details/SWPPP	4	$53.81	$215.22	0.79%	0	1	0	0	1	1	0	1	0	0
3213	Utility Plan and Relocation Plan (As necessary)	0	$0.00	$0.00	0.00%	0	0	0	0	0	0	0	0	0	0
3214	Proposed Improvement Plan and Geometry Plan	5	$43.86	$219.31	0.80%	0	0	0	0	2	2	0	1	0	0
3215	Typical Sections/Cross Section Develop.	3	$45.74	$137.22	0.50%	0	0	0	0	1	1	0	1	0	0
3216	Pavement Design/Geometry/Paved Shldr. Mods	0	$0.00	$0.00	0.00%	0	0	0	0	0	0	0	0	0	0
3217	Plan and Profile Plan Sheets	0	$0.00	$0.00	0.00%	0	0	0	0	0	0	0	0	0	0
3218	Drainage and Edge Drain Design	0	$0.00	$0.00	0.00%	0	0	0	0	0	0	0	0	0	0
3219	Underdrain Plan and Details	4	$48.09	$192.35	0.70%	0	0	0	0	1	1	0	2	0	0
3220	Grading and Intersection Staking Plan	7	$50.35	$352.44	1.29%	0	1	0	0	2	2	0	2	0	0
3221	PCC Jointing Plan and Details/Transition Details	4	$50.91	$203.64	0.74%	0	0	0	0	2	0	0	2	0	0
3222	Edge Lighting/Apron Lighting Design/Electrical Design/Vault Improvements	0	$0.00	$0.00	0.00%	0	0	0	0	0	0	0	0	0	0
3223	Earthwork Distribution and Cross Sections	6	$45.74	$274.44	1.00%	0	0	0	0	2	2	0	2	0	0
3224	Restoration and Landscaping Plan	2	$50.91	$101.82	0.37%	0	0	0	0	1	0	0	1	0	0
3225	Misc Design Elements (e.g. Marking, Fencing, etc.)	2	$50.91	$101.82	0.37%	0	0	0	0	1	0	0	1	0	0
3300	Revisions to Technical Specifications based on Comment Resolution - Prepare IFB Specs	5	$56.33	$281.64	1.03%	0	1	0	0	2	0	0	2	0	0
3400	Revisions to Quantity Computations, Final Rev. of Opinion of Prob. Cost and Estimate of Contract	11	$53.37	$587.10	2.15%	0	1	0	0	5	0	0	5	0	0
3410	Quantity Computations	6	$52.32	$313.90	1.15%	0	0	0	0	2	0	0	4	0	0
3420	Cost Estimate Preparation and Development	3	$59.94	$179.82	0.66%	0	1	0	0	1	0	0	1	0	0
3430	Estimate of Time Preparation and Development	1	$46.69	$46.69	0.17%	0	0	0	0	1	0	0	0	0	0
3440	Prepare DBE Goals and Estimate	1	$46.69	$46.69	0.17%	0	0	0	0	1	0	0	0	0	0
4000	General Overall Project Related Tasks	47	$62.76	$2,949.86	10.78%	0	15	8	0	13	2	0	9	0	0
4100	Quality Control and Constructability Reviews	11	$71.43	$785.74	2.87%	0	1	8	0	1	0	0	1	0	0
4110	Prepare QC Plan	2	$62.35	$124.69	0.46%	0	1	0	0	1	0	0	0	0	0
4120	Complete QAP Reviews and Follow-up	4	$75.74	$302.96	1.11%	0	0	4	0	0	0	0	0	0	0
4130	Complete Constructability Reviews (at 80% and 100%)	5	$71.62	$358.09	1.31%	0	0	4	0	0	0	0	1	0	0
4200	Project Management and Meetings	28	$59.99	$1,679.79	6.14%	0	11	0	0	9	2	0	6	0	0
4210	Project Review and Coordination Meetings with the Owner, IDA and FAA (Est. (3) of Mtgs @ X 1 Hours/Ea.) *(Identify: Prelim. Design, Design Mtgs at 80% & 100%) - via conf. call if needed*	6	$62.35	$374.07	1.37%	0	3	0	0	3	0	0	0	0	0
4220	Project Coordination Meetings with Agencies including Permiting Authorities and Subconsultants ~~(Est. 2 of Mtgs @ 1 Hours/Ea.)~~	0	$0.00	$0.00	0.00%	0	0	0	0	0	0	0	0	0	0
4230	Internal Project Design Meetings and Coordination (Est. 2 of Mtgs @ 2 Hours/Ea.)	12	$59.94	$719.28	2.63%	0	4	0	0	4	0	0	4	0	0
4240	Project Management and Coord. of Design Team and Subconsultants	10	$58.64	$586.44	2.14%	0	4	0	0	2	2	0	2	0	0
4300	Post Design Phase - Pre-Bid and Bidding	2	$62.35	$124.69	0.46%	0	1	0	0	1	0	0	0	0	0
4310	Pre-bid meeting, Preparation & Attendance	0	$0.00	$0.00	0.00%	0	0	0	0	0	0	0	0	0	0
4320	Miscellaneous bidding Phase; addenda; respond to questions during bidding; analysis of bids; etc.	2	$62.35	$124.69	0.46%	0	1	0	0	1	0	0	0	0	0
4400	Project Design Closeout and Archive	6	$59.94	$359.64	1.31%	0	2	0	0	2	0	0	2	0	0
	Totals	542	$50.48	$27,361.46	100.00%	0	73	9	-	188	128	-	120	24	-

ATTACHMENT C

CONSTRUCTION PHASE SERVICES

ESTIMATE OF COSTS

Category	Amount ($)	
1. Direct Salary Costs	_____	(ATTACHMENT C-1)
2. Labor and General and Administrative Overhead[1]	_____	
3. Direct Nonsalary Expenses		
Lodging[2,3]	_____	
Meals/Per Diem[2,3]	_____	
Transportation[2]	_____	
Materials & Supplies	_____	
Printing	_____	
CADD time[4]	_____	
Other Costs (excluding outside services)	_____	
4. Fixed Payment[5]	_____	
5. Outside Services	_____	
Cost Plus Fixed Payment **Total Amount Not to Exceed**	$ _____	
OR		
Lump Sum **Total Amount Not to Exceed**	$ _____	

NOTES:

1/ A letter from IDOT with approval or provisional payroll burden / fringe and general / administrative expense rates must be attached (ATTACHMENT S) for verification of rates.

2/ Current approved rates established by State of Illinois - Governors Travel Control Board.

3/ Shall not be used in calculation of fixed payment amount.

4/ Maximum CADD rate shall be $15.00/hour.

5/ Fixed Payment (Profit) = (14.5%) x [Direct Salary Costs + (OH&B) x (Direct Salary Costs) + Transportation + Materials & Supplies + Printing + CADD time + Other Costs (excluding outside services)].

ATTACHMENT C-1

CONSTRUCTION PHASE SERVICES

ESTIMATE OF SALARY EXPENSES

Classification*	Hours	$Rate/Hour	Cost ($)
Principal			
Vice Principal			
Project Manager			
Senior Project Engineer			
Senior Project Architect			
Project Engineer			
Project Architect			
Senior Engineer			
Senior Architect			
Engineer			
Planner			
Registered Land Surveyor			
Land Surveyor			
Senior Engineering Technician			
Engineering Technician			
Engineering Assistant			
CADD/Draftsman/Technician			
Clerical			
Total	(hours)	(average)	$ (total direct salary costs) (ATTACHMENT D)

*Classifications may be adjusted as per Consultant's work force.

ATTACHMENT D

PLANNING AND SPECIAL SERVICES

DeKalb Taylor Municipal Airport

Remove & Replace a Portion of the Aircraft Parking Apron

Attachment D
Planning and Special Services
ESTIMATE OF COSTS

	CATEGORY			AMOUNT
1	Direct Salary Costs			$1,972.08
2	Labor and General and Administrative Overhead[1]	54.69%		$1,078.53
3	Direct Nonsalary Expenses	112.14%		$2,211.49
	Lodging[2,3]		$	-
	Meals/Per Diem[2,3]		$	-
	Transportation[2]		$	-
	Materials & Supplies		$	-
	Printing		$	-
	CADD time[4]		$	-
	Other Costs (Excluding outside Services)		$	-
4	Fixed Payment[5]			$760.00
5	Outside Services/Subconsultants			$0.00
	Cost Plus Fixed Payment **Total Amount Not to Exceed**			$6,022.10
	Or		**Use =**	$6,000.00

NOTES:

1/ A letter from IDOT with approval or provisional payroll burden / fringe and general / administrative expense rates must be attached (ATTACHMENT S) for verification of rates.
2/ Current approved rates established by State of Illinois - Governors Travel Control Board.
3/ Shall not be used in calculation of fixed payment amount.
4/ Maximum CADD rate shall be $15.00/hour.
5/ Fixed Payment (Profit) = (14.5%)x[Direct Salary Costs + (OH&B)x(Direct Salary Costs) + Transportation + Materials & Supplies + Printing + CADD time + Other Costs (excluding outside services)].

ATTACHMENT D-1

PLANNING AND SPECIAL SERVICES

ESTIMATE OF SALARY EXPENSES

CLASSIFICATION	TIME REQUIRED (HOURS)	HOURLY WAGE	SALARY EXPENSE
PRINCIPAL	0	$78.00	$0.00
PROJECT ENGINEER II	7	$78.00	$546.00
PROJECT ARCHITECT II	0	$66.69	$0.00
PROJECT MANAGER II	0	$75.74	$0.00
PROJECT ENVIRONMENTAL SCIENTIST II	0	$74.85	$0.00
PROJECT STRUCTURAL ENGINEER II	0	$78.00	$0.00
PROJECT ENGINEER I	0	$63.00	$0.00
PROJECT MANAGER I	0	$60.91	$0.00
PROJECT ENVIRONMENTAL SCIENTIST I	0	$64.78	$0.00
PROJECT STRUCTURAL ENGINEER I	0	$62.98	$0.00
SENIOR ENGINEER I	3	$46.69	$140.07
SENIOR ARCHITECT II	0	$55.21	$0.00
TECHNICAL MANAGER II	0	$53.60	$0.00
SENIOR PLANNER I	11	$44.97	$494.67
GIS SPECIALIST	0	$44.12	$0.00
ENVIRONMENTAL SCIENTIST III	0	$49.30	$0.00
SENIOR STRUCTURAL ENGINEER II	0	$61.73	$0.00
SENIOR STRUCTURAL ENGINEER I	0	$46.79	$0.00
ENGINEER I	2	$35.40	$70.80
SENIOR ARCHITECT I	0	$35.77	$0.00
ENVIRONMENTAL SCIENTIST II	1	$43.08	$43.08
STRUCTURAL ENGINEER I	0	$35.30	$0.00
PLANNER I	16	$35.45	$567.20
ENVIRONMENTAL SCIENTIST I	0	$29.55	$0.00
TECHNICAL MANAGER I	0	$31.58	$0.00
LAND SURVEYOR	0	$47.34	$0.00
SENIOR TECHNICIAN II	2	$55.13	$110.26
SENIOR TECHNICIAN I	0	$44.22	$0.00
TECHNICIAN II	0	$36.46	$0.00
TECHNICIAN I	0	$30.78	$0.00
PROJECT ADMINISTRATIVE ASSISTANT	0	$28.99	$0.00
ADMINISTRATIVE/ACCOUNTING ASSISTANT	0	$22.72	$0.00
		AVERAGE	
TOTAL	**42**	**$46.95**	**$1,972.08**

*Classifications may be adjusted as per Consultant's work force.

ATTACHMENT D-2

PLANNING AND SPECIAL SERVICES

DeKalb Taylor Municipal Airport

Remove & Replace a Portion of the Aircraft Parking Apron

Attachment D-2

Planning and Special Services Phase
Estimated Cost Breakdown Items 4, 5, 6 & 7

Item							
4	**MATERIALS AND SUPPLIES**						
	Surveying Supplies (paint, lathe, stakes, etc)			$ -			
	Drafting Media			$ -			
	Misc. Equipment and Direct Project Supplies			$ -			
			Sub-Total			**$**	**-**
5	**TRAVEL**						
	Travel Reimbursement	0	miles@ $ 0.560	$ -			
	Vehicle Days	0	days@ $ 65.00	$ -			
	Other Subsistence & Tolls			$ -			
			Sub-Total			**$**	**-**
6	**PRINTING**						
	Full Size Prints		sheets@ $ 2.40	$ -			
	Photo-copies		sheets@ $ 0.20	$ -			
			Sub-Total			**$**	**-**
7	**OTHER COSTS (EXCLUDING OUTSIDE SERVICES)**						
	Photos/Developing			$ -			
	Direct Project Shipping Expense			$ -			
	Unassigned Misc Project Direct Expense			$ -			
			Sub-Total			**$**	**-**
						$	**-**

ATTACHMENT D-3

PLANNING AND SPECIAL SERVICES

DeKalb Taylor Municipal Airport

Remove & Replace a Portion of the Aircraft Parking Apron

Attachment D-3 - Planning and Special Services Phase Engineering
Cost Estimate of Consultant Services (By Task)

	Element of Work	Hours	Ave Hourly Rate	Total Direct Labor	% of Total Labor	Principal	Project Engineer II	Project Manager II	Senior Engineer I	Senior Planner I	Engineer I	Environmental Scientist II	Planner I	Senior Technician II	Project Administrative Assistant
	Planning and Special Services Phase														
8049	**Section 163 Determination**	4	$48.47	$193.87	9.83%	0	1	0	0	1	0	0	2	0	0
8050	**NEPA Clearance**	28	$45.09	$1,262.44	64.02%	0	3	0	0	10	0	1	12	2	0
8051	Section 4f/6f, Endangered Species, Other Resources, Community Disruption, Environmental Justice, Surface Transportation, Noise, Air Quality, Water Quality, Hazardous Material, Light Emissions)	6	$46.99	$281.92	14.30%	0	1	0	0	2	0	1	2	0	0
8052	Exhibits for Environmental Clearance (Wetlands, Flood Maps,etc.)	6	$45.18	$271.10	13.75%	0	0	0	0	2	0	0	2	2	0
8053	Complete Environmental Documentation for Submittal	11	$42.78	$470.58	23.86%	0	1	0	0	4	0	0	6	0	0
8054	Project Description	0	$0.00	$0.00	0.00%	0	0	0	0	0	0	0	0	0	0
8055	ESR Request	4	$40.21	$160.84	8.16%	0	0	0	0	2	0	0	2	0	0
8056	Impact Category Checklist	0	$0.00	$0.00	0.00%	0	0	0	0	0	0	0	0	0	0
8057	Public Hearing (if requested)	0	$0.00	$0.00	0.00%	0	0	0	0	0	0	0	0	0	0
8058	Review and FAA/IDA Coordination	1	$78.00	$78.00	3.96%	0	1	0	0	0	0	0	0	0	0
8060	**Airspace Documents/Exhibits**	6	$44.40	$266.39	13.51%	0	1	0	1	0	2	0	2	0	0
8080	**ALP Update**	0	$0.00	$0.00	0.00%	0	0	0	0	0	0	0	0	0	0
8090	**Project Management**	4	$62.35	$249.38	12.65%	0	2	0	2	0	0	0	0	0	0
8091	Project Management	4	$62.35	$249.38	12.65%	0	2	0	2	0	0	0	0	0	0
8092	FAA Deliverable Review Coordination	0	$0.00	$0.00	0.00%	0	0	0	0	0	0	0	0	0	0
	Totals	42	$46.95	$1,972.08	100.00%	0	7	0	3	11	2	1	16	2	0

ATTACHMENT E

ENGINEERING REPORT (General Guidance)

The Engineering Report is to be prepared by the Consultant and submitted to the Sponsor and/or Department, if possible, prior to starting Plans and Specifications. The Report shall include, at a minimum, a discussion of the following elements which are applicable and any other elements deemed necessary by the Department:

1. Introduction, project overview and consistency with approved ALP, justification, scope, authorization, funding, required environmental actions and schedule.

2. Investigations and evaluations, including pavement history, PCI information, topographic survey data, soil sampling and testing, boring logs, CBR test results, subgrade stabilization considerations, and seasonal frost issues.

3. Pavement design considerations, including pavement types and/or alternates; any unusual design and reasons therefore, selection of design CBR value, traffic distribution, and reported pavement strength.

4. Rehabilitation, strengthening and/or overlay work shall be detailed as to the type of work required, including existing pavement conditions, material selection considerations, thickness design and economic analysis.

5. Construction features which vary from FAA criteria should be identified including the problem(s) facts, alternative solutions, and/ or desired solution. Is the desired solution the most economical?

6. Items such as materials sources, soils, drainage, water for construction, cost of land vs. development, contractor resources, available finances, and stage development. The report should say how these factors affected the decisions made by the Consultant in the design.

7. Explanation of drainage design criteria including explanation of drainage districts data INPUT and off-site drainage impact on design. Include drainage calculations and modeling.

8. Special considerations for local circumstances such as available material, equipment, contractors, and airport sponsored events.

9. Consultant's choice of options for the lighting design; similar explanation of choices made for the drainage, fencing, turfing and marking, including decisions regarding cover crop seeding.

10. Approach conditions which will result from proposed work and comparison with FAA criteria.

11. Analysis of potential RSA determination (if applicable).

12. Development of PCN for runway strengthening and rehabilitation projects.

13. Description of non-AIP work and quantity separation from AIP eligible items.

14. Identify work to be done by others such as utility companies and airports sponsor forces.

15. The Consultant's preliminary estimate of construction costs, fees and expenses shall be included.

16. A discussion of project safety concerns (per guidance explained in FAA AC 150/5370-2F (or current) Operational Safety on Airports during Construction) shall be included.

17. A discussion of project phasing / sequencing and estimate of construction calendar days shall be included.

ATTACHMENT F

Illinois Department of Transportation

Resident Engineer's Diary

Airport: _____ Date: _____

Contractor: _____ IL Project No.: _____ AIP Project _____

Temperature _____ Wind: _____ Weather Conditions: _____

Status: ☐ Active ☐ Suspended Jobsite Conditions: ☐ Workable ☐ Non-workable

Controlling Item: _____

Workforce

Consultant (# of people, hours): _____

Contractor (# of people, equipment, hours):

Daily Work

Pay items / General Location:

Instructions to Contractor / Unusual Events:

Verbal Approvals (official & item): _____

Additional Work (change order, etc.): _____

Official Visitors: _____

Materials Deliveries (material, quantity, quality) / Testing (test, location, corrective action):

Other:

Calendar Days: _____ Awarded
_____ Charged
_____ Remaining

DBE Onsite? (yes or no)
Own forces used? (yes or no)
Own equipment used? (yes or no)

Submitted _____ Firm: _____ Date: _____

ATTACHMENT G

COST PLUS FIXED PAYMENT INVOICE (Standard Format)

To: _____, Chief Engineer
Illinois Department of Transportation
Division of Aeronautics
Abraham Lincoln Capital Airport
1 Langhorne Bond Drive
Springfield, IL 62707-8415

From (Firm): _____
Address: _____
Telephone No.: _____
Invoice # _____ Date: _____
[ ] Partial [ ] Final

Attn: _____, Section Chief

Airport: _____ Municipality: _____, IL
Illinois Project No. _____ Federal Project No. _____
Notice to Proceed Date (OP&P Program Letter or Sponsor Authorization): _____
Per A/E Agreement/Amendment dated: _____

Services (Check only those services pertaining to invoice):

[ ] Preliminary Assessment and Schematic Design Phase
[ ] Design Phase
[ ] Construction Phase
[ ] Planning and Special Services
[ ] Other ( )
[ ] Amendment(s)

Service Dates: For Services Rendered From (date): _____ To (date): _____

Period	To Date	Billing
(1) Direct Salaries	$_____	$_____
Include all information per ATTACHMENT I (EFFORT DETAIL BREAKDOWN)		
(2) Labor and General and Administrative Overhead (_____%)	$_____	$_____
(3) Direct Non-Salary Expenses (OT Premium)	$_____	$_____
Support documentation must accompany all payment requests of direct non-salary expenses.		
(4) Profit – (Fixed Payment $_____ x ____% Complete)	$_____	$_____
(5) SUBTOTAL (1) – (4)	$_____	$_____
(6) Outside Services	$_____	$_____

TOTAL AMOUNT EARNED TO DATE: (5) + (6) ..... $_____
Maximum Payable (per Engineering Agreement) ..... $_____
Estimated total cost to complete project (for billings after 50%) ..... $_____
Less Total Amount(s) Previously Invoiced ..... $_____
PAYMENT DUE THIS INVOICE ..... $_____

I certify that to the best of my knowledge, the percent of work shown as complete on this Invoice is correct.

By: _____ _____
Printed Name and Title

Department Approval
By: _____ _____
Printed Name and Title

NOTE: This format is for general information. The Consultant's format containing essential data may be acceptable.

ATTACHMENT H

LUMP SUM INVOICE (Standard Format)

To: _____, Chief Engineer
Illinois Department of Transportation
Division of Aeronautics
Abraham Lincoln Capital Airport
1 Langhorne Bond Drive
Springfield, IL 62707-8415

From (Firm): _____
Address: _____
Telephone No.: _____
Invoice # _____ Date: _____
[ ] Partial [ ] Final

Attn: _____, Section Chief

Airport: _____ Municipality: _____, IL
Illinois Project No. _____ Federal Project No. _____
Notice to Proceed Date (OP&P Program Letter or Sponsor Authorization): _____
Per A/E Agreement/Amendment dated: _____

Services (Check only those services pertaining to invoice):

[ ] Preliminary Assessment and Schematic Design Phase
[ ] Design Phase
[ ] Construction Phase
[ ] Planning and Special Services
[ ] Other ( )
[ ] Amendment(s)

Service Dates:
For Services Rendered From (date): _____ To (date): _____

(1) Lump Sum (LS) Fee (or Maximum Payable per Engineering Agreement)..$_____

(2) Percent of Work Complete: _____%

(3) Fee Earned to Date: (LS $_____ x _____% Complete)....$_____

(4) Less Total Amount(s) Previously Invoiced.....$_____

(5) PAYMENT DUE THIS INVOICE.....$_____

I certify that to the best of my knowledge, the percent of work shown as complete on this Invoice is correct.

By: _____ _____
Printed Name and Title

Department Approval

By: _____ _____
Printed Name and Title

NOTE: This format is for general information. The Consultant's format containing essential data may be acceptable.

ATTACHMENT I

EFFORT DETAIL BREAKDOWN (Standard Format)

Page ____ of ____ Pages

Airport: _____
Illinois Project No. _____
Federal Project No. _____

Invoice No. _____
Date: _____

ENGINEERING COSTS BREAKDOWN

Agreement Paragraph Governing Services	Service Performed	Date Performed	Employee's Name and Classification	Hours	Rate	Amount

Total _____

ENGINEERING FIRM

Name _____

Address _____

_____

_____

Prepared By _____

Date _____

NOTE:
This format is for general information; however the consultant's format containing the essential data may be acceptable.

ATTACHMENT J

TESTING SCHEDULE – *See Testing Proposal*

Testing Schedule - anticipated for the Preliminary Assessment and Schematic Design, Design and Construction phases of the project. See subconsultant work scope

Description	Approximate Number
ASTM D 421, Particle Size Analysis	
ASTM D 2217	
ASTM C 422	
ASTM D 698, Moisture-Density Relations of Soil	
ASTM D 1557	
ASTM D 427, Shrinkage Factors of Soil	
ASTM D 2434, Permeability of Granular Soils	
AASHTO T 194, Determination of Organic Materials in Soils by Wet Combustion	
ASTM D 1883, Bearing Ratio of Laboratory Compacted Soil	
AASHTO T 222, Modulus of Soil Reaction	
ASTM D 2487, Soil Classification "Unified System"	
ASTM D 2113, Soil Borings	
ASTM C 207, Hydrated Lime	
ASTM C 131, Abrasion	
ASTM C 88, Soundness	
ASTM D 946, Penetration	
ASTM D 3381, Viscosity	
ASTM D 1559, Marshall Method	
ASTM C 136, Gradation	
ASTM D 2172, Extraction and Gradation	
ASTM D 2726, Bulk Specific Gravity	
ASTM D 2041, Maximum Theoretical Specific Gravity	
ASTM D 2950, Nuclear Density	
ASTM C 117 Washed Aggregate Sample	
ASTM D 4318, Liquid Limit, Plastic Limit, Plasticity Index	
ASTM C 127, Absorption and Specific Gravity	
ASTM C 128	
ASTM C 566, Moisture Content	
ASTM C 31, PCC Test Cylinders	
ASTM C 141, Slump	
ASTM C 231, Air Content	
ASTM C 78, Flexural Strength	
ASTM C 138, Yield, Cement Content	
ASTM D 412, Rubber in Tension	
ASTM D 1664, Striping Test	

The testing form shall be adjusted to the specific project. The consultant shall not assume IDOT will provide any testing and inspections. Payment for these services shall be at the rates established in ATTACHMENT K. - TESTING RATES & COST SUMMARY.

ATTACHMENT K

TESTING RATES & COST SUMMARY – *See Testing Proposal*

DESCRIPTION OF TEST	ESTIMATED COST PER TEST	NUMBER REQUIRED	TOTAL $

DocuSign Envelope ID: EA7B2723-97F3-452F-8F23-55F14F3181FC

TSC
TESTING SERVICE CORPORATION

Corporate Office

360 South Main Place, Carol Stream, IL 60188-2404
630.462.2600 • Fax 630.653.2988

DeKalb Office

650 North Peace Road, DeKalb, IL 60115-8401
815.748.2100 • Fax 815.748.2110

January 23, 2023

Mr. Doug Klonowski, P.E.
Crawford, Murphy & Tilly, Inc.
550 North Commons Drive, Suite 116
Aurora, Illinois 60504

RE: P.N. 70,205
Geotechnical Exploration
Remove and Replace Portion of Airport Parking Apron
DeKalb Taylor Municipal Airport
3232 Pleasant Street
DeKalb, Illinois

Dear Mr. Klonowski:

Testing Service Corporation (TSC) is pleased to submit this proposal to provide Geotechnical Engineering Services for the above captioned project. It is in response to a Request For Proposal (RFP), dated December 28, 2022, from Crawford, Murphy & Tilly, Inc. (CMT) to TSC. The objectives of the Geotechnical Study are to explore soil and groundwater conditions and provide recommendations and information for use in connection with the proposed Parking Apron Removal and Replacement project.

According to the above referenced RFP, the proposed project is located at the DeKalb Taylor Municipal Airport (DTMA), will consist of removing a portion of the bituminous terminal apron and replacing it with Portland Cement Concrete (PCC) pavement. The new pavement(s) are expected to consist of 10 inches in thickness of PCC overlying 6 inches of granular base course material if necessary. Undercuts of the subgrade soils and placement with porous granular embankment material may be anticipated depending upon the soil conditions encountered at the site.

Boring/Coring Program:

The following is a general summary of the proposed boring and pavement coring program, as generally noted in your RFP, for this project:

- As required/requested, a total of four (4) combination soil borings and pavement cores will be performed upon the existing apron at the locations indicated on the attached site plan prepared/provided by CMT. As requested, the borings will be drilled to a nominal maximum depth of 10 feet, each, below existing grade.
- Two (2) soil borings extending 10 feet deep will be performed off of the existing apron.

Based on this scope the total drilling footage will be a maximum of 60 lineal feet.

For the purposes of this proposal we have assumed that the boring/core locations will be accessible to conventional truck or ATV mounted drill. In this regard, they should not be located in standing water, within wooded areas or on steeply sloping ground. No provisions have been made for tree/brush clearing snow removal or other obstruction removal should borehole access be impeded. Landscape restoration (if required) is also not included in the project budget. It is assumed that the borings and cores can be made during standard/normal weekday business hours.

DocuSign Envelope ID: EA7B2723-97F3-452F-8F23-55F14F3181FC

It is understood that the borings will be staked/located by others. Utility clearance for the borings will be obtained by contacting JULIE (Joint Utility Locating Information for Excavators), as well as the appropriate personnel with the DeKalb Taylor Municipal Airport and the Federal Aviation Adminstration. Private underground utility lines will have to be marked by the property owner or their agents; a private locator can be hired for an added cost if necessary.

Soil samples will primarily be obtained by split-spoon methods, with thin-walled tubes also taken if conditions dictate. Sampling will be performed at 2½-foot intervals from the bottom of the pavement materials to the planed termination depth of 10 feet. A representative portion of the split-spoon samples will be placed in a glass jar with screw-type lid for transportation to our laboratory, along with select dual samples for analytical testing (if required). Groundwater observations will also be made during and following completion of drilling operations, with the boreholes to be backfilled immediately and pavement areas also patched at the surface.

The pavement cores will be performed using an electric core drill fitted with a 4-inch and/or 6-inch diameter core barrel and will extend to the top of the subgrade where the coring will be terminated. The granular base course material, found directly below the surficial hot-mix asphalt and/or concrete pavement materials, will be measured for thickness using a drill rig. The drill rig will be used to power auger through the granular base course material in order to determine the base thickness at each test location and to obtain samples of the aggregate base material(s). The pavement cores will be logged in the field for type of material and measured for thickness. The pavement core samples will be transported to our laboratory for further examination and testing. The core holes will be backfilled immediately upon completion and the pavement areas also patched at the surface.

Laboratory Testing:

Samples obtained from the borings will be examined by experienced laboratory personnel in order to verify field descriptions as well as to visually classify in accordance with the Unified Soil Classification System. Laboratory testing will include moisture content and dry unit weight determinations as well as measurements of unconfined compressive strength by direct or indirect methods, as appropriate. Representative subgrade samples will also be tested for Atterberg Limits and grain size analyses in accordance with the appropriate ASTM procedures. California Bearing Ratio (CBR) and Modified Proctor test(s) will also be performed per Illinois Department of Transportation (IDOT) and ASTM D 1557 procedures, on a representative sample or samples obtained from the subgrade from the borings. Wet-Combustion organic content and pH tests on topsoil will also be performed. Other tests deemed to be necessary by TSC's Project Engineer may also be recommended for your approval.

Engineering Report:

Upon completion of sampling and testing, you will receive a geotechnical engineering report summarizing field and laboratory test date, including computer generated boring logs and location plan. The report will provide a summary of soil and groundwater conditions as well as address their impact on the proposed site development. It will also provide recommendations to guide design and specification preparation pertaining to geotechnical issues relevant to the structure(s) or purpose described in this

DocuSign Envelope ID: EA7B2723-97F3-452F-8F23-55F14F5181FC

proposal. Information regarding the existing pavement structure(s) encountered at the test locations will also be included in our report.

Fees and Scope:

In accordance with the first Cost Estimate attached, TSC is proposing a not-to-exceed budget amount of Seven Thousand Seven Hundred Dollars ($7,700.00) to provide the Geotechnical Exploration outlined above. This is based on the understanding that the boring locations are accessible to a conventional drilling equipment and the work can be performed during standard business hours. Our fees are further subject to this proposal being accepted by you on or before March 31, 2023.

Should the study reveal unexpected subsurface conditions requiring a change in the scope of work, you will be contacted before we proceed with any additional work. Our invoice would then be based on our standard unit rates given in the attached Cost Estimates or as otherwise agreed upon. While our quoted fee does not include earthwork, excavation, and/or footing observations during the construction phase, the project budget should include a provision for these services. Plan review, preconstruction meetings and/or other consulting and professional services that are provided subsequent to the delivery of TSC's report would be covered by separate invoice.

Closure:

The geotechnical engineering and environmental services being performed are subject to TSC's attached General Conditions. TSC charges include all state and federal taxes that may be required. However, unless stated otherwise they do not include license, permit or bond fees that local governments may impose, if any to potentially be added to our invoice. The invoice(s) will be sent to the following unless written instructions to the contrary, are received:

Crawford, Murphy & Tilly, Inc.
Attn: Accounts Payable
2750 West Washington Street
Springfield, Illinois 62702-3497
Phone: 217.787.8050
Email: ap@cmtengr.com

DS JM DS DJK

If this proposal meets with your approval, please indicate your acceptance by signing one copy and returning it to our DeKalb, Illinois office. It would be helpful if you could also complete the attached Project Data form indicating who is to receive copies of TSC's report and other related information.

Your consideration of our proposal is appreciated. We look forward to being of service to you on this project.

DocuSign Envelope ID: EA7B2723-97F3-452F-8F23-55F14F3181FC

Respectfully submitted,

TESTING SERVICE CORPORATION

Steven R. Koester, P.E.
Vice President

Enc: Cost Estimates
General Conditions
Project Data Sheet

Approved and accepted for CMT by:

DocuSigned by:
Douglas J Klonowski
EE2FD47BED8D4DB...

- Doug Klonowski
(NAME)

Vice President/ Aurora Office Manager
(TITLE)

February 13, 2023
(DATE)

DocuSign Envelope ID: EA7B2723-97F3-452F-8F23-55F14F3181FC

COST ESTIMATE
Geotechnical Exploration
Remove and Replace Portion of Airport Parking Apron
DeKalb Taylor Municipal Airport
3232 Pleasant Street
DeKalb, Illinois

	ITEM	UNITS	QTY	RATE	COST
STAKING AND UTILITY CLEARANCE					
1.1	Layout Person to Mark Boring Locations, Obtain Surface Elevations and/or Arrange for Clearance of Underground Utilities	Hour	3.0	110.00	$ 330.00
1.2	Utility Locator to Mark Private Underground Lines incl. Inside Existing Buildings	Cost + 10%	0	Est. 850.00	$ 0.00
DRILLING AND SAMPLING					
2.1	Drill Mounted on Truck or ATV with Two-Person Crew (Portal-to-Portal)	Lump Sum	1	3,475.00	$ 3,475.00
LABORATORY TESTING					
3.1	Examine Samples to Describe by Textural System and Classify Using the Unified Soil Classification System	Each	26	4.00	$ 104.00
3.2	Water Content Determination (Includes Pocket Penetrometer Reading on Cohesive Samples)	Each	23	8.00	$ 184.00
3.3	Unconfined Compressive Strength of Cohesive Soils or Torvane Shear Strength Measurement	Each	6	16.00	$ 96.00
3.4	Dry Unit Weight Determination	Each	3	8.00	$ 24.00
3.5	Atterberg Limits Determination	Each	2	120.00	$ 240.00
3.6	Sieve Analysis with Hydrometer	Each	2	150.00	$ 300.00
3.7	Modified Proctor Test	Each	2	210.00	$ 420.00
3.8	California Bearing Ratio Test	Each	2	650.00	$ 1,300.00
3.9	Organic Content (L.O.I. and Wet Combustion)	Each	2	100.00	$ 200.00
3.10	pH Test	Each	2	10.00	$ 20.00

DocuSign Envelope ID: EA7B2723-97F3-452F-8F23-55F14F3181FC

	ITEM	UNITS	QTY	RATE	COST
ENGINEERING SERVICES					
4.1	Prepare Geotechnical Report with Typed Boring Logs and Location Plan	Lump Sum	1	1,000.00	$ 1,000.00
4.2	Senior Geotechnical Engineer to Consult or Attend Project Meetings	Hour	0.0	200.00	$ 0.00
				ESTIMATED TOTAL:	$ 7,693.00
				RECOMMENDED BUDGET:	**$ 7,700.00**

DocuSign Envelope ID: EA7B2723-97F3-452F-8F23-55F14F3181FC

GENERAL CONDITIONS

Geotechnical and Construction Services

TESTING SERVICE CORPORATION

1. PARTIES AND SCOPE OF WORK: If Client is ordering the services on behalf of another, Client represents and warrants that Client is the duly authorized agent of said party for the purpose of ordering and directing said services, and in such case the term "Client" shall also include the principal for whom the services are being performed. Prices quoted and charged by TSC for its services are predicated on the conditions and the allocations of risks and obligations expressed in these General Conditions. Unless otherwise stated in writing, Client assumes sole responsibility for determining whether the quantity and the nature of the services ordered by Client are adequate and sufficient for Client's intended purpose. Unless otherwise expressly assumed in writing, TSC's services are provided exclusively for client. TSC shall have no duty or obligation other than those duties and obligations expressly set forth in this Agreement. TSC shall have no duty to any third party. Client shall communicate these General Conditions to each and every party to whom the Client transmits any report prepared by TSC. Ordering services from TSC shall constitute acceptance of TSC's proposal and these General Conditions.

2. SCHEDULING OF SERVICES: The services set forth in this Agreement will be accomplished in a timely and workmanlike manner. If TSC is required to delay any part of its services to accommodate the requests or requirements of Client, regulatory agencies, or third parties, or due to any cause beyond its reasonable control, Client agrees to pay such additional charges, if any, as may be applicable.

3. ACCESS TO SITE: TSC shall take reasonable measures and precautions to minimize damage to the site and any improvements located thereon as a result of its services or the use of its equipment; however, TSC has not included in its fee the cost of restoration of damage which may occur. If Client desires or requires TSC to restore the site to its former condition, TSC will, upon written request, perform such additional work as is necessary to do so and Client agrees to pay to TSC the cost thereof plus TSC's normal markup for overhead and profit.

4. CLIENT'S DUTY TO NOTIFY ENGINEER: Client represents and warrants that Client has advised TSC of any known or suspected hazardous materials, utility lines and underground structures at any site at which TSC is to perform services under this Agreement. Unless otherwise agreed in writing, TSC's responsibility with respect to underground utility locations is to contact the Illinois Joint Utility Locating Information for Excavators for the location of public, but not private, utilities.

5. DISCOVERY OF POLLUTANTS: TSC's services shall not include investigation for hazardous materials as defined by the Resource Conservation Recovery Act, 42 U.S.C.§ 6901, et, seq., as amended ("RCRA") or by any state or Federal statute or regulation. In the event that hazardous materials are discovered and identified by TSC, TSC's sole duty shall be to notify Client.

6. MONITORING: If this Agreement includes testing construction materials or observing any aspect of construction of improvements, Client's construction personnel will verify that the pad is properly located and sized to meet Client's projected building loads. Client shall cause all tests and inspections of the site, materials and work to be timely and properly performed in accordance with the plans, specifications, contract documents, and TSC's recommendations. No claims for loss, damage or injury shall be brought against TSC unless all tests and inspections have been so performed and unless TSC's recommendations have been followed.

TSC's services shall not include determining or implementing the means, methods, techniques or procedures of work done by the contractor(s) being monitored or whose work is being tested. TSC's services shall not include the authority to accept or reject work or to in any manner supervise the work of any contractor. TSC's services or failure to perform same shall not in any way operate or excuse any contractor from the performance of its work in accordance with its contract. "Contractor" as used herein shall include subcontractors, suppliers, architects, engineers and construction managers.

Information obtained from borings, observations and analyses of sample materials shall be reported in formats considered appropriate by TSC unless directed otherwise by Client. Such information is considered evidence, but any inference or conclusion based thereon is, necessarily, an opinion also based on engineering judgment and shall not be construed as a representation of fact. Subsurface conditions may not be uniform throughout an entire site and ground water levels may fluctuate due to climatic and other variations. Construction materials may vary from the samples taken. Unless otherwise agreed in writing, the procedures employed by TSC are not designed to detect intentional concealment or misrepresentation of facts by others.

7. DOCUMENTS AND SAMPLES: Client is granted an exclusive license to use findings and reports prepared and issued by TSC and any sub-consultants pursuant to this Agreement for the purpose set forth in TSC's proposal provided that TSC has received payment in full for its services. TSC and, if applicable, its sub-consultant, retain all copyright and ownership interests in the reports, boring logs, maps, field data, field notes, laboratory test data and similar documents, and the ownership and freedom to use all data generated by it for any purpose. Unless otherwise agreed in writing, test specimens or samples will be disposed immediately upon completion of the test. All drilling samples or specimens will be disposed sixty (60) days after submission of TSC's report.

8. TERMINATION: TSC's obligation to provide services may be terminated by either party upon (7) seven days prior written notice. In the event of termination of TSC's services, TSC shall be compensated by Client for all services performed up to and including the termination date, including reimbursable expenses. The terms and conditions of these General Conditions shall survive the termination of TSC's obligation to provide services.

9. PAYMENT: Client shall be invoiced periodically for services performed. Client agrees to pay each invoice within ~~thirty (30) days of its receipt. Client further agrees to pay interest on all amounts invoiced and not paid or objected to in writing for valid cause within sixty (60) days at the rate of twelve (12%) per annum (or the maximum interest rate permitted by applicable law, whichever is the lesser) until paid and TSC's costs of collection of such accounts, including court costs and reasonable attorney's fees.~~ fifteen (15) days upon payment from Owner.

10. WARRANTY: TSC's professional services will be performed, its findings obtained and its reports prepared in accordance with these General Conditions and with generally accepted principles and practices. In performing its professional services, TSC will use that degree of care and skill ordinarily exercised under similar circumstances by members of its profession. In performing physical work in pursuit of its professional services, TSC will use that degree of care and skill ordinarily used under similar circumstances. This warranty is in lieu of all other warranties or representations, either express or implied. Statements made in TSC reports are opinions based upon engineering judgment and are not to be construed as representations of fact.

~~Should TSC or any of its employees be found to have been negligent in performing professional services or to have made and breached any express or implied warranty, representation or contract, Client, all parties claiming through Client and all parties claiming to have in any way relied upon TSC's services or work agree that the maximum aggregate amount of damages for which TSC, its officers, employees and agents shall be liable is limited to $50,000 or the total amount of the fee paid to TSC for its services performed with respect to the project, whichever amount is greater.~~

~~In the event Client is unwilling or unable to limit the damages for which TSC may be liable in accordance with the provisions set forth in the preceding paragraph, upon written request of Client received within five days of Client's acceptance of TSC's proposal together with payment of an additional fee in the amount of 5% of TSC's estimated cost for its services (to be adjusted to 5% of the amount actually billed by TSC for its services on the project at time of completion), the limit on damages shall be increased to $500,000 or the amount of TSC's fee, whichever is the greater. This charge is not to be construed as being a charge for insurance of any type, but is increased consideration for the exposure to an award of greater damages.~~

11. INDEMNITY: Subject to the provisions set forth herein, TSC and Client hereby agree to indemnify and hold harmless each other and their respective shareholders, directors, officers, partners, employees, agents, subsidiaries and division (and each of their heirs, successors, and assigns) from any and all claims, demands, liabilities, suits, causes of action, judgments, costs and expenses, including reasonable attorneys' fees, arising, or allegedly arising, from personal injury, including death, property damage, including loss of use thereof, due in any manner to the negligence of either of them or their agents or employees or independent contractors. In the event both TSC and Client are found to be negligent or at fault, then any liability shall be apportioned between them pursuant to their pro rata share of negligence or fault. TSC and Client further agree that their liability to any third party shall, to the extent permitted by law, be several and not joint. ~~The liability of TSC under this provision shall not exceed the policy limits of insurance carried by TSC.~~ Neither TSC nor Client shall be bound under this indemnity agreement to liability determined in a proceeding in which it did not participate represented by its own independent counsel. The indemnities provided hereunder shall not terminate upon the termination or expiration of this Agreement, but may be modified to the extent of any waiver of subrogation agreed to by TSC and paid for by Client.

12. SUBPOENAS: TSC's employees shall not be retained as expert witnesses except by separate, written agreement. Client agrees to pay TSC pursuant to TSC's then current fee schedule for any TSC employee(s) subpoenaed by any party as an occurrence witness as a result of TSC's services.

13. OTHER AGREEMENTS: TSC shall not be bound by any provision or agreement (i) requiring or providing for arbitration of disputes or controversies arising out of this Agreement or its performance, (ii) wherein TSC waives any rights to a mechanics lien or surety bond claim; (iii) that conditions TSC's right to receive payment for its services upon payment to Client by any third party or (iv) that requires TSC to indemnify any party beyond its own negligence These General Conditions are notice, where required, that TSC shall file a lien whenever necessary to collect past due amounts. This Agreement contains the entire understanding between the parties. Unless expressly accepted by TSC in writing prior to delivery of TSC's services, Client shall not add any conditions or impose conditions which are in conflict with those contained herein, and no such additional or conflicting terms shall be binding upon TSC. The unenforceability or invalidity of any provision or provisions shall not render any other provision or provisions unenforceable or invalid. This Agreement shall be construed and enforced in accordance with the laws of the State of Illinois. In the event of a dispute arising out of or relating to the performance of this Agreement, the breach thereof or TSC's services, the parties agree to try in good faith to settle the dispute by mediation under the Construction Industry Mediation Rules of the American Arbitration Association as a condition precedent to filing any demand for arbitration, or any petition or complaint with any court. Paragraph headings are for convenience only and shall not be construed as limiting the meaning of the provisions contained in these General Conditions.

DS

ATTACHMENT L (Optional)

SUMMARY OF PAYROLL BURDEN AND FIXED COSTS

	% of Direct Productive Payroll
Federal Insurance Contributions Act	_____
State Unemployment Compensation	_____
Federal Unemployment Compensation	_____
Workmen's Compensation Insurance	_____
Paid Holidays, Vacation, Sick Leave	_____
Bonus	_____
Pension	_____
Group Insurance	_____
TOTAL PAYROLL BURDEN & FRINGE COSTS	_____ %

NOTE:
A letter from IDOT with approval or provisional payroll burden / fringe and general / administrative expense rates must be attached (ATTACHMENT S) for verification of rates.

ATTACHMENT M (Required)

SUMMARY OF OVERHEAD AND INDIRECT COSTS

CRAWFORD, MURPHY & TILLY, INC.
SUMMARY OF INDIRECT OVERHEAD COST
AUDITED CALENDAR YEAR 2020
AND PROVISIONAL 2020/2021

CMT ACCOUNT NUMBER	ACCOUNT NAME	% OF DIRECT LABOR COSTS	
	PAYROLL BURDEN AND FRINGE BENEFITS		
6151	FICA Tax	12.10%	
6102, 6103, 6170	Paid Time Off (Vacation, Holidays and Sick Leave)	16.34%	
6154, 6156, 6158	Group Medical, Life, Workers Comp, Disability and Unemployment Insurance	8.64%	
6159, 6160	Employee Retirement Plan Contributions	17.61%	54.69%
	GENERAL & ADMINISTRATIVE OVERHEAD EXPENSE		
6104-6119	Indirect Salaries - Not Allocable to Projects	66.71%	
6222, 6264	Miscellaneous Taxes	1.10%	
6231	Professional Fees	4.48%	
6251	Rent	10.31%	
6252	Utilities	0.71%	
6271	Telephone & Data	2.37%	
6253-6254	Maintenance, Repairs & Supplies	1.62%	
6261-6265	Office Supplies, Shipping & Reproduction	0.69%	
6281, 6284	Seminars, Registration & Education	1.79%	
6291,92,95,6321-23	Travel & Vehicle Expense	1.37%	
6331, 6332	Business Insurance	2.75%	
6351,52,61,62,69	Equipment Expense, Repairs & Maintenance	1.51%	
6366, 6367, 6368	Computer Expense & Supplies	12.27%	
6371,6372,6381,6382	Maps, Reference Books, Engineering & Survey Supplies	0.28%	
6401+COFC	Depreciation & Cost of Facilities Capital (0.23%)	4.18%	112.14%
	TOTAL OVERHEAD		166.83%

NOTE: A letter from IDOT with approval or provisional payroll burden / fringe and general / administrative expense rates must be attached (ATTACHMENT S) for verification of rates.

ATTACHMENT N

PROJECT CERTIFICATION

Airport: _____

Letting Date: _____
IL Project No.: _____
Federal Project No.: _____
Contract No: _____

Project Description: _____

_____

Pursuant to Federal Aviation Regulations, Part 152, as amended, and as a condition to receiving any Federal and/or State financial assistance through a Grant Offer from the FAA and/or the State of Illinois - Department of Transportation for the proposed airport development project, it is hereby represented, to the best of our knowledge, information, and belief that:

1. The Consultant has been selected to provide the necessary professional services for the project described herein and identified in the Professional Services Request For Qualifications (RFQ).
   Selection Date (Required):_____ Copy of Retainer attached (ATTACHMENT U).
2. Project is clearly delineated on the currently approved Airport Layout Plan.
   Approval Date (Required):_____.
3. Project is environmentally cleared. [ ] CatEx [ ] EA [ ] EIS [ ] FONSI
   Approval Date (Required):_____.
4. All Corps/EPA permits and other regulatory agency reviews/approvals/mitigation have been satisfied and there are no known encumbrances to the completion of the project.
   [ ] Yes [ ] No.
5. Plans were prepared in accordance with FAA approved standards and advisory circulars; and, the specifications were prepared in accordance with the FAA approved *Illinois Standard Specifications For Construction Of Airports*, along with the Division of Aeronautics' most current Policy Memorandums and "Handout" Specifications, except as noted by attached Modification of Standards (MOS) which has been addressed and justified in the engineering report and submitted to and approved by the FAA and Engineer of Design. [ ] Yes [ ] No.
   Approval Date of MOS (If applicable):_____.
6. The design conforms to the approved project scope. [ ] Yes [ ] No.
7. Provisions have been included for safety during construction (per guidance explained in FAA AC 150/5370-2F (or current) Operational Safety on Airports during Construction). [ ] Yes [ ] No.
8. The plans, special provisions and quantities have been thoroughly checked in accordance with best management practices by the Consultant for accuracy and consistency, and are in conformance with AC 150/5300-13 (latest edition). All contract deliverables referenced in Section I.F. DELIVERABLES have been submitted, received and determined acceptable.
   [ ] Yes [ ] No.

Date _____ By: _____
Design Engineer (Consultant)

Date _____ By: _____
Sponsor

Date _____ By: _____ P.E.
Department Design Engineer

Date _____ By: _____ P.E.
Engineer of Design

ATTACHMENT O

DBE FINAL DOCUMENTATION

Illinois Department of Transportation

Prime Consultant

Name _____
Address _____
_____
Telephone _____

DBE Subconsultant

Name _____
Address _____
_____
Telephone _____

Subject

Airport _____
Illinois Project No. _____
Federal Project No _____

Contract Amounts

Consultant Contract Amount _____
DBE Contract Amount _____
DBE Participation (%) _____

This documentation verifies the services provided and the amount paid to the DBE Subconsultant on the above captioned contract. The undersigned certifies that the services reported herein were executed by the DBE, that the DBE actually provided the services and that the services reported herein conform to the services reported in the approved Professional Services Agreement together with any amendments approved by the Sponsor and/or Division as applicable.

Description of Service Provided	Contract Amount	Amount Paid	Difference (+/-)
1.			
2.			
3.			
4.			
5.			
6.			
Totals			

DBE Contract amount has been met or exceeded [ ] Yes [ ] No *(check one).*

DBE Contract amount not met – Shortfall $_____ *(documentation explaining shortfall attached).*

Prime Consultant

_____
Print Name

_____
Title

_____
Signature

_____
Date

DBE Subconsultant

_____
Print Name

_____
Title

_____
Signature

_____
Date

ATTACHMENT P

PROJECT SKETCH

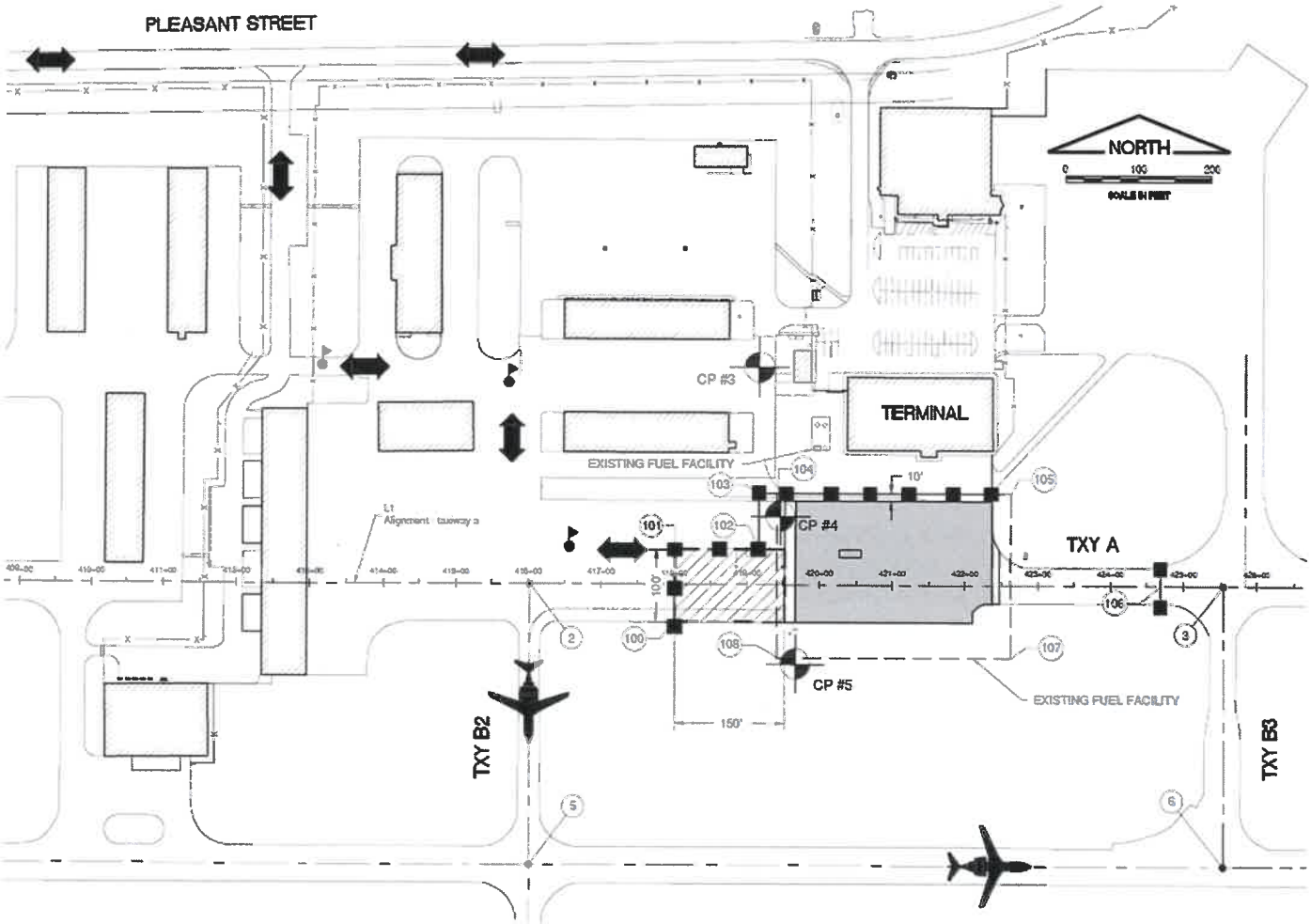

ATTACHMENT Q

PROJECT LETTING SCHEDULE

PRELIMINARY PROJECT SCHEDULE

The proposed anticipated project schedule is as follows. An updated project schedule will be established at the pre-design conference and included within the Engineering Report. The schedule is contingent upon reasonable response and reviews being provided the consultant prior to each subsequent delivery date.

Schedule Item	Anticipated Duration	Due Date
Pre-Design Meeting	-	February 2, 2022
Engineering Report (35%)	5 Weeks	August 12, 2022
Agency/Owner Review of Des. Rpt 35% Comments	2 Weeks	August 26, 2022
Develop Preliminary Plans & Specifications (80%)	8 Weeks	February 3, 2023
Agency/Owner Review of 80% Plans Comments	2 Weeks	February 17, 2023
Develop Final Plans & Specifications (100%)	2 Weeks	March 3, 2023
Service Bulletin	3 Weeks	March 24, 2023
IDOT Letting	-	April 28, 2023
Award Date	-	July 28, 2023

It is agreed that delays in the consultant receiving agency comments and approvals beyond the review period presented will result in a revised, mutually agreeable schedule for subsequent submittals.

ILLINOIS DEPARTMENT OF TRANSPORTATION
DIVISION OF AERONAUTICS
2023 LETTING SCHEDULE WITH ASSOCIATED REGRESSIVE DATES

22 Week Project Development Timeline (154 Calendar Days)				IDOT Letting Date	Anticipated Award Date	Anticipated Start to Work Date
START (0%)	35%	80%	100%			
Pre-design Meeting Target Date	Engineering Report to IDA for Comments	*Sealable Plans and Specifications to IDA for Comments	Approved and Sealed Final Plans and Specifications to IDA			
19-Nov-2021	14-Jan-2022	25-Mar-2022	22-Apr-2022	17-Jun-2022	16-Sep-2022	14-Oct-2022
07-Jan-2022	04-Mar-2022	13-May-2022	10-Jun-2022	05-Aug-2022	04-Nov-2022	01-May-2023
25-Feb-2022	22-Apr-2022	01-Jul-2022	29-Jul-2022	23-Sep-2022	23-Dec-2022	01-May-2023
22-Apr-2022	17-Jun-2022	26-Aug-2022	23-Sep-2022	18-Nov-2022	17-Feb-2023	01-May-2023
17-Jun-2022	12-Aug-2022	21-Oct-2022	18-Nov-2022	20-Jan-2023	21-Apr-2023	19-May-2023
12-Aug-2022	07-Oct-2022	16-Dec-2022	13-Jan-2023	10-Mar-2023	09-Jun-2023	07-Jul-2023
30-Sep-2022	25-Nov-2022	03-Feb-2023	03-Mar-2023	28-Apr-2023	28-Jul-2023	25-Aug-2023
18-Nov-2022	13-Jan-2023	24-Mar-2023	21-Apr-2023	16-Jun-2023	15-Sep-2023	13-Oct-2023
06-Jan-2023	03-Mar-2023	12-May-2023	09-Jun-2023	04-Aug-2023	03-Nov-2023	01-May-2024
24-Feb-2023	21-Apr-2023	30-Jun-2023	28-Jul-2023	22-Sep-2023	22-Dec-2023	01-May-2024

**Requirements of the 80% milestone submittal shall include a complete set of Contract Documents, as outlined in the A/E agreement, designed and reviewed for adherence to Federal Aviation Administration (FAA) and Illinois Division of Aeronautics (IDA) concepts and standards by a licensed Illinois Professional Engineer. Submittals shall include but not limited to the following documents: Construction Plans, Special Provisions and Construction Safety Phasing Plan with a detailed Estimate of Costs, Contract Time, and DBE Participation Goal along with any applicable Modifications of Standards and Certification requirements required by the FAA Review Matrix Guide per memorandum dated 08/02/2016.*

ATTACHMENT R

OP&P PROGRAM LETTER

Illinois Department of Transportation
Office of Planning and Programming
2300 South Dirksen Parkway / Springfield, Illinois / 62764

June 1, 2021

Ms. Renee Riani
Airport Manager
DeKalb Taylor Municipal Airport
3232 Pleasant Street
DeKalb, IL 60115

Ms. Riani,

The Illinois Department of Transportation's Airport Improvement Program provides funding for projects at airports throughout the state to ensure the continuation of safe and efficient operations at these facilities and maximize opportunities for economic development in Illinois.

The project detailed herein was selected for your airport based on project requests submitted to the Department during the Transportation Improvement Program (TIP) meetings. This program is based on Federal Aviation Administration (FAA) funding levels established in federal legislation which provide for a minimum of $1 million in entitlement funds for primary airports and a maximum of $150,000 entitlement funds for non-primary airports. Federal legislation calls for a maximum 90% federal participation. As such, the state and local match will be 5% each for all projects which are eligible for state funding. All other federal projects which are not eligible for state funds will require a minimum 10% local match.

Funding for the Illinois Airport Improvement Program is dependent upon receipt of Federal funds and legislative authorization of state appropriations. In addition, proposed development and land acquisition must be shown on an approved ALP, have cleared environmental processing, and the land already acquired or have a signed purchase agreement. For projects seeking Federal Discretionary Funds these requirements must be completed, and evidence of completion provided to Aeronautics by October 1, 2021 before a project can be considered for funding.

The Department and the Airport Sponsor hereby specifically agree that they shall pay the above defined percentages of all project costs. Airport sponsors shall be responsible to pay for all planning and design services at time of project letting and seek reimbursement within the project at the time of award. In addition, the GRANTEE shall pay such additional project costs which exceed the sum of the GRANTOR's funds and the Federal funds, as are herein committed for this Project. **In the event your project exceeds these budget totals, the Sponsor may elect to pay any additional project costs which exceed the total sum of state and federal funds as planned and programmed to complete the project. If additional funds are deemed necessary post award, an amendment to the Agency Agreement with the Department must be developed and approved by the Department and the FAA before any additional funding may be allocated.**

In the event the Illinois General Assembly fails to appropriate funds, or sufficient funds are otherwise not made available for these projects, the Airport Sponsor will be required to pay the state and local costs as itemized below. This will include any amount which exceeds the totals listed.

Projects were selected based on the FAA's National Priority System as well as other state and local priorities. The Department has programmed the following project to be included in the FFY 2022 Proposed Airport Improvement Program for your airport:

The project **"Remove & replace a portion of the aircraft parking apron"** will be funded as follows:

Federal State Apportionment Funds	$696,000
Non-Primary Entitlement Funds	$150,000
State Match	$47,000
Local Match	$47,000
Total Project Cost	$940,000

***If this project is seeking AIP Federal Discretionary Funds from the Federal Aviation Administration (FAA) until such time the funds are received by the Department this project is not guaranteed.**

The Office of Intermodal Project Implementation (Aeronautics) letting schedule for construction projects must be strictly followed to ensure projects are advertised and brought to letting in an organized manner. The letting schedule allows for 30 weeks to develop a project from the date of the pre-design meeting to the letting.

To ensure eligibility of professional services for state and federal funding participation, you are required to satisfy the qualifications based selection process and enter into a retainer agreement, or professional services A/E agreement with the consultant of record selected for the project prior to any costs being incurred. This should take place prior to the project initiation/pre-design meeting. Aeronautics will facilitate this process, as well as the initial development and review of fees.

The project contained in this letter is officially programmed for development provided all state and federal requirements have been met. It is now the Airport Sponsor's responsibility to initiate the professional services phase of the project. Please contact Aeronautics, either directly or through your consultant, to schedule a project initiation meeting.

Please contact Mr. Alan Mlacnik, P.E. – Bureau Chief of Airport Engineering at 217.785.4884 to initiate this project. **Please initiate this project within 12 months of the date of this letter or this project will no longer be considered programmed. Projects are initiated by scheduling a predesign meeting for design/construction projects or a project initiation meeting for planning and environmental projects.**

ATTACHMENT S

CURRENT IDOT PROVISIONAL PAYROLL BURDEN / FRINGE EXPENSE AND GENERAL / ADMINISTRATIVE EXPENSE RATE LETTER

Illinois Department of Transportation
2300 South Dirksen Parkway / Springfield, Illinois / 62764

October 25, 2021

Subject: PRELIMINARY ENGINEERING
Consultant Unit
Prequalification File

Roger Driskell
CRAWFORD, MURPHY, & TILLY, INC.
2750 West Washington Street
Springfield, IL 62702

Dear Roger Driskell,

We have completed our review of your "Statement of Experience and Financial Condition" (SEFC) which you submitted for the fiscal year ending Dec 31, 2020. Your firm's total annual transportation fee capacity will be $96,800,000.

Your firm's payroll burden and fringe expense rate and general and administrative expense rate totaling 166.83% are approved on a provisional basis. The rate used in agreement negotiations may be verified by our Bureau of Investigations and Compliance in a pre-award audit. Pursuant to 23 CFR 172.11(d), we are providing notification that we will post your company's indirect cost rate to the Federal Highway Administration's Audit Exchange where it may be viewed by auditors from other State Highway Agencies.

Your firm is required to submit an amended SEFC through the Engineering Prequalification & Agreement System (EPAS) to this office to show any additions or deletions of your licensed professional staff or any other key personnel that would affect your firm's prequalification in a particular category. Changes must be submitted within 15 calendar days of the change and be submitted through the Engineering Prequalification and Agreement System (EPAS).

Your firm is prequalified until December 31, 2021. You will be given an additional six months from this date to submit the applicable portions of the "Statement of Experience and Financial Condition" (SEFC) to remain prequalified.

Sincerely,
Jack Elston, P.E.
Bureau Chief
Bureau of Design and Environment

ATTACHMENT T

CONSULTANT'S PRELIMINARY ESTIMATE OF PROBABLE CONSTRUCTION COSTS

PRELIMINARY (35%) ENGINEER'S OPINION OF PROBABLE PROJECT COST

DEKALB TAYLOR MUNICIPAL AIRPORT
DEKALB, ILLINOIS

REMOVE AND REPLACE A PORTION OF THE AIRCRAFT PARKING APRON

ILLINOIS PROJECT NO.: DKB-4924
SBG PROJECT NO.: 3-17-SBGP-TBD

August 12, 2022

ITEM	DESCRIPTION	ESTIMATED QUANTITY	UNIT	ESTIMATED UNIT PRICE	ESTIMATED COST
AR150510	ENGINEER'S FIELD OFFICE	1	L SUM	$10,000.00	$10,000.00
AR150520	MOBILIZATION	1	L SUM	$41,510.52	$41,510.52
AR152410	UNCLASSIFIED EXCAVATION	1,100	CU YD	$36.00	$39,600.00
AR152480	SHOULDER ADJUSTMENT	400	SQ YD	$18.50	$7,400.00
AR156510	SILT FENCE	350	FOOT	$5.00	$1,750.00
AR156520	INLET PROTECTION	3	EACH	$200.00	$600.00
AR209606	CRUSHED AGG. BASE COURSE - 6"	4,970	SQ YD	$16.00	$79,520.00
AR401900	REMOVE BITUMINOUS PAVEMENT	4,885	SQ YD	$10.00	$48,850.00
AR501510	10" PCC PAVEMENT	4,920	SQ YD	$92.00	$452,640.00
AR501900	REMOVE PCC PAVEMENT	34	SQ YD	$73.00	$2,482.00
AR510900	REMOVE TIE DOWN	6	EACH	$500.00	$3,000.00
AR620520	PAVEMENT MARKING - WATERBORNE	3,000	SQ FT	$4.50	$13,500.00
AR705524	4" PERFORATED UNDERDRAIN W/SOCK	1,250	FOOT	$18.00	$22,500.00
AR705620	UNDERDRAIN END SECTION	1	EACH	$1,000.00	$1,000.00
AR705640	UNDERDRAIN CLEANOUT	10	EACH	$750.00	$7,500.00
AR751943	ADJUST MANHOLE	1	EACH	$1,500.00	$1,500.00
				ESTIMATED CONSTRUCTION COST =	$733,352.52
				DESIGN PROGRESSION (5%) =	$36,667.63
				ESTIMATED ADMINISTRATION/ENGINEERING/MISCELLANEOUS =	$170,000.00
				TOTAL ESTIMATED PROJECT COST =	$940,020.15
				OP&P PROGRAM LETTER (DATED 6/1/21) =	$940,000.00

ATTACHMENT U

RETAINER AGREEMENT

Exhibit A – Scope of Services

Including Illinois Department of Transportation – Division of Aeronautics and Federal Aviation Administration Standard Conditions

WHEREAS, the Owner intends to sponsor the accomplishment of a development program in stages of the public air navigation facilities known as the **DeKalb Taylor Municipal Airport** located in Latitude 41°56'01.8" N, Longitude 88° 42'20.5" W, in **DeKalb** County, State of Illinois; and

WHEREAS, the development program shall include projects described as:

1. Preparation of necessary applications, environmental documentation, airspace request and other documentation for FAA and IDOT DOA grant funding for projects within the 5-year Transportation Improvement Proposal.
2. Land acquisition/land acquisition reimbursement, including various plat preparation, such as appraisal plats, easements, plats of survey, etc., clear zone obstructions surveys, technical advice, and environmental site assessments.
3. Replace Existing VASI units on Runway Ends 2, 20 and 27 with PAPI Units.
4. Technical Assistance including Environmental Evaluations, Engineering review and consultation for the Reimbursement Request for the Purchase of the Snow Removal Equipment (SRE) Building – Phase 1 and 2.
5. Crack Repair and Remark Runway 2/20 including Rehabilitation evaluation and design for Runway 2/20 including lead-in connecting Taxiways.
6. Removal and Replacement or Rehabilitation of existing Aircraft Parking Aprons.
7. Overlay, Rehabilitation and Restore crown and grade for Runway 2/20 including lead-in connecting Taxiways.
8. Remove and Replace Perimeter Security Fencing.
9. Rehabilitation of T-Hangar Taxiway pavements, Parking Lots, Roads and Aprons, Phases 1, 2 and 3.
10. Airport Utility Relocation Design and Development, Various Phases. Develop preliminary engineering and plans for the relocation of necessary utilities on the airport including the accommodation of future Airport Developments.
11. Enlarge Existing 1st Detention Basin and Construct 2nd Detention basin to accommodate future development including stormwater design, evaluation and engineering.
12. Preliminary Engineering, Site Engineering for future Hangar development and expansion.
13. Relocation of Pleasant Street including alignment, engineering and plan development to accommodate East Frontal Area development.
14. Expand large aircraft parking apron including engineering for the necessary construction of the apron and any connecting taxiways.

WHEREAS, the Department of Transportation, Division of Aeronautics, State of Illinois, is authorized Agent of the Owner under the proposed development program (it shall be hereinafter referred to as the "Division");

WHEREAS, the Engineer agrees to furnish an executed "Certification of Engineer" and certain professional engineering services enumerated hereinafter, in connection with the aforesaid development project.

I. ENGINEERING SERVICES

The Engineer agrees to furnish and perform the various professional engineering services required for the preparation of the above reference construction project as follows:

(A.) The Planning Phase

1. Upon request by the Owner, the Engineer agrees to attend meetings and provide any professional advice, guidance and assistance in planning for the projects included in

February 13, 2023

Renee Riani
Airport Manager
DeKalb Taylor Municipal Airport
3232 Pleasant Street
DeKalb, Illinois 60115

Re: 21024803.00/08 *DeKalb Taylor Municipal Airport*
DeKalb, Illinois
IL Project: DKB-4924
SBG Project: 3-17-SBGP-TBD
Remove & Replace a Portion of the Aircraft Parking Apron
Agreement for Design/Special Services Phase Engineering

Dear Renee:

Enclosed are three (3) copies of the agreement for design/special services phase engineering on the above referenced project for review and execution. Upon execution of the agreement, please retain one (1) copy for your records and return the other two (2) copies to our office.

Should you have questions or require additional information, please contact our office.

Respectfully Submitted,

CRAWFORD, MURPHY & TILLY, INC.

Doug Klonowski, PE

Doug Klonowski, P.E.
Vice President/Aurora Office Co-Manager

3-28-23
mailed 2
signed copies
to CMT

Encls. (DPS/SS Agreement)
c: CMT – Contract File 21024802.00/08

K:\DekalbAp\21024802-00_RehabTermApron_ProjMan\Agreement\DPS\LT_CMT-DKB transmittal_DKB-4924_R&R Portion of Aircraft Parking Apron_DPS-SS Agreement_02132023.doc

Illinois Department of Transportation
Office of Planning and Programming
2300 South Dirksen Parkway / Springfield, Illinois / 62764

June 1, 2021

Ms. Renee Riani
Airport Manager
DeKalb Taylor Municipal Airport
3232 Pleasant Street
DeKalb, IL 60115

Ms. Riani,

The Illinois Department of Transportation's Airport Improvement Program provides funding for projects at airports throughout the state to ensure the continuation of safe and efficient operations at these facilities and maximize opportunities for economic development in Illinois.

The project detailed herein was selected for your airport based on project requests submitted to the Department during the Transportation Improvement Program (TIP) meetings. This program is based on Federal Aviation Administration (FAA) funding levels established in federal legislation which provide for a minimum of $1 million in entitlement funds for primary airports and a maximum of $150,000 entitlement funds for non-primary airports. Federal legislation calls for a maximum 90% federal participation. As such, the state and local match will be 5% each for all projects which are eligible for state funding. All other federal projects which are not eligible for state funds will require a minimum 10% local match.

Funding for the Illinois Airport Improvement Program is dependent upon receipt of Federal funds and legislative authorization of state appropriations. In addition, proposed development and land acquisition must be shown on an approved ALP, have cleared environmental processing, and the land already acquired or have a signed purchase agreement. For projects seeking Federal Discretionary Funds these requirements must be completed, and evidence of completion provided to Aeronautics by **October 1, 2021** before a project can be considered for funding.

The Department and the Airport Sponsor hereby specifically agree that they shall pay the above defined percentages of all project costs. Airport sponsors shall be responsible to pay for all planning and design services at time of project letting and seek reimbursement within the project at the time of award. In addition, the GRANTEE shall pay such additional project costs which exceed the sum of the GRANTOR's funds and the Federal funds, as are herein committed for this Project. **In the event your project exceeds these budget totals, the Sponsor may elect to pay any additional project costs which exceed the total sum of state and federal funds as planned and programmed to complete the project. If additional funds are deemed necessary post award, an amendment to the Agency Agreement with the Department must be developed and approved by the Department and the FAA before any additional funding may be allocated.**

In the event the Illinois General Assembly fails to appropriate funds, or sufficient funds are otherwise not made available for these projects, the Airport Sponsor will be required to pay the state and local costs as itemized below. This will include any amount which exceeds the totals listed.

Projects were selected based on the FAA's National Priority System as well as other state and local priorities. The Department has programmed the following project to be included in the FFY 2022 Proposed Airport Improvement Program for your airport:

The project **"Remove & replace a portion of the aircraft parking apron"** will be funded as follows:

Federal State Apportionment Funds	$696,000
Non-Primary Entitlement Funds	$150,000
State Match	$47,000
Local Match	$47,000
Total Project Cost	$940,000

***If this project is seeking AIP Federal Discretionary Funds from the Federal Aviation Administration (FAA) until such time the funds are received by the Department this project is not guaranteed.**

The Office of Intermodal Project Implementation (Aeronautics) letting schedule for construction projects must be strictly followed to ensure projects are advertised and brought to letting in an organized manner. The letting schedule allows for 30 weeks to develop a project from the date of the pre-design meeting to the letting.

To ensure eligibility of professional services for state and federal funding participation, you are required to satisfy the qualifications based selection process and enter into a retainer agreement, or professional services A/E agreement with the consultant of record selected for the project prior to any costs being incurred. This should take place prior to the project initiation/pre-design meeting. Aeronautics will facilitate this process, as well as the initial development and review of fees.

The project contained in this letter is officially programmed for development provided all state and federal requirements have been met. It is now the Airport Sponsor's responsibility to initiate the professional services phase of the project. Please contact Aeronautics, either directly or through your consultant, to schedule a project initiation meeting.

Please contact Mr. Alan Mlacnik, P.E. – Bureau Chief of Airport Engineering at 217.785.4884 to initiate this project. **Please initiate this project within 12 months of the date of this letter or this project will no longer be considered programmed. Projects are initiated by scheduling a predesign meeting for design/construction projects or a project initiation meeting for planning and environmental projects.**

Please contact me in the Office of Planning and Programming at 217.782.4118 or Richard Borus in Aeronautics at 217.785.0056 if you have questions regarding this program letter.

Sincerely,

BJ Murray

BJ Murray
Section Chief, Aviation Program Planning
Office of Planning and Programming

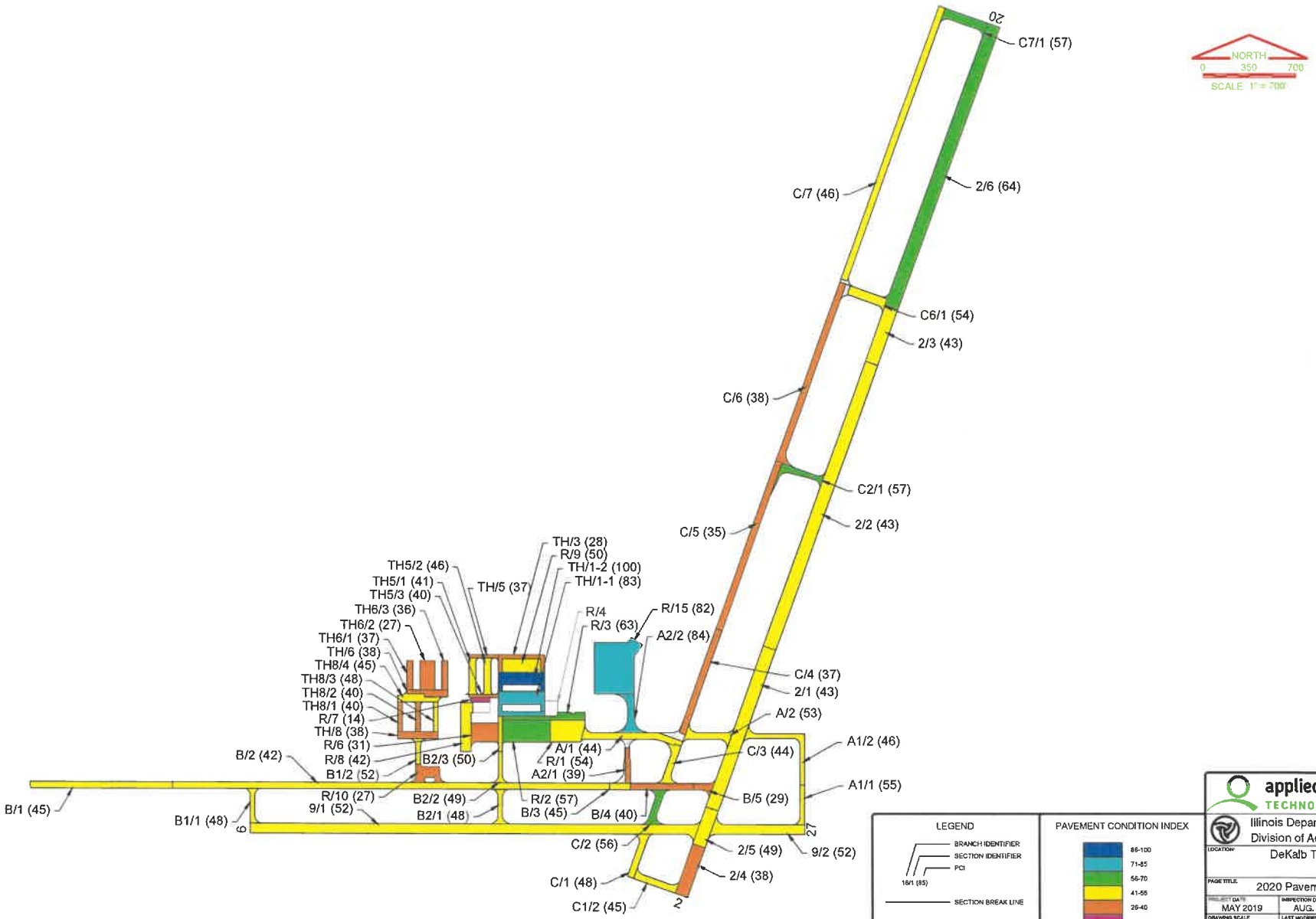

applied pavement TECHNOLOGY

115 W. Main Street, Suite 400
Urbana, IL 61801
Tel: (217) 366-3677
Fax: (217) 366-4087

Illinois Department of Transportation
Division of Aeronautics

LOCATION: DeKalb Taylor Municipal Airport
DeKalb, IL

PAGE TITLE: 2020 Pavement Condition Index Map

PROJECT DATE	INSPECTION DATE	PROJECT MANAGER	JOB NUMBER
MAY 2019	AUG. 2020	LR	2015-066-AM02
DRAWING SCALE	LAST MODIFIED DATE	REVISED BY	DRAWN BY
1"=700'	DEC. 2020	JLM	MK
FILENAME		LAYOUT NAME/NUMBER	PAGE NUMBER
DeKalb Taylor Municipal.dwg		PCI	X

IDOT Office of Intermodal Project Implementation – Aeronautics
Airport Pavement Management System
DeKalb Taylor Municipal Airport, DeKalb
2020 PCI Summary Information

Airport Name	Branch ID	Section ID	Surface Type[1]	Inspection Date	2020 PCI	Percent of Distress Due to:			Type of Distresses[4]	Total No. of Samples	No. Samples Inspected	Percent Samples Inspected[5]
						Climate/ Durability[2]	Load[3]	Other				
DeKalb Taylor Municipal Airport	2	1	AC	8/22/2020	43	84	16	0	Alligator Cracking, Block Cracking, L&T Cracking, Patching, Raveling, Weathering	26	8	31%
	2	2	AC	8/22/2020	43	75	25	0	Alligator Cracking, Block Cracking, L&T Cracking, Raveling, Weathering	46	7	15%
	2	3	AC	8/22/2020	43	76	24	0	Alligator Cracking, Block Cracking, L&T Cracking, Raveling, Weathering	8	4	50%
	2	4	AC	8/22/2020	38	83	17	0	Alligator Cracking, Block Cracking, L&T Cracking, Raveling, Weathering	8	4	50%
	2	5	AAC	8/22/2020	49	100	0	0	L&T Cracking, Raveling, Weathering	6	4	67%
	2	6	AC	8/22/2020	64	100	0	0	L&T Cracking, Weathering	44	7	16%
	9	1	AC	8/21/2020	52	84	16	0	Alligator Cracking, Block Cracking, L&T Cracking, Raveling, Weathering	44	7	16%
	9	2	AC	8/23/2020	52	87	13	0	Alligator Cracking, L&T Cracking, Raveling, Weathering	10	5	50%
	A1	1	AC	8/23/2020	55	88	12	0	Alligator Cracking, L&T Cracking, Raveling, Weathering	2	2	100%
	A1	2	AC	8/23/2020	46	88	12	0	Alligator Cracking, Block Cracking, L&T Cracking, Weathering	5	4	80%
	A2	1	AAC	8/21/2020	39	100	0	0	Block Cracking, L&T Cracking, Raveling, Weathering	1	1	100%
	A2	2	PCC	8/21/2020	84	64	0	36	Corner Spalling, Faulting, Joint Spalling, Joint Seal Damage, Shrinkage Cracking	4	3	75%
	A	1	AAC	8/21/2020	44	93	7	0	Alligator Cracking, Block Cracking, L&T Cracking, Patching, Raveling, Weathering	7	4	57%
	A	2	AC	8/23/2020	53	100	0	0	L&T Cracking, Raveling, Weathering	2	2	100%
	B1	1	AC	8/21/2020	48	83	10	7	Alligator Cracking, Block Cracking, Depression, L&T Cracking, Weathering	2	2	100%
	B1	2	AC	8/23/2020	52	100	0	0	L&T Cracking, Raveling, Weathering	1	1	100%
	B2	1	AC	8/21/2020	48	89	11	0	Alligator Cracking, Block Cracking, L&T Cracking, Raveling, Weathering	2	2	100%
	B2	2	AAC	8/21/2020	49	100	0	0	L&T Cracking, Patching, Weathering	1	1	100%
	B2	3	AAC	8/21/2020	50	100	0	0	L&T Cracking, Weathering	1	1	100%
	B	1	AAC	8/21/2020	45	82	18	0	Alligator Cracking, L&T Cracking, Raveling, Weathering	10	5	50%
	B	2	AAC	8/21/2020	42	81	19	0	Alligator Cracking, L&T Cracking, Raveling, Weathering	33	7	21%
	B	3	AAC	8/21/2020	45	82	18	0	Alligator Cracking, L&T Cracking, Raveling, Weathering	1	1	100%

IDOT Office of Intermodal Project Implementation – Aeronautics
Airport Pavement Management System
DeKalb Taylor Municipal Airport, DeKalb
2020 PCI Summary Information

Airport Name	Branch ID	Section ID	Surface Type[1]	Inspection Date	2020 PCI	Percent of Distress Due to:			Type of Distresses[4]	Total No. of Samples	No. Samples Inspected	Percent Samples Inspected[5]
						Climate/ Durability[2]	Load[3]	Other				
DeKalb Taylor Municipal Airport	B	4	AAC	8/21/2020	40	71	29	0	Alligator Cracking, L&T Cracking, Patching, Raveling, Weathering	4	3	75%
	B	5	AAC	8/23/2020	29	78	15	7	Alligator Cracking, Block Cracking, L&T Cracking, Patching, Raveling, Swelling, Weathering	1	1	100%
	C1	2	AC	8/21/2020	45	100	0	0	Block Cracking, Raveling, Weathering	2	2	100%
	C2	1	AC	8/22/2020	57	100	0	0	L&T Cracking, Weathering	2	2	100%
	C6	1	AC	8/22/2020	54	99	0	1	Block Cracking, Depression, L&T Cracking, Weathering	4	3	75%
	C7	1	AC	8/22/2020	57	100	0	0	L&T Cracking, Raveling, Weathering	4	3	75%
	C	1	AC	8/21/2020	48	80	20	0	Alligator Cracking, L&T Cracking, Raveling, Weathering	3	3	100%
	C	2	AC	8/21/2020	56	100	0	0	L&T Cracking, Raveling, Weathering	2	2	100%
	C	3	AC	8/21/2020	44	94	6	0	Alligator Cracking, Block Cracking, L&T Cracking, Raveling, Weathering	3	3	100%
	C	4	AC	8/21/2020	37	87	13	0	Alligator Cracking, Block Cracking, L&T Cracking, Raveling, Weathering	8	4	50%
	C	5	AC	8/21/2020	35	93	7	0	Alligator Cracking, Block Cracking, L&T Cracking, Raveling, Weathering	13	5	38%
	C	6	AC	8/21/2020	38	100	0	0	Block Cracking, L&T Cracking, Raveling, Weathering	14	5	36%
	C	7	AC	8/21/2020	46	100	0	0	Block Cracking, L&T Cracking, Raveling, Weathering	22	6	27%
	R	1	AAC	8/22/2020	54	100	0	0	Block Cracking, L&T Cracking, Patching, Raveling, Weathering	6	4	67%
	R	2	AAC	8/22/2020	57	90	10	0	Alligator Cracking, L&T Cracking, Raveling, Weathering	9	4	44%
	R	3	PCC	8/22/2020	63	20	0	80	ASR, Faulting, Joint Seal Damage	9	5	56%
	R	6	AC	8/22/2020	31	66	0	34	Block Cracking, Patching, Raveling, Swelling, Weathering	6	4	67%
	R	7	AC	8/22/2020	14	82	18	0	Alligator Cracking, L&T Cracking, Raveling, Weathering	1	1	100%
	R	8	AC	8/22/2020	42	96	0	4	Block Cracking, Depression, L&T Cracking, Raveling, Swelling, Weathering	4	3	75%
	R	9	AC	8/22/2020	50	90	10	0	Alligator Cracking, Depression, L&T Cracking, Raveling, Weathering	6	4	67%
	R	10	AC	8/23/2020	27	99	0	1	Block Cracking, L&T Cracking, Raveling, Swelling, Weathering	2	2	100%

IDOT Office of Intermodal Project Implementation – Aeronautics
Airport Pavement Management System
DeKalb Taylor Municipal Airport, DeKalb
2020 PCI Summary Information

Airport Name	Branch ID	Section ID	Surface Type[1]	Inspection Date	2020 PCI	Percent of Distress Due to:			Type of Distresses[4]	Total No. of Samples	No. Samples Inspected	Percent Samples Inspected[5]
						Climate/ Durability[2]	Load[3]	Other				
DeKalb Taylor Municipal Airport	R	15	PCC	8/22/2020	82	48	10	42	Corner Spalling, Faulting, Joint Spalling, Joint Seal Damage, LTD Cracking, Shrinkage Cracking	30	8	27%
	TH5	1	AC	44065	41	97	0	3	Depression, L&T Cracking, Raveling, Weathering	2	2	100%
	TH5	2	AC	8/22/2020	46	84	16	0	Alligator Cracking, L&T Cracking, Raveling, Weathering	2	2	100%
	TH5	3	AC	8/22/2020	40	98	0	2	L&T Cracking, Raveling, Swelling, Weathering	1	1	100%
	TH6	1	AC	8/23/2020	37	79	21	0	Alligator Cracking, L&T Cracking, Raveling, Weathering	2	2	100%
	TH6	2	AC	8/23/2020	27	82	18	0	Alligator Cracking, Block Cracking, L&T Cracking, Raveling, Weathering	4	3	75%
	TH6	3	AC	8/23/2020	36	82	18	0	Alligator Cracking, Block Cracking, L&T Cracking, Raveling, Weathering	2	2	100%
	TH8	1	AC	8/23/2020	40	93	7	0	Alligator Cracking, L&T Cracking, Raveling, Weathering	1	1	100%
	TH8	2	AC	8/23/2020	40	91	9	0	Alligator Cracking, L&T Cracking, Raveling, Weathering	1	1	100%
	TH8	3	AC	8/23/2020	48	100	0	0	L&T Cracking, Raveling, Weathering	1	1	100%
	TH8	4	AC	8/23/2020	45	87	13	0	Alligator Cracking, L&T Cracking, Raveling, Weathering	3	3	100%
	TH	3	AC	8/22/2020	28	74	24	2	Alligator Cracking, Block Cracking, L&T Cracking, Raveling, Swelling, Weathering	3	3	100%
	TH	5	AC	8/22/2020	37	87	13	0	Alligator Cracking, L&T Cracking, Raveling, Weathering	1	1	100%
	TH	6	AC	8/23/2020	38	86	14	0	Alligator Cracking, Block Cracking, L&T Cracking, Raveling, Weathering	2	2	100%
	TH	8	AC	8/23/2020	38	94	6	0	Alligator Cracking, L&T Cracking, Patching, Raveling, Weathering	3	3	100%
	TH	1-1	AC	8/22/2020	83	100	0	0	L&T Cracking, Weathering	10	5	50%
	TH	1-2	AC	8/22/2020	100	0	0	0	No distress	4	3	75%

NOTES:

[1] Surface Type: AC = asphalt cement concrete; AAC = asphalt overlay on AC; PCC = portland cement concrete; APC = asphalt overlay on PCC.

[2] Distresses due to climate or durability include those distresses attributed to either the aging of the pavement and the effects of the environment (such as weathering, raveling, or block cracking on asphalt pavements) or to a materials-related problem (such as durability cracking on a PCC pavement).

[3] Distresses due to load include those distresses attributed to a structural deficiency in the pavement, such as alligator cracking, rutting, or shattered PCC slabs.

[4] L&T Cracking = Longitudinal and Transverse Cracking; LTD Cracking = Longitudinal, Transverse, and Diagonal Cracking; ASR = Alkali-Silica Reaction.

[5] Percent Samples Inspected is calculated by dividing the No. Samples Inspected by the Total No. of Samples.

March 3, 2023

Illinois Department of Transportation
Division of Aeronautics
One Langhorne Drive
Capitol Airport
Springfield, Illinois 62707

Mr. Joe Staats, P.E.
Section Chief of Airport Design

RE: 21024802.00 *DEKALB TAYLOR MUNICIPAL AIRPORT*
DEKALB, ILLINOIS
ILLINOIS PROJECT NO.: DKB-4924
SBG PROJECT NO.: 3-17-SBGP-184
REMOVE AND REPLACE A PORTION OF THE AIRCRAFT PARKING APRON
FINAL 100% DESIGN SUBMITTAL

Dear Joe,

Enclosed is one (1) copy of our Final 100% Plans (Half Size), Specifications, Project Certification (Attachment N), Engineer's Opinion of Probable Cost, DBE Work Estimate and Estimate of Contract Time for your review on the above referenced project.

Should you have questions or require additional information, please contact our office.

Respectfully Submitted,

CRAWFORD, MURPHY & TILLY, INC.

Robert M. Heinz, P.E.
Senior Engineer

Encls. (Final 100% Submittal)
c: Renee Riani – DeKalb Taylor Municipal Airport
Doug Klonowski – CMT

LETTING ITEM NO. 01A
IDOT LETTING APRIL 28, 2023

DK063
TOTAL SHEETS = 18

CITY OF DEKALB
DEKALB COUNTY, ILLINOIS

CONSTRUCTION PLANS
FOR
DEKALB TAYLOR MUNICIPAL AIRPORT

REMOVE AND REPLACE A PORTION OF THE AIRCRAFT PARKING APRON

ILLINOIS PROJECT: DKB-4924
S.B.G. PROJECT: 3-17-SBGP-184

MARCH 3, 2023

INDEX TO SHEETS

SHEET NUMBER	SHEET TITLE
1	COVER SHEET - INDEX TO SHEETS
2	QUANTITIES
3	SITE PLAN AND CONTROL
4	CONSTRUCTION SAFETY PHASING PLAN (CSPP)
5	CONSTRUCTION SAFETY PHASING NOTES - 1
6	CONSTRUCTION SAFETY PHASING NOTES - 2
7	EXISTING CONDITIONS AND PROPOSED REMOVALS
8	TYPICAL SECTIONS
9	PROPOSED GEOMETRY AND JOINTING PLAN
10	PAVING DETAILS - 1
11	PAVING DETAILS - 2
12	STAKING PLAN
13	DRAINAGE AND LANDSCAPING PLAN
14	DRAINAGE DETAILS
15	INDEX TO SECTIONS
16	CROSS SECTIONS - 1
17	CROSS SECTIONS - 2
18	CROSS SECTIONS - 3

811 Know what's **below.** **Call** before you dig.

J.U.L.I.E.
JOINT UTILITY LOCATING
INFORMATION FOR EXCAVATORS
www.illinois1call.com

THE LOCATION, SIZE AND TYPE OF MATERIAL OF EXISTING UNDERGROUND UTILITIES INDICATED ON THE PLANS IS NOT REPRESENTED AS BEING ACCURATE, SUFFICIENT OR COMPLETE IT SHALL BE THE CONTRACTOR'S RESPONSIBILITY TO DETERMINE ACTUAL LOCATIONS OF ALL SUCH FACILITIES, INCLUDING SERVICE CONNECTIONS TO UNDERGROUND UTILITIES. PRIOR TO CONSTRUCTION, THE CONTRACTOR SHALL NOTIFY UTILITY COMPANIES OF HIS OPERATIONAL PLANS, OBTAIN FROM RESPECTIVE UTILITY COMPANIES DETAILED INFORMATION AND ASSISTANCE RELATIVE TO THE LOCATION OF THEIR FACILITIES AND THE WORKING SCHEDULE OF THE COMPANIES FOR REMOVAL OR ADJUSTMENT WHERE REQUIRED. IN THE EVENT AN UNEXPECTED UTILITY INTERFERENCE IS ENCOUNTERED DURING CONSTRUCTION, THE CONTRACTOR SHALL IMMEDIATELY NOTIFY THE UTILITY COMPANY OF JURISDICTION AND THE ONE-CALL NOTICE SYSTEM. THE ENGINEER SHALL ALSO BE IMMEDIATELY NOTIFIED. ANY SUCH UTILITY OR SERVICES SHALL BE RESTORED TO SERVICE AT ONCE AND PAID FOR BY THE CONTRACTOR AT NO ADDITIONAL COST TO THE CONTRACT.

CALL J.U.L.I.E. FOR UTILITY INFORMATION AT 811.

DTMA
DEKALB TAYLOR MUNICIPAL AIRPORT

CITY OF DEKALB
DEKALB TAYLOR MUNICIPAL AIRPORT
3232 PLEASANT STREET
DEKALB, ILLINOIS 60115
Telephone: 815.748.8102

APPROVED BY Renee Riani
RENEE RIANI/AIRPORT MANAGER
DATE MARCH 3, 2023

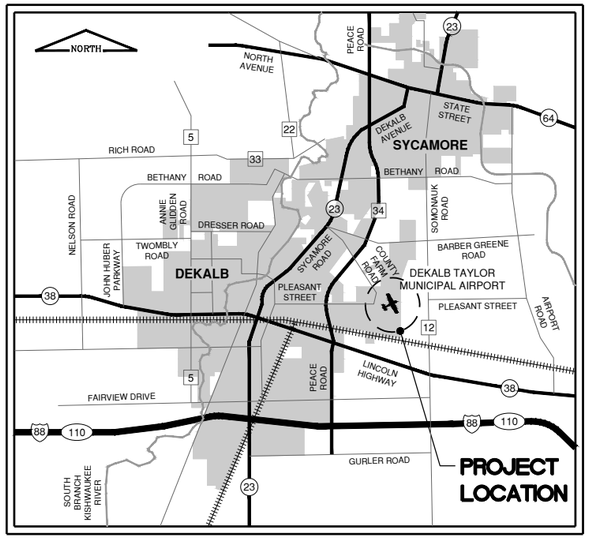

LOCATION MAP

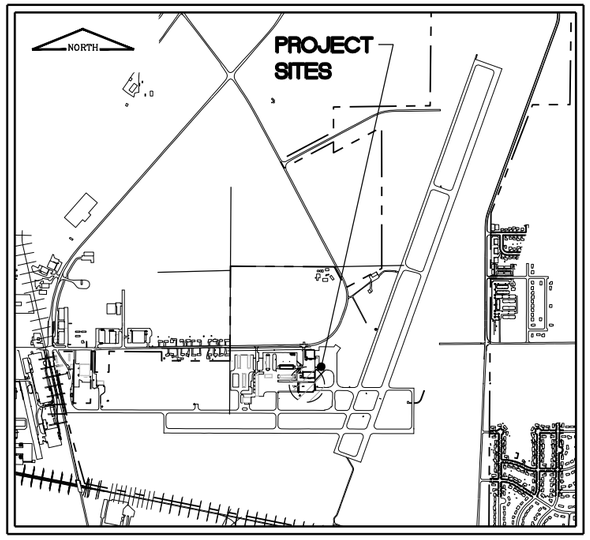

SITE PLAN

CALL J.U.L.I.E. BEFORE
EXCAVATING AT 811
DEKALB TAYLOR MUNICIPAL AIRPORT

TOWNSHIP: 40 NORTH
RANGE: 5 EAST
SECTION: 17, 18 AND 19
COUNTY: DEKALB
TOWNSHIP: CORTLAND

DESIGN INFORMATION

DESIGN AIRCRAFT APPROACH CATEGORY D
DESIGN AIRCRAFT GROUP III (GULFSTREAM V)

© Copyright CMT, Inc.

CMT
CRAWFORD, MURPHY & TILLY, INC.
CONSULTING ENGINEERS
License No. 184-000613

210248-02

LICENSED PROFESSIONAL ENGINEER
ROBERT M. HEINZ
062.071687
STATE OF ILLINOIS
Exp. 11/30/23

SUBMITTED BY
DATE MARCH 3, 2023

SUMMARY OF QUANTITIES

ITEM	DESCRIPTION	UNIT	QUANTITY	RECORD QUANTITY
AR150510	ENGINEER'S FIELD OFFICE	LS	1.00	
AR150520	MOBILIZATION	LS	1.00	
AR152410	UNCLASSIFIED EXCAVATION	CY	850.00	
AR152480	SHOULDER ADJUSTMENT	SY	600.00	
AR208515	POROUS GRANULAR EMBANKMENT	CY	225.00	
AR209606	CRUSHED AGGREGATE BASE COURSE - 6"	SY	5,350.00	
AR401610	BITUMINOUS SURFACE COURSE	TON	50.00	
AR401900	REMOVE BITUMINOUS PAVEMENT	SY	5,300.00	
AR403610	BITUMINOUS BASE COURSE	TON	250.00	
AR501510	10" PCC PAVEMENT	SY	4,950.00	
AR501530	PCC TEST BATCH	EACH	1.00	
AR501900	REMOVE PCC PAVEMENT	SY	35.00	
AR510900	REMOVE TIE DOWN	EACH	7.00	
AR510901	REMOVE TIE DOWN - TYPE A	EACH	5.00	
AR602510	BITUMINOUS PRIME COAT	GAL	110.00	
AR603510	BITUMINOUS TACK COAT	GAL	80.00	
AR620900	PAVEMENT MARKING REMOVAL	SF	1,450.00	
AR705526	6" PERFORATED UNDERDRAIN W/SOCK	LF	1,250.00	
AR705610	CONCRETE HEADWALL FOR UNDERDRAIN	EACH	1.00	
AR705640	UNDERDRAIN CLEANOUT	EACH	8.00	
AR705900	REMOVE UNDERDRAIN	LF	100.00	
AR705904	REMOVE UNDERDRAIN CLEANOUT	EACH	2.00	
AR901510	SEEDING	ACRE	0.15	
AR908515	HEAVY-DUTY HYDRAULIC MULCH	ACRE	0.15	

IL. CONTRACT: **DK063**
IL. LETTING ITEM: **01A**
IL. PROJECT: **DKB-4924**
S.B.G. PROJECT: **3-17-SBGP-184**

SURVEY BOOK # ----

REVISIONS

NUMBER	BY	DATE

0 1 2
THIS BAR IS EQUAL TO 2" AT FULL SCALE (34X22).

DEKALB TAYLOR MUNICIPAL AIRPORT
DEKALB, ILLINOIS
REMOVE AND REPLACE A PORTION OF THE AIRCRAFT PARKING APRON

QUANTITIES

©Copyright CMT, Inc.
CMT
CRAWFORD, MURPHY & TILLY, INC.
CONSULTING ENGINEERS
License No. 184-000613

DEKALB TAYLOR MUNICIPAL AIRPORT

DESIGN BY:	CMT-RFD
DRAWN BY:	CMT-RFD
CHECKED BY:	CMT-RFD
APPROVED BY:	DJK
DATE:	3/3/2023
JOB No:	210248-02

FINAL

SHEET 2 OF 18 SHEETS

XREF DWG: Dekalb 2022 Title Block.dwg
IMAGE FILES: DTMA Logo-black.jpg
UPDATE BY: Robert Heinz
LAYOUT: Layout1
DATE: Friday, March 3, 2023 1:34:36 PM
FILE: K:\DeKalbApr210248002-00_RehabTermApron\Draw\Sheets\210248002 - Quantities.dwg

LEGEND

- PROPOSED LIMITS OF PAVEMENT IMPROVEMENTS
- CONTRACTOR'S STAGING AREA
- EXISTING BUILDING
- EXISTING FENCE
- AIRPORT PROPERTY LINE
- HORIZONTAL/VERTICAL CONTROL POINT
- PROJECT REFERENCE POINT
- LOW PROFILE BARRICADES
- CONTRACTOR'S HAUL ROUTE
- FLAGGER/GATE GUARD LOCATION
- TOFA — TAXIWAY OBJECT FREE AREA
- CONSTRUCTION SETBACK LINE

HORIZONTAL / VERTICAL CONTROL POINTS (DATUM: NAD83)

NO.	NORTHING	EASTING	ELEVATION	DESCRIPTION
CP1	1917359.9910	878328.3570	903.47	NGS "KALBPORT AZ MK" - STEEL ROD IN SLEEVE
CP2	1917400.0500	879876.5500	907.81	NGS "KALBPORT" - STEEL ROD IN SLEEVE
CP3	1917929.0150	881645.7570	908.60	BEACON BASE - SOUTHWEST NUT
CP4	1917750.8370	881610.4240	909.26	CUT "X" SOUTH SIDE WATER VAULT STRUCTURE
CP5	1917548.0990	881631.3340	905.51	CUT "X" NORTH SIDE OF MANHOLE

ALIGNMENT DATA

ALIGNMENT SEGMENT	ALIGNMENT	BEGIN STATION/ PI STATION	NORTHING/ EASTING	END STATION/ CURVE RADIUS	NORTHING/ EASTING
L1	Alignment - taxiway a	STA. 408+00.00	N:1917658.9966 E:880465.0529	STA. 438+84.65	N: 1917652.3771 E: 883549.6974

PROJECT LAYOUT POINTS

NO.	NORTHING	EASTING	STATION / LOCATION
1	1917658.9966	880465.0529	STA. 408+00.00 CL TAXIWAY A (EXTENDED)
2	1917657.2754	881267.1508	STA. 416+02.10 CL TAXIWAY A STA. 7+09.50 CL TAXIWAY B2
3	1917655.2332	882218.7769	STA. 425+53.73 CL TAXIWAY A STA. 7+09.50 CL TAXIWAY B3
4	1917654.3520	882629.4171	STA. 429+64.37 CL TAXIWAY A STA. 211+43.48 CL TAXIWAY C
5	1917272.7766	881266.1510	STA. 316+01.11 CL TAXIWAY B STA. 3+25.00 CL TAXIWAY B2
6	1917270.7319	882218.9467	STA. 325+53.90 CL TAXIWAY B STA. 3+25.00 CL TAXIWAY B3

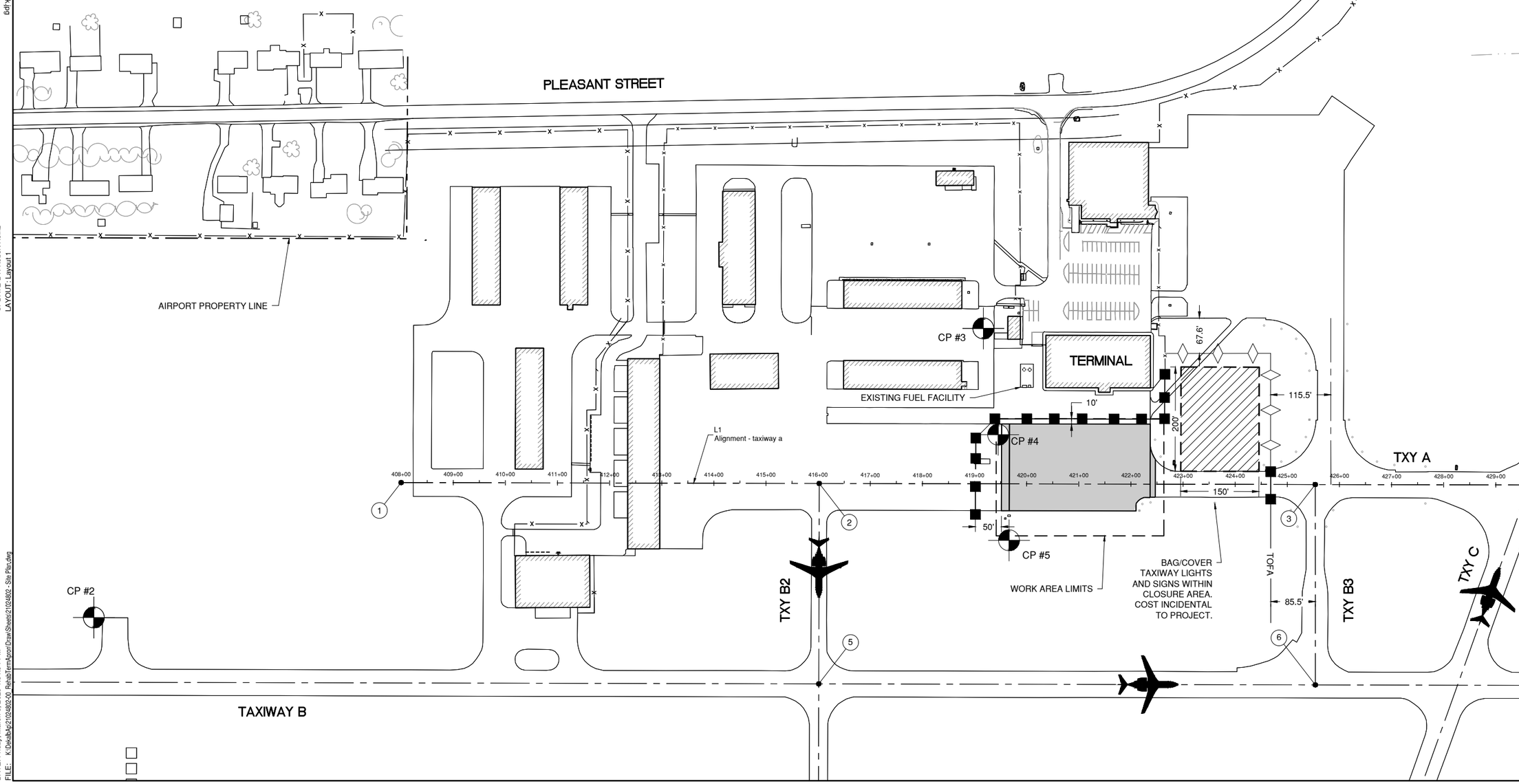

NORTH
0 100 200
SCALE IN FEET

IL. CONTRACT: **DK063**
IL. LETTING ITEM: **01A**
IL. PROJECT: **DKB-4924**
S.B.G. PROJECT: **3-17-SBGP-184**

SURVEY BOOK # ----

REVISIONS		
NUMBER	BY	DATE

0 1 2
THIS BAR IS EQUAL TO 2" AT FULL SCALE (34X22).

DEKALB TAYLOR MUNICIPAL AIRPORT
DEKALB, ILLINOIS
REMOVE AND REPLACE A PORTION OF THE AIRCRAFT PARKING APRON

SITE PLAN AND CONTROL

©Copyright CMT, Inc.

CMT
CRAWFORD, MURPHY & TILLY, INC.
CONSULTING ENGINEERS
License No. 184-000613

DEKALB TAYLOR MUNICIPAL AIRPORT

DESIGN BY:	CMT-RFD
DRAWN BY:	CMT-RFD
CHECKED BY:	CMT-RFD
APPROVED BY:	DJK
DATE:	3/3/2023
JOB No:	210248-02

FINAL

SHEET 3 OF 18 SHEETS

XREF DWG: Dekalb 2022 Title Block.dwg
21024802 - dekalb base.dwg
21024802 - dekalb alignments.dwg
21024802 - dekalb utility base.dwg
IMAGE FILES: DTMA Logo-black.jpg
UPDATE BY: Robert Heinz
LAYOUT: Layout 1
DATE: Friday, March 3, 2023 1:34:54 PM
FILE: K:\DeKalbApr\210248\02-00_RehabTermApron\Draw\Sheets\210248\02 - Site Plan.dwg

LEGEND

- PROPOSED LIMITS OF PAVEMENT IMPROVEMENTS
- CONTRACTOR'S STAGING AREA
- EXISTING BUILDING
- EXISTING FENCE
- AIRPORT PROPERTY LINE
- HORIZONTAL/VERTICAL CONTROL POINT
- PROJECT REFERENCE POINT
- LOW PROFILE BARRICADES
- CONTRACTOR'S HAUL ROUTE
- FLAGGER/GATE GUARD LOCATION
- TOFA — TAXIWAY OBJECT FREE AREA
- CONSTRUCTION SETBACK LINE

FAA CRITICAL POINT TABLE

POINT	LATITUDE	LONGITUDE	ELEVATION	OBSTRUCTION HEIGHT	ABOVE GROUND ELEVATION
100	N41° 55' 50.94"	W88° 42' 38.51"	908	25	933
101	N41° 55' 52.31"	W88° 42' 38.51"	909	25	934
102	N41° 55' 52.68"	W88° 42' 38.02"	909	25	934
103	N41° 55' 52.71"	W88° 42' 33.72"	908	25	933
104	N41° 55' 53.93"	W88° 42' 33.71"	907	25	932
105	N41° 55' 53.94"	W88° 42' 31.03"	904	25	929
106	N41° 55' 51.46"	W88° 42' 31.02"	905	25	930
107	N41° 55' 50.47"	W88° 42' 33.72"	902	25	927
108	N41° 55' 50.46"	W88° 42' 37.98"	906	25	931

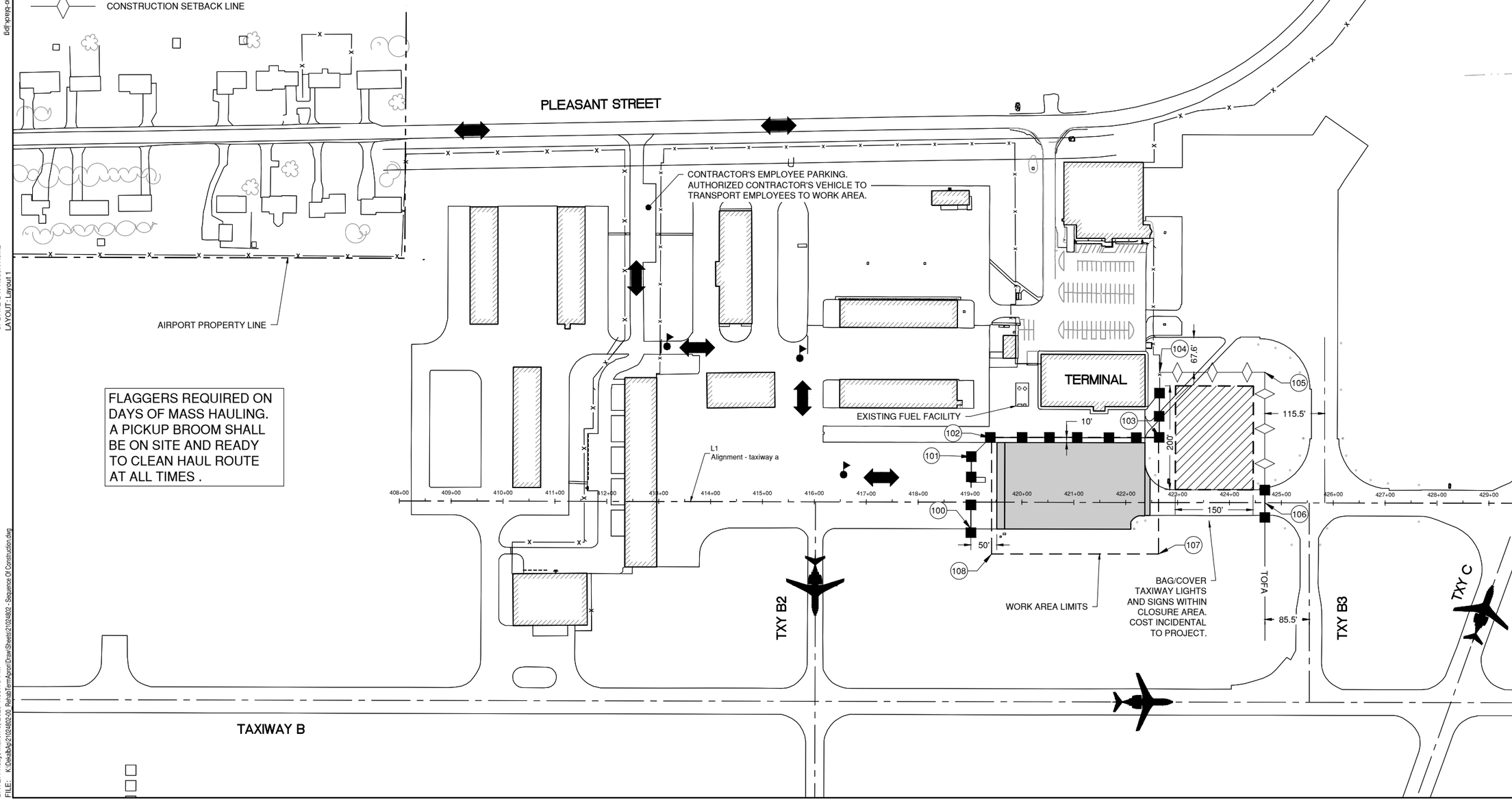

FLAGGERS REQUIRED ON DAYS OF MASS HAULING. A PICKUP BROOM SHALL BE ON SITE AND READY TO CLEAN HAUL ROUTE AT ALL TIMES .

NORTH
0 100 200
SCALE IN FEET

IL. CONTRACT: **DK063**
IL. LETTING ITEM: **01A**
IL. PROJECT: **DKB-4924**
S.B.G. PROJECT: **3-17-SBGP-184**

SURVEY BOOK # ----

REVISIONS		
NUMBER	BY	DATE

0 1 2
THIS BAR IS EQUAL TO 2" AT FULL SCALE (34X22).

DEKALB TAYLOR MUNICIPAL AIRPORT
DEKALB, ILLINOIS
REMOVE AND REPLACE A PORTION OF THE AIRCRAFT PARKING APRON

CONSTRUCTION SAFETY PHASING PLAN (CSPP)

©Copyright CMT, Inc.

CMT
CRAWFORD, MURPHY & TILLY, INC.
CONSULTING ENGINEERS
License No. 184-000613

DTMA
DEKALB TAYLOR MUNICIPAL AIRPORT

DESIGN BY:	CMT-RFD
DRAWN BY:	CMT-RFD
CHECKED BY:	CMT-RFD
APPROVED BY:	DJK
DATE:	3/3/2023
JOB No:	210248-02

FINAL

SHEET 4 OF 18 SHEETS

XREF DWG: Dekalb 2022 Title Block.dwg
21024802 - dekalb base.dwg
21024802 - dekalb alignments.dwg
21024802 - dekalb utility base.dwg
IMAGE FILES: DTMA Logo-black.jpg
UPDATE BY: Robert Hubert Rq. Y. Bennett
LAYOUT: Layout 1
DATE: Friday, March 3, 2023 1:35:13 PM
FILE: K:\DeKalbApt\210248\02-00_RehabTermApron\Draw\Sheets\210248\02 - Sequence Of Construction.dwg

GENERAL

1. THE CONTRACTOR AND ALL SUBCONTRACTORS SHALL FOLLOW THE REQUIREMENTS OF THE AIRPORT'S APPROVED CONSTRUCTION SAFETY AND PHASING PLAN (CSPP), FAA AC 150/5370-2G OR LATEST EDITION, AND ALL AIRPORT SAFETY AND SECURITY REQUIREMENTS.

2. PRIOR TO THE NOTICE TO PROCEED, THE CONTRACTOR SHALL SUBMIT TO THE AIRPORT THROUGH THE RESIDENT ENGINEER, FOR APPROVAL A SAFETY PLAN COMPLIANCE DOCUMENT (SPCD) IN ACCORDANCE WITH FAA AC 150/5370-2G OR LATEST EDITION. NO CONSTRUCTION ACTIVITY SHALL BEGIN UNTIL THE AIRPORT HAS APPROVED THE SPCD.

3. THE CSPP COVERS OPERATIONAL SAFETY. THE CONTRACTOR SHALL BE RESPONSIBLE FOR THE INDIVIDUAL SAFETY OF HIS/HER PERSONNEL AND MEETING OSHA REQUIREMENTS.

4. A MINIMUM OF 10 DAYS PRIOR TO THE NOTICE TO PROCEED THE CONTRACTOR SHALL PROVIDE A LIST OF SUBCONTRACTORS AND MATERIAL SUPPLIERS.

5. ALL CONTRACTOR COSTS ASSOCIATED WITH THE REQUIREMENTS LISTED ON THIS SHEET SHALL BE CONSIDERED INCIDENTAL TO THE CONTRACT.

1. COORDINATION

1. PRIOR TO THE START OF CONSTRUCTION THE CONTRACTOR SHALL ATTEND A PRE-CONSTRUCTION CONFERENCE WITH THE AIRPORT, RESIDENT ENGINEER, AND ILLINOIS DIVISION OF AERONAUTICS (IDA). THE COST OF PREPARING FOR AND ATTENDING THE PRE-CONSTRUCTION CONFERENCE SHALL BE INCIDENTAL TO THE CONTRACT.

2. ON OR BEFORE THE PRE-CONSTRUCTION CONFERENCE, THE CONTRACTOR SHALL SUBMIT A PROPOSED SCHEDULE FOR THE PROJECT. THE SCHEDULE SHALL INCLUDE A START AND COMPLETION DATE FOR EACH ITEM OF WORK. THE SCHEDULE SHALL BE UPDATED ON A WEEKLY BASIS. ALL COSTS ASSOCIATED WITH THE SCHEDULE SHALL BE INCIDENTAL TO THE CONTRACT.

3. DURING CONSTRUCTION THE CONTRACTOR SHALL ATTEND A WEEKLY COORDINATION MEETING WITH THE AIRPORT STAFF AND RESIDENT ENGINEER. ALL COSTS ASSOCIATED WITH ATTENDING THE WEEKLY MEETING SHALL BE INCIDENTAL TO THE CONTRACT.

2. PHASING

1. TOTAL CONTRACT TIME SHALL BE 47 CALENDAR DAYS.

2. PHASING SHALL BE AS NOTED BELOW AND AS SHOWN ON THE SITE PLAN SHEETS.

   WORK AREAS AND DESCRIPTIONS

   MOBILIZATION

   COMPLETE MOBILIZATION DURING THE MOBILIZATION TIME PERIOD.

   WORK AREAS

   WORK AREA GENERALLY INCLUDES PAVEMENT REMOVALS, UNDERGROUND DRAIN REMOVALS, UNCLASSIFIED EXCAVATION, UNDERDRAIN IMPROVEMENTS, CONCRETE PAVING, ASPHALT PAVING, AND LANDSCAPING.

RESTRICTIONS

GENERAL (ALL WORK AREAS)

ALL WORK AREAS ARE LOCATED INSIDE THE AOA SECURITY FENCE, AND ARE SUBJECT TO THE LIMITATIONS DESCRIBED IN SPECIFICATIONS, PART 1 - GENERAL PROVISIONS.

WORK CONDUCTED UTILIZING EXTENDED CLOSURES OF AIRFIELD PAVEMENTS AS INDICATED IN THE PLANS WILL ALLOW THE CONTRACTOR TO CONDUCT WORK 24 HOURS A DAY, 7 DAYS A WEEK OR UNLESS SPECIFICALLY NOTED FOR THE RESTRICTIONS IN EACH WORK AREA. THE CLOSURES WILL ALLOW THE CONTRACTOR TO COMPLETE ALL WORK INSIDE THE RESPECTIVE TOFA, OFZ OR RSA, AND TO A DISTANCE OUTSIDE THESE AREAS AS NOT TO RE-ENCROACH THE TOFA, OFZ OR RSA WITH MANPOWER OR EQUIPMENT ONCE THE CLOSURE PERIOD IS CONCLUDED.

SIMULTANEOUS CLOSURES OF AIRFIELD PAVEMENTS TO COMPLETE WORK IN MORE THAN ONE WORK AREA AT A TIME WILL NOT BE ALLOWED EXCEPT AS SPECIFCALLY NOTED.

THE APRON MUST BE OPEN FOR THE AIRVENTURE OSHKOSH FLY-IN SCHEDULED IN JULY. THE TIME PERIOD OF **JULY 4 - JULY 31, 2024** SHALL HAVE ALL PAVEMENT AREAS AVAILABLE FOR USE FOR AIR TRAFFIC. THIS EVENT MUST BE ACCOUNTED FOR IN THE CONSTRUCTION SCHEDULE.

WORK AREA 1A

AN EXTENDED CLOSURE OF A PORTION OF THE APRON AND TAXIWAY A IS REQUIRED TO COMPLETE WORK. TAXIWAY A WILL BE CLOSED WEST OF TAXIWAY B3. ALL LOCATIONS WITHIN THE TOFA WILL BE RESTORED TO FAA SAFETY CRITERIA BEFORE RE-OPENING THE TAXIWAYS AT END OF THE CLOSURE PERIOD.

3. AREAS AND OPERATIONS AFFECTED BY THE CONSTRUCTION ACTIVITY

1. ALL RUNWAYS, TAXIWAYS AND APRONS SHALL BE KEPT OPEN TO AIRCRAFT TRAFFIC DURING CONSTRUCTION EXCEPT AS NOTED ON THE PHASING PLAN.

2. WHEN CONFLICTS ARISE BETWEEN CONSTRUCTION ACTIVITIES AND AIRCRAFT OPERATIONS AND SAFETY, AIRCRAFT OPERATIONS AND SAFETY SHALL TAKE PRECEDENCE AND SHALL GOVERN. FINAL AUTHORITY IN THE APPROVAL OF CONSTRUCTION SEQUENCING LIES WITH THE AIRPORT.

3. ALL CONSTRUCTION TRAFFIC SHALL IMMEDIATELY YIELD TO ONCOMING AIRCRAFT AT ALL TIMES.

4. NAVAIDS THAT COULD BE AFFECTED

1. THE CONTRACTOR MUST COORDINATE WITH AIRPORT OPERATIONS/ENGINEER IN ADVANCE FOR ANY WORK WITHIN A NAVAID CRITICAL AREA OR AFFECTING THE VISUAL, TRANSMITTED SIGNAL OR POWER SUPPLY OF A NAVAID.

2. EDGE LIGHTS, THRESHOLD LIGHTS, VISUAL AIDS AND ALL ILS EQUIPMENT SHALL BE SHUT OFF FOR THE DURATION OF A CLOSURE PERIOD ON ANY ASSOCIATED PAVEMENTS. IF THE LIGHTING CIRCUIT MUST BE ON FOR OPEN PAVEMENT AREAS, CLOSED PAVEMENT AREA LIGHTS SHALL BE COVERED COMPLETELY.

3. EXCEPT WHERE NOTED IN THE PLANS, EXISTING COMMUNICATIONS EQUIPMENT AND NAVIGATIONAL AIDS (NAVAIDS) SHALL NOT BE DISTURBED BY THE CONTRACTOR AND SHALL BE PROTECTED FROM DAMAGE.

4. PRIOR TO BEGINNING SITE WORK, CONTRACTOR SHALL COORDINATE THROUGH AIRPORT OPERATIONS TO LOCATE, AND THE CONTRACTOR TO MARK ALL UNDERGROUND COMMUNICATIONS CABLES AND FACILITIES, WITHIN THE PROJECT AREA.

5. IF CONTRACTOR CAUSES INTERRUPTION OF POWER OR COMMUNICATIONS TO A NAVAID CONTRACTOR SHALL REPAIR WITHIN 24 HOURS AT THE CONTRACTOR'S COST. CONTRACTOR MUST COORDINATE REPAIR WITH AIRPORT OPERATIONS BEFORE ANY REPAIR IS MADE.

5. CONTRACTOR ACCESS

1. CONTRACTOR ACCESS SHALL BE AS NOTED BELOW AND AS SHOWN ON THE SITE PLAN AND CONSTRUCTION ACTIVITY PLAN SHEETS. ALL COSTS RELATING TO CONTRACTOR'S ACCESS AND SECURITY SHALL BE THE RESPONSIBILITY OF THE CONTRACTOR.

2. THE CONTRACTOR IS TO ACCESS THE SITE USING THE GATE(S) SHOWN. THE CONTRACTOR SHALL BE RESPONSIBLE FOR KEEPING THE ACCESS GATE CLOSED DURING WORK HOURS.

3. CONTRACTOR SHALL OBTAIN ALL NECESSARY PERMITS AND TEMPORARY EASEMENTS FOR THE PUBLIC ACCESS ROAD(S) SHOWN AND SHALL COMPLY WITH ALL REQUIREMENTS, LOAD RESTRICTIONS, & TRAFFIC CONTROL SIGNAGE REQUIRED BY THE CITY, COUNTY, TOWNSHIP, OR I.D.O.T.

4. CONTRACTOR'S VEHICLES AND EQUIPMENT SHALL BE MARKED AND FLAGGED PER SECTION 70-10 OF THE STANDARD SPECIFICATIONS. MAXIMUM HEIGHT OF CONTRACTOR'S EQUIPMENT WILL BE 25'.

5. DRIVERS OF TRUCKS CONTAINING MATERIAL DELIVERIES (AGGREGATE, ASPHALT, ETC.) NEED NOT OBTAIN AN AIRPORT ID BADGE BUT SHALL BE REQUIRED TO SUBMIT THEIR NAME, DRIVER'S LICENSE NUMBER, TRUCK LICENSE PLATE NUMBER AND NAME OF TRUCKING COMPANY TO THE PRIME CONTRACTOR PRIOR TO ENTERING THE JOBSITE. WHILE INSIDE THE AOA FENCE, THE TRUCK DRIVERS SHALL BE ESCORTED BY THE CONTRACTOR PERSONNEL THAT HAS OBTAINED PROPER DRIVING PRIVILEGES.

6. CONTRACTOR WORK CREWS MUST MAINTAIN RADIO CONTACT WITH THE AIRPORT UNICOM (122.70 MHZ) AT ALL TIMES WHEN INSIDE THE AIRPORT OPERATIONS AREA (AOA). THE CONTRACTOR SHALL SUPPLY ALL APPROPRIATE RADIOS NEEDED FOR COMMUNICATIONS AND ONLY HIS PERSONNEL WHO HAVE SUCCESSFULLY SATISFIED THE AIRPORT OF THEIR COMPETENCE MAY OPERATE THESE RADIOS.

7. THE CONTRACTORS STORAGE AND STAGING AREAS WILL BE AS SHOWN ON THE SITE PLAN.

8. THE CONTRACTOR SHALL KEEP A RECORD OF THE NAMES OF ALL EMPLOYEES ENTERING THE JOB SITE ON A DAILY BASIS. A RECORD OF EACH SUBCONTRACTOR ENTERING THE JOB SITE SHALL ALSO BE KEPT BY THE CONTRACTOR.

9. WHEN THE CONTRACTOR IS NOT WORKING, EQUIPMENT SHALL BE STORED AT THE STAGING AREAS.

10. DURING ADVERSE WEATHER THE CONTRACTOR SHALL MAINTAIN ACCESS TO THE WORK AT NO ADDITIONAL COST TO THE CONTRACT. NO EXTENSION OF THE CONTRACT TIME WILL BE CONSIDERED FOR DELAYS DUE TO LACK OF ADEQUATE ACCESS TO THE WORK SITE.

11. THE CONTRACTOR WILL BE PERMITTED TO STORE EQUIPMENT AND MATERIALS ONLY AT THE LOCATIONS SHOWN. PARKED EQUIPMENT AND MATERIAL STOCKPILES SHALL NOT PENETRATE SURFACES DEFINED BY F.A.R. TITLE 14 PART 77 - OBJECTS AFFECTING NAVIGABLE AIRSPACE. **EXISTING TURF AREAS DISTURBED BY THE CONTRACTOR'S OPERATIONS SHALL BE RESTORED BY HIM AT HIS EXPENSE TO THE SATISFACTION OF THE RESIDENT ENGINEER AND THE AIRPORT.**

12. ALL CONSTRUCTION TRAFFIC OPERATING ON, OR CROSSING RUNWAYS, TAXIWAYS AND APRONS OPEN TO AIRCRAFT TRAFFIC SHALL BE UNDER CONTROL BY A FLAGMAN OR ESCORT IN RADIO CONTACT WITH THE COMMON TRAFFIC ADVISORY FREQUENCY. THE CONTRACTOR SHALL PROVIDE HIS OWN FLAGMEN.

13. THE CONTRACTOR SHALL THOROUGHLY CLEAN ALL CONSTRUCTION AREAS AND HAUL ROUTES WHICH WILL BE OPENED TO AIR TRAFFIC TO THE SATISFACTION OF AIRPORT OPERATIONS OR THE RESIDENT ENGINEER. A POWER BROOM AND OPERATOR SHALL BE ON SITE AT ALL TIMES WHEN ACTIVE PAVEMENTS ARE UTILIZED FOR CONSTRUCTION TRAFFIC.

14. ALL PAVEMENTS, DRIVES OR ANY OTHER AREAS UTILIZED BY THE CONTRACTOR FOR HAUL ROADS OR STORAGE AREAS SHALL BE MAINTAINED AND REPAIRED TO THE SAME CONDITION OR BETTER THAN THEY WERE PRIOR TO BEGINNING CONSTRUCTION. NO ADDITIONAL COMPENSATION WILL BE MADE TO THE CONTRACTOR FOR THIS WORK.

15. ALL VEHICLE AND EQUIPMENT OPERATORS USED BY THE CONTRACTOR SHALL BE PROPERLY TRAINED BY THE CONTRACTOR.

16. THE CONTRACTOR SHALL NOTIFY THE AIRPORT IF CONSTRUCTION ACTIVITY WILL REQUIRE THE BLOCKAGE OF EMERGENCY ACCESS TO THE AIRPORT.

6. WILDLIFE MANAGEMENT

1. THE CONTRACTOR SHALL NOTIFY THE AIRPORT OR THE RESIDENT ENGINEER IF ANY WILDLIFE IS SEEN ENTERING THE AIRPORT.

2. CONTRACTOR ACCESS GATES SHALL REMAIN CLOSED WHEN THE CONTRACTOR IS NOT WORKING.

3. THE CONTRACTOR SHALL DISPOSE OF ALL TRASH INCLUDING FOOD SCRAPS IN APPROVED CONTRACTOR PROVIDED CONTAINERS.

7. FOREIGN OBJECT DEBRIS (FOD) MANAGEMENT

1. THE CONTRACTOR SHALL PICK UP ANY FOREIGN OBJECT DEBRIS (FOD) SEEN ON THE AIRFIELD PAVEMENTS.

2. THE CONTRACTOR SHALL SECURE ALL LOOSE ITEMS FROM VEHICLES PRIOR TO DRIVING ON AIRFIELD PAVEMENTS.

8. HAZARDOUS MATERIALS (HAZMAT) MANAGEMENT

1. THE CONTRACTOR SHALL DEVELOP A HAZMAT MANAGEMENT PLAN AND KEEP COPIES ON THE JOBSITE OF MATERIAL SAFETY DATA SHEETS (MSDS) FOR ALL MATERIALS HANDLED ON THE JOBSITE.

9. NOTIFICATION OF CONSTRUCTION ACTIVITIES

1. THE CONTRACTOR SHALL PROVIDE A 24 HOUR EMERGENCY CONTACT PERSON AND PHONE NUMBER.

2. THE CONTRACTOR SHALL GIVE A MINIMUM OF 10 DAYS NOTICE TO THE FAA AND AIRPORT PRIOR TO THE CLOSURE OF ANY RUNWAY SO THAT THE FAA MAY DEACTIVATE THE FAA - OWNED NAVAIDS.

3. THE CONTRACTOR SHALL GIVE A MINIMUM 30 DAYS NOTICE TO THE AIRPORT, AND PRIOR TO THE PRE-CONSTRUCTION CONFERENCE, PRIOR TO CLOSING ANY RUNWAY OR TAXIWAY PAVEMENT SO THAT THE PROPER NOTAMS MAY BE ISSUED BY THE AIRPORT FOR COORDINATION WITH THE AIRPORT TENANTS.

4. FOR ANY EQUIPMENT USED BY THE CONTRACTOR WITH A HEIGHT GREATER THAN 25', THE CONTRACTOR SHALL PROVIDE TO THE AIRPORT THE TYPE OF EQUIPMENT, TOTAL HEIGHT, AND LOCATION WHERE THE EQUIPMENT WILL BE USED. THE AIRPORT WILL SUBMIT FAA FORM 7460-1 TO THE FAA FOR AN AIRSPACE STUDY. NO EQUIPMENT WITH A HEIGHT GREATER THAN 25' SHALL BE USED UNTIL A DETERMINATION FROM FAA IS RECEIVED.

5. IN THE EVENT OF AN EMERGENCY, THE CONTRACTOR SHALL CALL 911.

10. INSPECTION REQUIREMENTS

1. THE CONTRACTOR SHALL INSPECT THE JOBSITE DAILY TO ENSURE COMPLIANCE WITH THE CSPP. THE CHECKLIST FOUND IN APPENDIX 3 OF FAA AC 150/5370-2G OR LATEST EDITION MAY BE USED TO AID IN THE INSPECTIONS.

2. THE CONTRACTOR SHALL REQUEST OPERATIONAL INSPECTION OF EACH PHASE WORK AREA PRIOR THE AREA BEING REOPENED. THE AIRPORT WILL DETERMINE IF THE WORK AREA IS ALLOWED TO BE OPENED.

11. UNDERGROUND UTILITIES

1. IT WILL BE NECESSARY FOR THE CONTRACTOR TO MAKE HIS OWN FIELD INVESTIGATION TO DETERMINE THE EXACT LOCATION OF THE UNDERGROUND UTILITIES AT CRITICAL POINTS. THE LOCATION OF UNDERGROUND UTILITIES AS INDICATED ON THE PLANS HAS BEEN OBTAINED FROM EXISTING RECORDS. NEITHER THE OWNER NOR THE ENGINEER ASSUMES ANY RESPONSIBILITY IN RESPECT TO THE ACCURACY, COMPLETENESS OR SUFFICIENCY OF THE INFORMATION. ANY UTILITY, INCLUDING AIRFIELD ELECTRICAL CABLE AND LIGHTS, DAMAGED BY THE CONTRACTOR SHALL BE REPAIRED BY HIM AT HIS OWN EXPENSE IN A MANNER WHICH IS SATISFACTORY TO THE ENGINEER AND TO THE OWNER OF THE UTILITY. ANY REPAIRS THAT MUST BE MADE BY THE OWNER OF THE UTILITY SHALL HAVE THE COST REIMBURSED TO THE UTILITY BY THE CONTRACTOR. AIRFIELD LIGHTING CABLES DAMAGED BY THE CONTRACTOR SHALL BE REPAIRED BY A QUALIFIED ELECTRICIAN WITH THE COSTS TO BE BORNE BY THE CONTRACTOR.

2. BEFORE INITIATING ANY DIGGING, DRILLING OR EXCAVATING ON THE AIRPORT PROPERTY, THE CONTRACTOR SHALL CALL J.U.L.I.E. AND CONTACT THE LOCAL FAA OFFICE TO ARRANGE FOR UTILITY LOCATES. SEE SECTION 70-17 OF THE SPECIAL PROVISIONS FOR UTILITY CONTACT INFORMATION.

12. PENALTIES

1. NONCOMPLIANCE BY THE CONTRACTOR WITH AIRPORT RULES AND REGULATIONS OR FAILURE TO COMPLY WITH THE AIRPORT'S APPROVED CSPP AND THE CONTRACTOR'S APPROVED SPCD MAY RESULT IN FINES AS ALLOWED BY LAW.

13. SPECIAL CONDITIONS

1. ADJACENT CONSTRUCTION MAY IMPACT THE OPERATIONS OF THE CONTRACTOR. SEE THE COORDINATION NOTES FOR ADDITIONAL INFORMATION.

14. RUNWAY AND TAXIWAY VISUAL AIDS

1. ALL RUNWAYS, TAXIWAYS, AND APRONS SHALL BE KEPT OPEN TO AIRPORT TRAFFIC DURING CONSTRUCTION EXCEPT AS NOTED IN THE CONSTRUCTION ACTIVITY PLAN.

2. IF ANY RUNWAY OR TAXIWAY CLOSURES ARE REQUESTED BY THE CONTRACTOR AND APPROVED BY THE AIRPORT, THE CONTRACTOR SHALL USE MARKING, LIGHTING AND SIGNS THAT FOLLOWING THE REQUIREMENTS OF FAA AC 150/5370-2G OR LATEST EDITION.

15. MARKING AND SIGNS FOR ACCESS ROUTES

1. BARRICADES AND SIGNS SHALL BE USED ALONG THE CONTRACTOR'S ACCESS ROUTE AS DETAILED ON THE CONSTRUCTION ACTIVITY PLAN SHEETS.

16. HAZARD MARKING AND LIGHTING

1. THE CONTRACTOR SHALL FURNISH, ERECT, AND MAINTAIN MARKINGS AND ASSOCIATED LIGHTING OF OPEN TRENCHES, EXCAVATIONS, TEMPORARY STOCKPILES, AND HIS/HER CONSTRUCTION EQUIPMENT.

2. ALL CONSTRUCTION EQUIPMENT SHALL BE FLAGGED AND/OR LIGHTED IN ACCORDANCE WITH FAA ADVISORY CIRCULAR 150/5370-2G AND 150/5210-5D OR LATEST EDITION AT ALL TIMES WHILE OPERATING ON AIRPORT PROPERTY. THE MAXIMUM EQUIPMENT HEIGHT IS 25'.

3. BARRICADES SHALL BE PLACED AT THE LOCATIONS SHOWN ON THE CONSTRUCTION ACTIVITY PLAN SHEET OR AS DIRECTED BY THE ENGINEER.

4. THE CONTRACTOR SHALL INSPECT THE BARRICADES ONCE DURING EACH WORK DAY TO INSURE PROPER PLACEMENT AND PROPER OPERATION OF THE RED LIGHTS AND FLAG PLACEMENT.

IL. CONTRACT: **DK063**
IL. LETTING ITEM: **01A**
IL. PROJECT: **DKB-4924**
S.B.G. PROJECT: **3-17-SBGP-184**

SURVEY BOOK # ----

REVISIONS		
NUMBER	BY	DATE

0 1 2
THIS BAR IS EQUAL TO 2" AT FULL SCALE (34X22).

DEKALB TAYLOR MUNICIPAL AIRPORT
DEKALB, ILLINOIS
REMOVE AND REPLACE A PORTION OF THE AIRCRAFT PARKING APRON

CONSTRUCTION SAFETY PHASING NOTES - 1

©Copyright CMT, Inc.

CMT
CRAWFORD, MURPHY & TILLY, INC.
CONSULTING ENGINEERS
License No. 184-000613

DTMA
DEKALB TAYLOR MUNICIPAL AIRPORT

DESIGN BY:	CMT-RFD
DRAWN BY:	CMT-RFD
CHECKED BY:	CMT-RFD
APPROVED BY:	DJK
DATE:	3/3/2023
JOB No:	210248-02

FINAL

SHEET 5 OF 18 SHEETS

XREF DWG: Dekalb 2022 Title Block.dwg
IMAGE FILES: DTMA Logo-black.jpg
UPDATE BY: Robert Heinz
LAYOUT: !!NEW SHEET TEMPLATE!!
DATE: Friday, March 3, 2023 1:35:18 PM
FILE: K:\DekalbAp\21024802-00_RehabTermApron\Draw\Sheets\21024802 - Sequence Notes - 1.dwg

17. WORK ZONE LIGHTING FOR NIGHTTIME CONSTRUCTION

1. WORK PERFORMED BY THE CONTRACTOR OUTSIDE OF DAYLIGHT HOURS SHALL BE DONE UNDER SUFFICIENT ARTIFICIAL AREA LIGHTING TO ALLOW FOR PROPER CONSTRUCTION METHODS AND INSPECTION.

2. LIGHTS SHALL CONSIST OF VEHICLE OR MOVABLE POLE MOUNTED FLOODLIGHTS AND/OR SPOTLIGHTS OF SUFFICIENT NUMBER TO ILLUMINATE THE WORK AREA. VEHICLE HEADLIGHTS WILL BE ALLOWED ONLY IN ADDITION TO OTHER LIGHTS MENTIONED ABOVE. LIGHTING SHALL NOT INTERFERE WITH AIR OPERATIONS. ANY WORK BEING PERFORMED UNDER INSUFFICIENT ARTIFICIAL LIGHTING, IN THE RESIDENT ENGINEER'S JUDGEMENT, SHALL BE STOPPED UNTIL SUCH TIME AS ADDITIONAL LIGHTING IS PROVIDED. ALL WORK PERFORMED DURING THAT TIME WILL NOT BE ACCEPTABLE UNTIL PROPER INSPECTION AND TESTING CAN BE MADE.

18. PROTECTION

1. ALL WORK REQUIRED INSIDE OF THE RUNWAY SAFETY AREA WILL REQUIRE THE RUNWAY TO BE CLOSED.

2. ALL WORK REQUIRED ON AN ACTIVE TAXIWAY OR INSIDE OF AN ACTIVE TAXIWAY OBJECT FREE AREA, WILL REQUIRE THE TAXIWAY TO BE CLOSED.

19. OTHER LIMITATIONS ON CONSTRUCTION

1. IF, DURING CONSTRUCTION, AN EMERGENCY IS DECLARED BY THE AIRPORT, THE CONTRACTOR SHALL IMMEDIATELY CLEAR THE PAVEMENT OF ALL VEHICLES, PERSONNEL AND EQUIPMENT.

2. BROKEN CONCRETE, BROKEN ASPHALT, RUBBISH FROM DEMO, AND OTHER MISCELLANEOUS DEBRIS SHALL BE DISPOSED OF OFF AIRPORT PROPERTY, UNLESS OTHERWISE SPECIFIED.

3. THE CONTRACTOR WILL BE RESPONSIBLE FOR COORDINATING THE AIRSPACE FOR THE CONSTRUCTION EQUIPMENT THAT IS TALLER THAN THAT SPECIFIED ON THE PLANS WITH THE FAA. THIS PROCESS MAY TAKE UP TO 12 WEEKS TO COMPLETE.

4. THE CONTRACTOR SHALL BE RESPONSIBLE FOR MEGGAR TESTING ALL EXISTING CIRCUITS PRIOR TO CONSTRUCTION AND FOLLOWING CONSTRUCTION AS SPECIFIED IN THE CONTRACT DOCUMENTS.

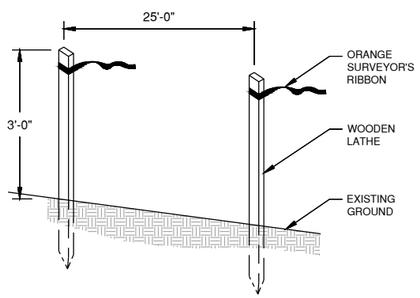

CONSTRUCTION SETBACK LINE DETAIL

NOT TO SCALE

CONSTRUCTION SETBACK NOTES

1. CONTRACTOR SHALL MARKER THE RUNWAY SAFETY AREA AND TAXIWAY OBJECT FREE AREA AT THE LIMITS OF PROPOSED IMPROVEMENTS PER THE CONSTRUCTION SETBACK DETAIL AS DIRECTED BY THE RESIDENT ENGINEER.

2. ALL COST ASSOCIATED WITH THE CONSTRUCTION SETBACK LINE SHALL BE CONSIDERED INCIDENTAL TO THE CONTRACT.

PAYMENT FOR ALL CONSTRUCTION SAFETY MEASURES AND TEMPORARY CONSTRUCTION INCLUDING BUT NOT LIMITED TO TEMPORARY TAXIWAY EDGE LIGHTS AND CABLING, CABLE JUMPERS AND CONNECTIONS, TAXIWAY EDGE SAFETY TREATMENT, COMPACTED MILLINGS WEDGE AND ALL REMOVALS OF TEMPORARY MEASURES AND CONSTRUCTION SHALL BE CONSIDERED INCIDENTAL TO THE CONTRACT.

(ORANGE / WHITE)

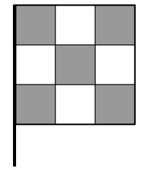

CONSTRUCTION EQUIPMENT AND VEHICLE SIGNAL FLAG

N.T.S.

SIGNAL FLAG NOTES

1. ALL CONTRACTOR VEHICLES AND EQUIPMENT SHALL DISPLAY COMPANY LOGO PLACARDS AND FLAG.

2. WHEN WORKING PRIOR TO DAWN OR AFTER DUSK, A 360 DEGREE ROTATING AMBER BEACON IS REQUIRED ON ALL EQUIPMENT AND TRUCKS.

3. CONTRACTOR SHALL REPLACE FLAGS THAT ARE WORN AND INEFFECTIVE.

AIRFIELD LIGHTS AND SIGNS NOTES

1. CONTRACTOR SHALL COVER ALL AIRFIELD SIGNS AND TAXIWAY LIGHTS ON CLOSED TAXIWAYS UNTIL THE TAXIWAY IS RE-OPENED FOR AIRCRAFT USE. THE METHOD AND MATERIALS USED TO COVER THE SIGNS AND LIGHTS SHALL MEET THE ENGINEER'S AND AIRPORT'S APPROVAL. COST INCIDENTAL TO THE CONTRACT. REMOVING LAMPS FROM ENERGIZED FIXTURES AS A MEANS TO REMOVE THE LIGHTS OR FIXTURES FROM SERVICE SHALL NOT BE ACCEPTABLE.

CONTRACTOR SHALL PLAN AND PERFORM HIS WORK SO AS NOT TO INTERFERE OR HINDER THE PROGRESS, WORK OR HAUL ROAD ACCESS OF OTHER CONTRACTORS (SEE SPECIAL PROVISIONS SECTION 50-05). THE PRIME CONTRACTOR WILL BE RESPONSIBLE TO COORDINATE CONSTRUCTION ACTIVITIES AND ACCESS BETWEEN ALL ON-SITE CONTRACTORS SUBCONTRACTORS. IT IS ANTICIPATED THE FOLLOWING PROJECTS MAY BE UNDER CONSTRUCTION CONCURRENTLY BUT NOT WITHIN LIMITS OF THIS PROJECT:

- REHABILITATE RUNWAY 9/27

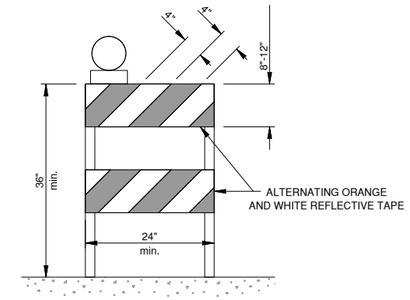

IDOT TYPE II BARRICADE

NOT TO SCALE

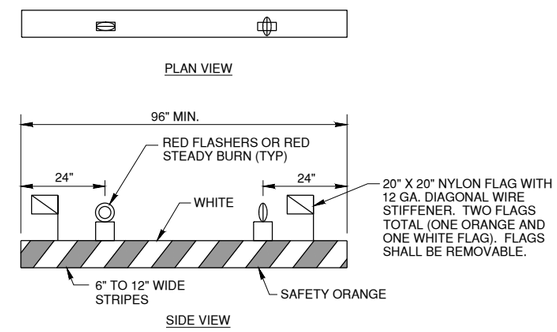

AIRSIDE LOW PROFILE LIGHTED BARRICADE

NOT TO SCALE

BARRICADE NOTES

1. FLASHER OR STEADY BURN LIGHTS SHALL BE BATTERY OPERATED. LENS SHALL BE RED AND BE ABLE TO ROTATE 90°.

2. FACING OF BARRICADE SHALL BE COVERED WITH REFLECTIVE TAPE OR PAINT.

3. BARRICADES TO BE PLACED WITH A MAXIMUM OF 4' SPACING END TO END UP TO THE EDGE OF PAVEMENT ALONG OPERATIONAL PAVEMENT ADJACENT TO CONSTRUCTION AS DIRECTED BY THE RESIDENT ENGINEER. ALTERNATE FLASHER OR STEADY BURN LENSES SO THAT EVERY OTHER LENS IS ROTATED 90°.

4. FLASHER OR STEADY BURN LIGHTS SHALL BE SECURED TO THE BARRICADES, AS APPROVED BY THE RESIDENT ENGINEER.

5. BARRICADES SHALL BE OF LOW MASS, EASILY COLLAPSIBLE UPON CONTACT WITH AN AIRCRAFT OR ANY OF IT COMPONENTS, AND WEIGHTED TO AVOID BEING BLOWN OVER.

6. BARRICADES SHALL BE OF A COMMERCIAL DESIGN AND SHALL MEET CURRENT FAA REQUIREMENTS.

7. PLACE ALL BARRICADES OUTSIDE RUNWAY SAFETY AREAS AND OUTSIDE TAXIWAY OBJECT FREE AREAS.

8. ALL COST ASSOCIATED WITH THE LOW PROFILE BARRICADES SHALL BE CONSIDERED INCIDENTAL TO THE CONTRACT.

IL. CONTRACT: **DK063**
IL. LETTING ITEM: **01A**
IL. PROJECT: **DKB-4924**
S.B.G. PROJECT: **3-17-SBGP-184**

SURVEY BOOK # ----

REVISIONS		
NUMBER	BY	DATE

0 1 2
THIS BAR IS EQUAL TO 2" AT FULL SCALE (34X22).

DEKALB TAYLOR MUNICIPAL AIRPORT
DEKALB, ILLINOIS
REMOVE AND REPLACE A PORTION OF THE AIRCRAFT PARKING APRON

CONSTRUCTION SAFETY PHASING NOTES - 2

©Copyright CMT, Inc.
CMT
CRAWFORD, MURPHY & TILLY, INC.
CONSULTING ENGINEERS
License No. 184-000613

DEKALB TAYLOR MUNICIPAL AIRPORT

DESIGN BY:	CMT-RFD
DRAWN BY:	CMT-RFD
CHECKED BY:	CMT-RFD
APPROVED BY:	DJK
DATE:	3/3/2023
JOB No:	210248-02

FINAL

SHEET 6 OF 18 SHEETS

XREF DWG: Dekalb 2022 Title Block.dwg
IMAGE FILES: DTMA Logo-black.jpg
UPDATE BY: Robert Heinz
LAYOUT: INEW SHEET TEMPLATE!!
DATE: Friday, March 3, 2023 1:35:24 PM
FILE: K:\Dekalb\Ap\210248\02-00_RehabTermApron\Draw\Sheets\210248\02- Sequence Notes - 2.dwg

LEGEND

- ASPHALT PAVEMENT (10" - 12") TO BE REMOVED
- CONCRETE PAVEMENT TO BE REMOVED
- ASPHALT PAVEMENT BUTT JOINT
- EXISTING STAKE MOUNTED MEDIUM INTENSITY TAXIWAY LIGHT
- (4) EXISTING CONCRETE ENCASED DUCT BANK (NUMBER OF WAYS)
- HH EXISTING ELECTRICAL HANDHOLE
- EXISTING WIND CONE
- EXISTING AIRFIELD GUIDANCE SIGN
- S EXISTING SPLICE CAN
- E EXISTING ELECTRICAL MANHOLE
- TXY EXISTING TAXIWAY CIRCUIT
- 09-27 EXISTING RUNWAY 9-27 CIRCUIT
- 02-20 EXISTING TAXIWAY 2-20 CIRCUIT
- PAPI02 EXISTING RUNWAY 2 PAPI CIRCUIT
- PAPI20 EXISTING RUNWAY 20 PAPI CIRCUIT
- REIL20 EXISTING RUNWAY 20 REIL CIRCUIT
- REIL27 EXISTING RUNWAY 27 REIL CIRCUIT
- PLASI27 EXISTING RUNWAY 27 PLASI CIRCUIT
- WIND EXISTING WINDCONE CIRCUIT
- SAN EXISTING SANITARY MANHOLE
- SS EXISTING SANITARY SEWER
- EXISTING DRAINAGE STRUCTURE
- ST EXISTING STORM SEWER
- G EXISTING GAS
- W EXISTING WATERMAIN
- UD EXISTING UNDERDRAIN
- CO EXISTING UNDERDRAIN CLEANOUT
- R X EXISTING ITEM TO BE REMOVED

TIE-DOWN REMOVAL NOTES

1. THE VOID LEFT BY THE REMOVAL SHALL BE BACKFILLED TO BOTTOM OF PAVEMENT STRUCTURE WITH ITEM 153 CLSM. THE FINAL PAVEMENT STRUCTURE SHALL BE FILLED WITH BITUMINOUS SURFACE COURSE TO MATCH THE EXISTING SURFACE.
2. THE COST OF ALL WORK AND MATERIALS TO SAWCUT, ASPHALT PAVEMENT REMOVAL AND REPLACEMENT AND CLSM FILL SHALL BE CONSIDERED INCIDENTAL TO THE MOORING TIE DOWN REMOVAL.

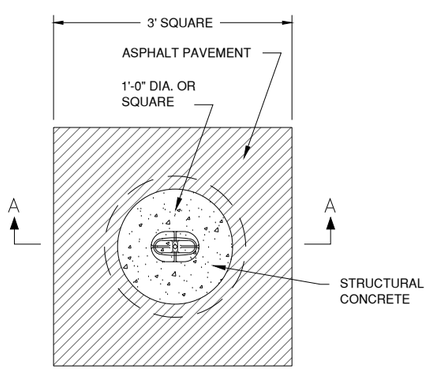

PLAN

TIE-DOWN REMOVAL -TYPE A DETAIL

N.T.S.

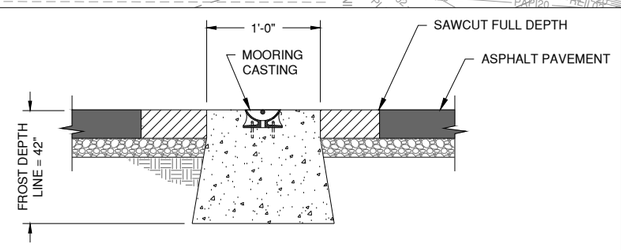

SECTION A-A

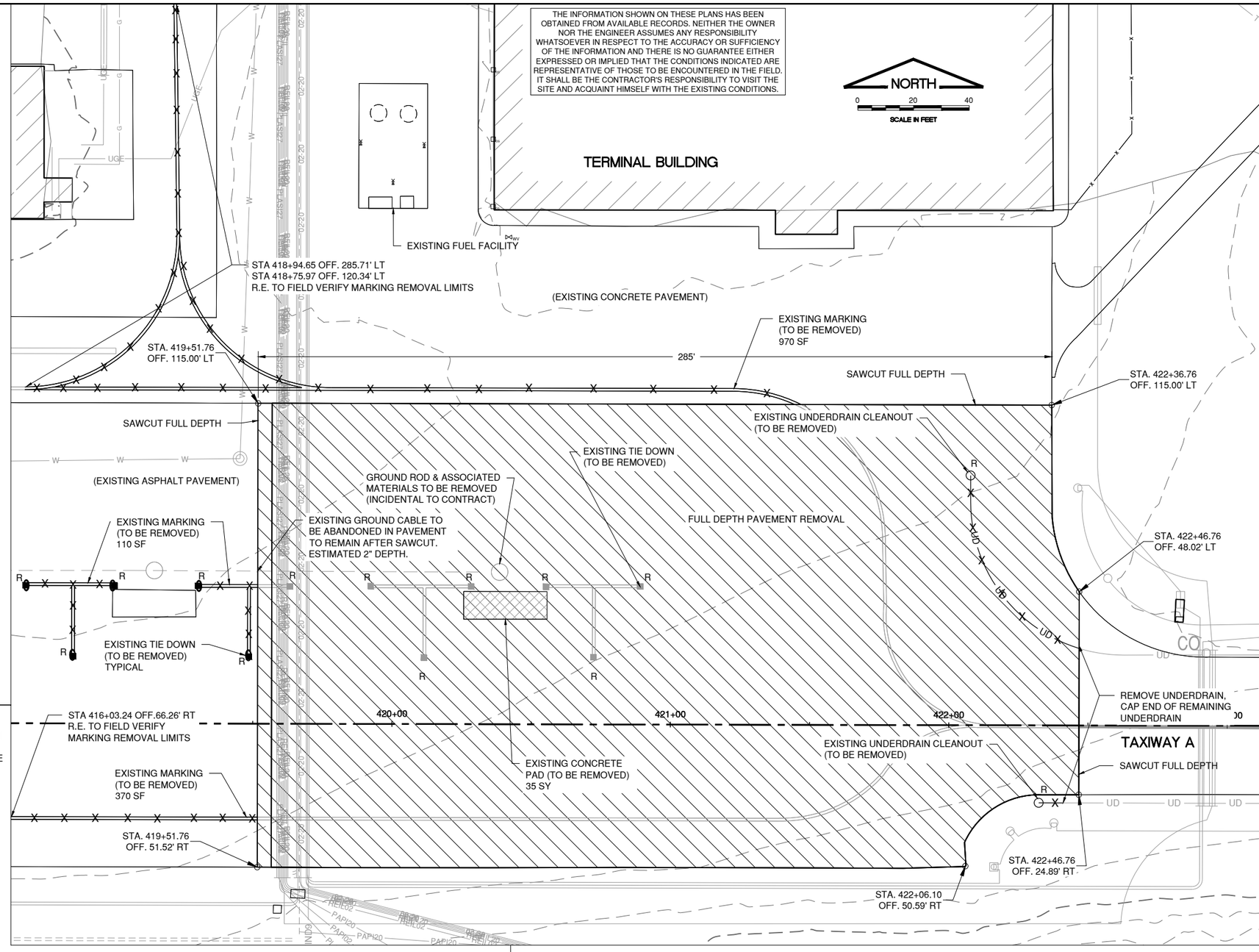

NOTES

1. THE EXISTING PAVEMENT TO BE REMOVED SHALL BE SAWED FULL DEPTH ALONG THE EDGE OF THE REMOVAL LIMITS. COST OF SAWCUTTING AND DISPOSAL OF PAVEMENT SHALL BE CONSIDERED INCIDENTAL TO THE CORRESPONDING REMOVE PAVEMENT PAY ITEM. RESIDENT ENGINEER SHALL VERIFY ACTUAL REMOVAL LIMITS AFTER INITIAL LAYOUT PRIOR TO SAWCUTTING.
2. EXISTING CONCRETE APRON EDGE SHALL BE INSPECTED AND SPALLS REPAIRED. THE VERTICAL FACE SHALL HAVE A CLEAN VERTICAL EDGE PRIOR TO PLACING EXPANSION MATERIAL. ANY MALFORMATIONS SHALL BE CHIPPED AWAY TO CREATE A CLEAN VERTICAL FACE AT NO EXTRA COST TO THE CONTRACT.
3. EXCESS EXCAVATED MATERIAL SHALL BE HAULED OFFSITE AND DISPOSED OF PROPERLY BY THE CONTRACTOR.
4. MARKING REMOVAL LIMITS SHALL BE VERIFIED WITH RESIDENT ENGINEER PRIOR TO REMOVAL. A FOG SEAL SHALL BE APPLIED AFTER REMOVAL TO AS LAID OUT IN SPECIFICATIONS TO REMOVE "GHOST LINES".

IL. CONTRACT: **DK063**
IL. LETTING ITEM: **01A**
IL. PROJECT: **DKB-4924**
S.B.G. PROJECT: **3-17-SBGP-184**

SURVEY BOOK # ----

REVISIONS

NUMBER	BY	DATE

0 1 2
THIS BAR IS EQUAL TO 2" AT FULL SCALE (34X22).

DEKALB TAYLOR MUNICIPAL AIRPORT
DEKALB, ILLINOIS
REMOVE AND REPLACE A PORTION OF THE AIRCRAFT PARKING APRON

EXISTING CONDITIONS AND PROPOSED REMOVALS

©Copyright CMT, Inc.

CMT
CRAWFORD, MURPHY & TILLY, INC.
CONSULTING ENGINEERS
License No. 184-000613

DEKALB TAYLOR MUNICIPAL AIRPORT

DESIGN BY:	CMT-RFD
DRAWN BY:	CMT-RFD
CHECKED BY:	CMT-RFD
APPROVED BY:	DJK
DATE:	3/3/2023
JOB No:	210248-02

FINAL

SHEET 7 OF 18 SHEETS

XREF DWG: Dekalb 2022 Title Block.dwg
21024802 - dekalb base.dwg
21024802 - dekalb utility base.dwg
21024802 - dekalb alignments.dwg
210248020 - dekalb - rehab term apron topo 12-1-21.dwg
IMAGE FILES: DTMA Logo-black.jpg
UPDATE BY: Robert Heinz
LAYOUT: Layout 1
DATE: Friday, March 3, 2023 1:35:46 PM
FILE: K:\DekalbAp\210248202-00_RehabTermApron\Draw\Sheets\21024802 - Existing Conditions.dwg

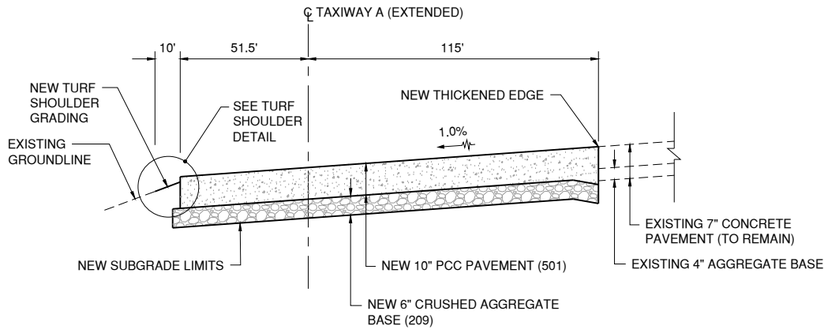

NEW TERMINAL APRON (SECTION A-A)

NOT TO SCALE

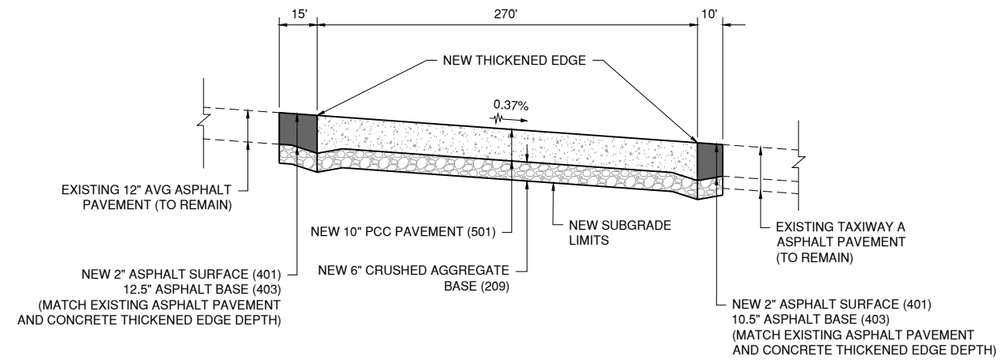

NEW TERMINAL APRON (SECTION B-B)

NOT TO SCALE

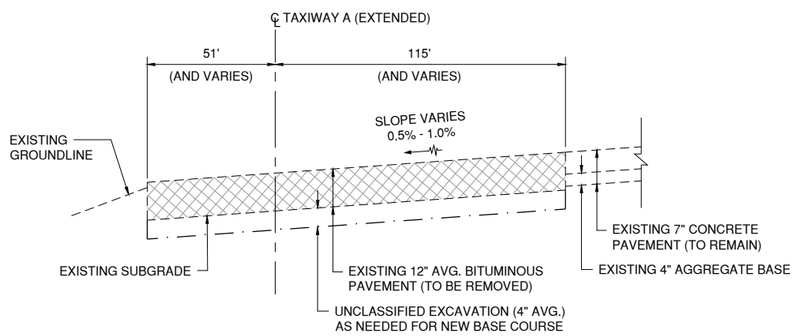

EXISTING TERMINAL APRON DEMOLITION (SECTION A-A)

NOT TO SCALE

TURF SHOULDER NOTES:

1. TILL AND PULVERIZE EXISTING TURF SHOULDER IN PLACE (COST INCIDENTAL TO SEEDING PAY ITEM).
2. LIMITS OF TURF SHOULDER SHALL BE ADJUSTED IN THE FIELD BY THE RESIDENT ENGINEER AS REQUIRED.
3. TURF SHALL BE SMOOTHLY GRADED TO THE SATISFACTION OF THE RESIDENT ENGINEER BEFORE SEEDING. ADDITIONAL TOPSOIL WILL BE REQUIRED FOR TURF SHOULDER RESTORATION AND SHALL BE INCIDENTAL TO SHOULDER ADJUSTMENT PAY ITEM.

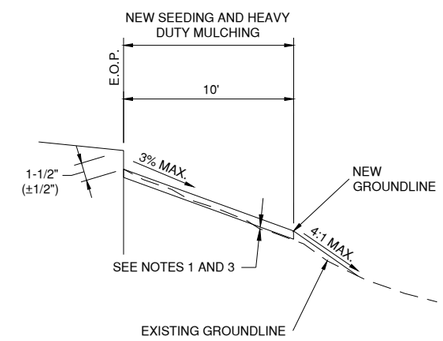

TURF SHOULDER DETAIL

NOT TO SCALE

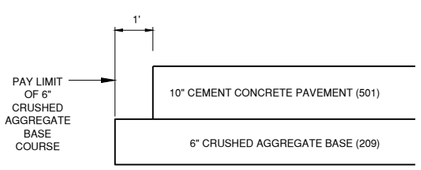

APRON EDGE DETAIL (TYPICAL)

N.T.S.

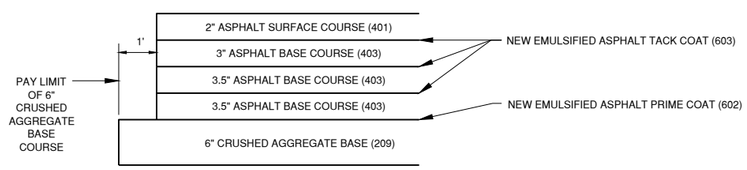

ASPHALT PAVEMENT EDGE DETAIL (TYPICAL)

N.T.S.

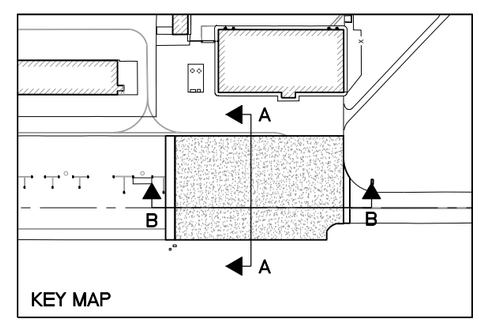

IL. CONTRACT: **DK063**
IL. LETTING ITEM: **01A**
IL. PROJECT: **DKB-4924**
S.B.G. PROJECT: **3-17-SBGP-184**

SURVEY BOOK # ----

REVISIONS

NUMBER	BY	DATE

0 1 2
THIS BAR IS EQUAL TO 2" AT FULL SCALE (34X22).

DEKALB TAYLOR MUNICIPAL AIRPORT
DEKALB, ILLINOIS
REMOVE AND REPLACE A PORTION OF THE AIRCRAFT PARKING APRON

TYPICAL SECTIONS

©Copyright CMT, Inc.
CMT
CRAWFORD, MURPHY & TILLY, INC.
CONSULTING ENGINEERS
License No. 184-000613

DEKALB TAYLOR MUNICIPAL AIRPORT

DESIGN BY:	CMT-RFD
DRAWN BY:	CMT-RFD
CHECKED BY:	CMT-RFD
APPROVED BY:	DJK
DATE:	3/3/2023
JOB No:	210248-02

FINAL

SHEET 8 OF 18 SHEETS

XREF DWG: Dekalb 2022 Title Block.dwg
21024802 - dekalb base.dwg
21024802 - dekalb alignments.dwg
IMAGE FILES: DTMA Logo-black.jpg
UPDATE BY: Robert Heinz
LAYOUT: INEW SHEET TEMPLATE
DATE: Friday, March 3, 2023 1:35:59 PM
FILE: K:\Dekalb\Ag\210248\02-00_Rehab\TermApron\Draw\Sheets\21024802 - Typical Sections.dwg

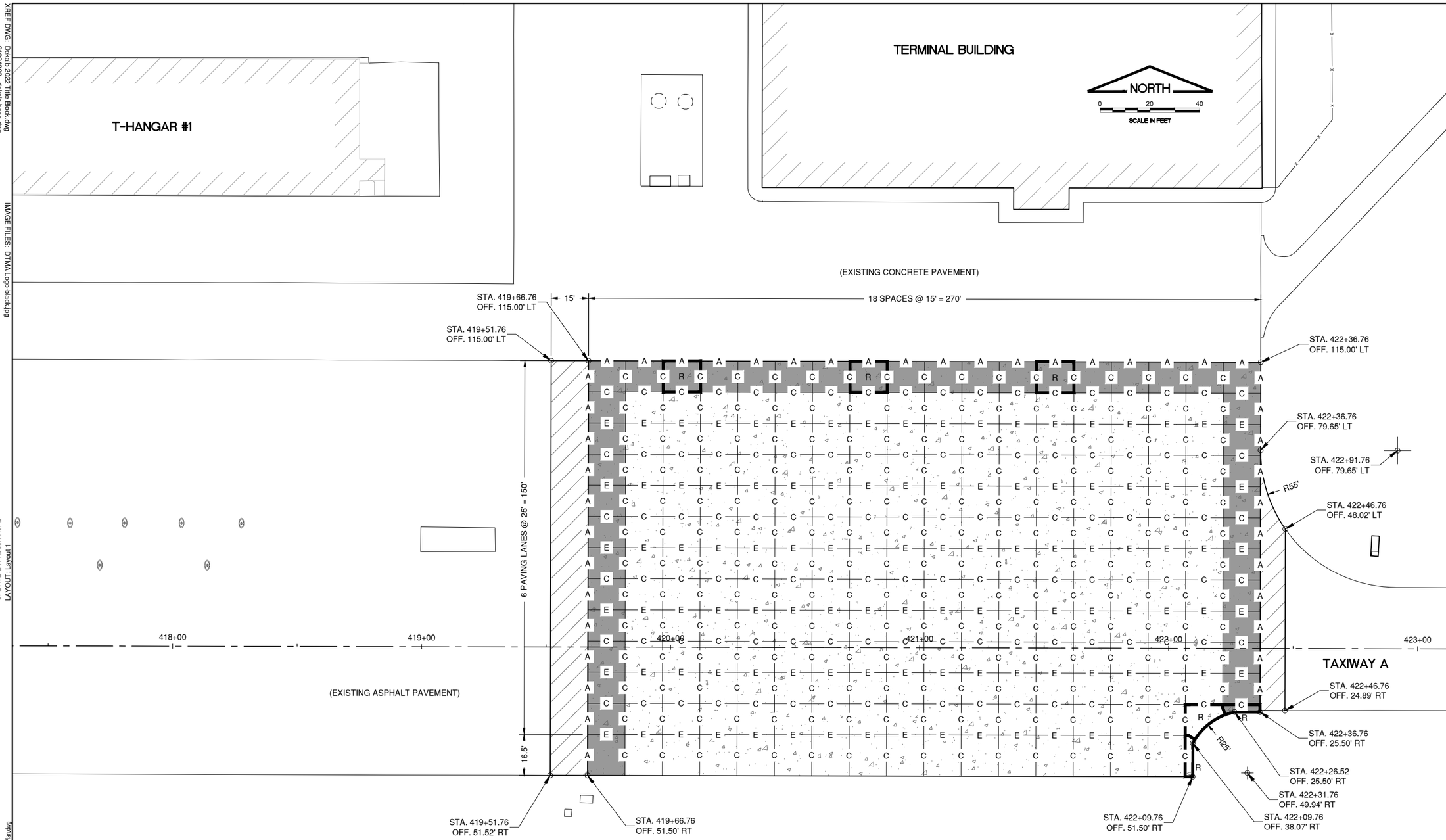

NOTES

1. ALL PANELS WITH STRUCTURES SHALL BE REINFORCED. COST INCIDENTAL TO 501. SEE REINFORCED PANEL DETAIL ON PAVING DETAIL SHEET-1. CONTRACTOR SHALL CUT OUT A 2.5' DIAMETER OF WELDED WIRE FABRIC IN PANELS CENTERED ON A UNDERDRAIN CLEANOUT.
2. ANY VARIATION TO THIS JOINTING PLAN MUST BE APPROVED BY THE RESIDENT ENGINEER.
3. THE BITUMINOUS/CONCRETE PAVEMENT INTERFACE SHALL BE SEALED AS DETAILED ON THE JOINTING DETAIL SHEET. COST OF JOINTING AND SEALING SHALL BE INCIDENTAL TO THE CONTRACT.

LEGEND

- A — TYPE A THICKENED EDGE JOINT
- C — TYPE C DOWELED CONTRACTION JOINT
- E — TYPE E DOWELED CONSTRUCTION JOINT
- R — NEW REINFORCED PANEL
- NEW THICKENED EDGE
- NEW 10" CONCRETE
- NEW ASPHALT PAVEMENT

IL. CONTRACT: **DK063**
IL. LETTING ITEM: **01A**
IL. PROJECT: **DKB-4924**
S.B.G. PROJECT: **3-17-SBGP-184**

SURVEY BOOK # ----

REVISIONS		
NUMBER	BY	DATE

0 1 2
THIS BAR IS EQUAL TO 2" AT FULL SCALE (34X22).

DEKALB TAYLOR MUNICIPAL AIRPORT
DEKALB, ILLINOIS
REMOVE AND REPLACE A PORTION OF THE AIRCRAFT PARKING APRON

PROPOSED GEOMETRY AND JOINTING PLAN

©Copyright CMT, Inc.

CMT
CRAWFORD, MURPHY & TILLY, INC.
CONSULTING ENGINEERS
License No. 184-000613

DITMA
DEKALB TAYLOR MUNICIPAL AIRPORT

DESIGN BY:	CMT-RFD
DRAWN BY:	CMT-RFD
CHECKED BY:	CMT-RFD
APPROVED BY:	DJK
DATE:	3/3/2023
JOB No:	210248-02

FINAL

SHEET 9 OF 18 SHEETS

XREF DWG: Dekalb 2022 Title Block.dwg
21024802 - dekalb base.dwg
21024802 - dekalb utility base.dwg
21024802 - dekalb alignments.dwg
IMAGE FILES: DTMA Logo-black.jpg
UPDATE BY: Robert Heinz
LAYOUT: Layout 1
DATE: Friday, March 3, 2023 1:36:14 PM
FILE: K:\Dekalb\p210248\02-00_RehabTermApron\Draw\Sheets\21024802- Jointing Plan.dwg

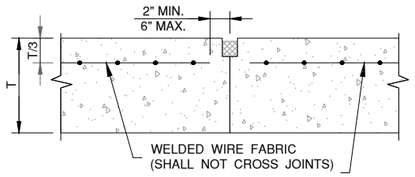

REINFORCED PANEL DETAIL

N.T.S.

NOTE: AMOUNT OF STEEL SHALL BE 0.050% OR GREATER

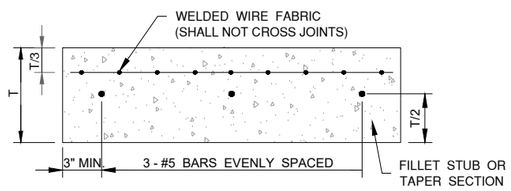

REINFORCED FILLET/TAPER SECTION STEEL DETAIL

N.T.S.

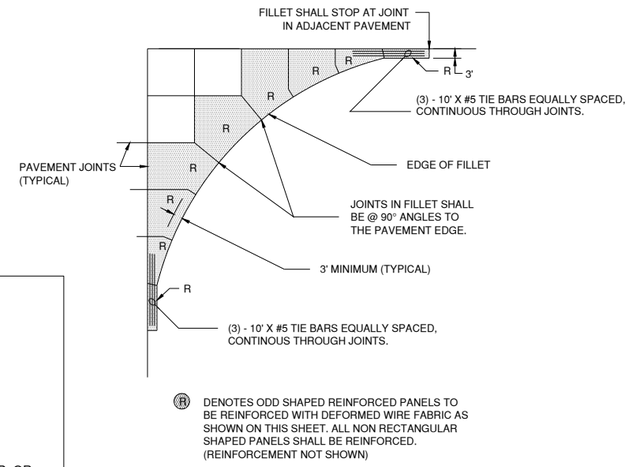

(R) DENOTES ODD SHAPED REINFORCED PANELS TO BE REINFORCED WITH DEFORMED WIRE FABRIC AS SHOWN ON THIS SHEET. ALL NON RECTANGULAR SHAPED PANELS SHALL BE REINFORCED. (REINFORCEMENT NOT SHOWN)

FILLET DETAIL AND FILLET REINFORCING LAYOUT

N.T.S.

WIRE FABRIC NOTES:

1. PANELS TO BE REINFORCED WITH WIRE FABRIC DENOTED AS "R" ON THE JOINTING PLAN DRAWINGS.
2. WIRE FABRIC SHALL BE PLACED AT THE VERTICAL POSITION OF T/3 AS SHOWN.
3. WHEN A STRUCTURE IS LOCATED WITHIN A PANEL, WIRE FABRIC SHALL BE PLACED TO WITHIN 3" OF THE STRUCTURE.
4. MINIMUM WELDED WIRE FABRIC LAP IS 18 INCHES.
5. ALL WELDED WIRE FABRIC SHALL BE GRADE 60.
6. THE AREA OF WELDED WIRE FABRIC SHALL PROVIDE AT LEAST 0.05% OF REINFORCEMENT AREA TO UNIT CONCRETE AREA, ASSUMING GRADE 60 STEEL.

WELDED WIRE FABRIC	
SLAB THICKNESS	SUGGESTED FABRIC SIZE
5" - 8"	6 x 6 - W 4.0 x W 4.0
8" - 16"	6 x 6 - W 5.5 x W 5.5
16" - 18"	6 x 6 - W 5.5 x W 5.5
23" - 24"	6 x 6 - W 7.5 x W 7.5

NOTE:
T = PCC PAVEMENT THICKNESS

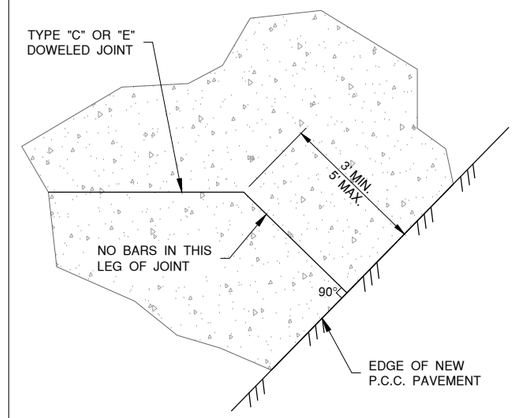

PAVING DETAIL

N.T.S.

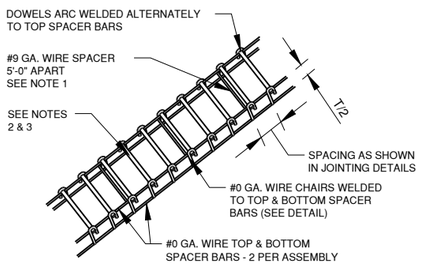

DOWEL BASKET ASSEMBLY DETAIL

N.T.S.

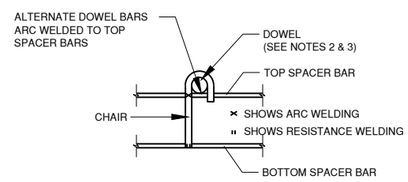

TYPICAL DOWEL BASKET ELEVATION DETAIL SHOWING CHAIR

DOWEL BASKET DETAILS

N.T.S.

DOWEL BASKET NOTES

1. #9 GA. WIRE SPACER BAR ARC WELDED TO THE BOTTOM OF TOP SPACER BAR. (MAY BE MECHANICALLY ATTACHED IN LIEU OF WELDING) 3 REQUIRED PER UNIT.
2. DOWEL BAR DIAMETER, LENGTH & SPACING SHALL BE AS SHOWN IN TABLE 1.
3. DOWELS SHALL BE EPOXY COATED FULL LENGTH OF DOWEL. IMMEDIATELY PRIOR TO PAVING, THE FREE END OF EACH DOWEL SHALL BE LUBRICATED OR OILED, FOR HALF THE LENGTH OF THE DOWEL.
4. T = PCC PAVEMENT THICKNESS

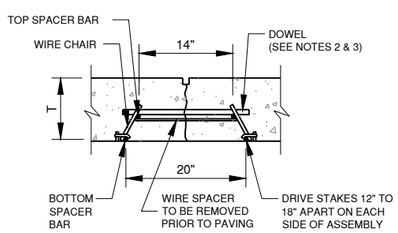

DOWEL BAR INSTALLATION DETAIL

N.T.S.

TABLE 1

PAVEMENT THICKNESS T - INCHES	DOWEL BAR DETAILS			PAVEMENT THICKNESS T - INCHES	TIE BAR DETAILS		
	DIA.	LENGTH	SPACING		BAR SIZE	LENGTH	SPACING
5 - 7	¾ "	18"	12" O.C.	6 OR LESS	#4	20"	36" O.C.
7.5 - 12	1"	18"	12" O.C.	GREATER THAN 6	#5	30"	30" O.C.
12.5 - 16	1 ¼ "	20"	15" O.C.				
16.5 - 20	1 ½ "	20"	18" O.C.				
20.5 - 24	2"	24"	18" O.C.				

NOTE: ALL DOWELS CENTERED ON JOINT UNLESS OTHERWISE NOTED

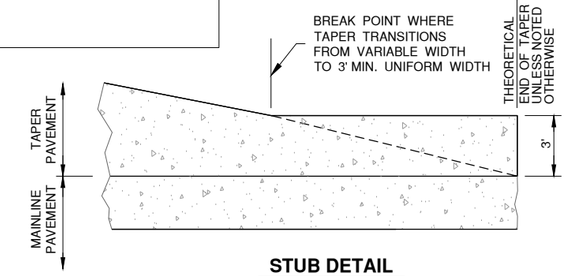

STUB DETAIL

N.T.S.

TYPICAL AT END OF TAPER

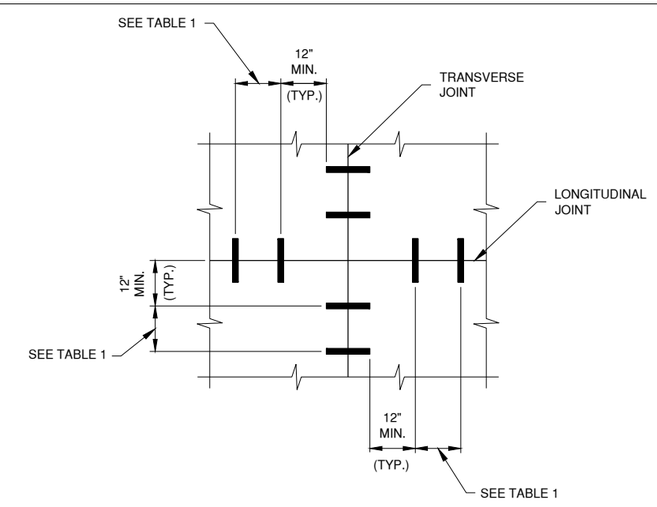

DOWEL PLACEMENT DETAIL

N.T.S.

IL. CONTRACT: **DK063**
IL. LETTING ITEM: **01A**
IL. PROJECT: **DKB-4924**
S.B.G. PROJECT: **3-17-SBGP-184**

SURVEY BOOK # ----

REVISIONS		
NUMBER	BY	DATE

0 1 2
THIS BAR IS EQUAL TO 2" AT FULL SCALE (34X22).

DEKALB TAYLOR MUNICIPAL AIRPORT
DEKALB, ILLINOIS
REMOVE AND REPLACE A PORTION OF THE AIRCRAFT PARKING APRON

PAVING DETAILS - 1

©Copyright CMT, Inc.
CMT
CRAWFORD, MURPHY & TILLY, INC.
CONSULTING ENGINEERS
License No. 184-000613

DITMA
DEKALB TAYLOR MUNICIPAL AIRPORT

DESIGN BY:	CMT-RFD
DRAWN BY:	CMT-RFD
CHECKED BY:	CMT-RFD
APPROVED BY:	DJK
DATE:	3/3/2023
JOB No:	210248-02

FINAL

SHEET 10 OF 18 SHEETS

XREF DWG: Dekalb 2022 Title Block.dwg
IMAGE FILES: DTMA Logo-black.jpg
UPDATE BY: Robert Heinz
LAYOUT: !!NEW SHEET TEMPLATE!!
DATE: Friday, March 3, 2023 1:36:20 PM
FILE: K:\DeKalbApr2102480200_RehabTermApron\Draw\Sheets\210248 02 - Paving Details - 1.dwg

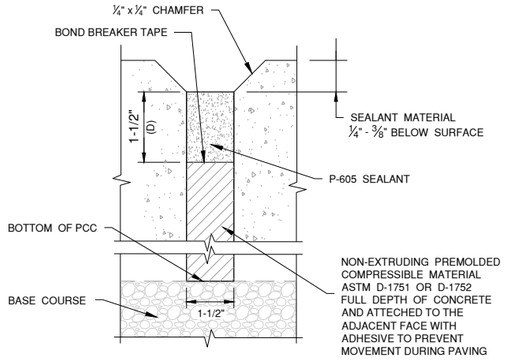

1 **ISOLATION JOINT** 1
N.T.S.

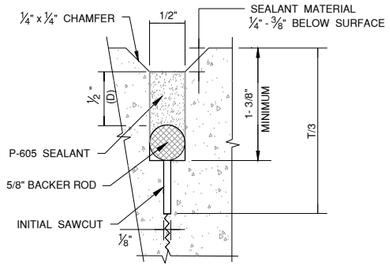

2 **CONTRACTION JOINT** 2
N.T.S.

NOTE:
D = DEPTH
T = PCC PAVEMENT THICKNESS

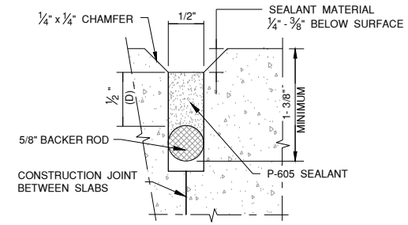

3 **CONSTRUCTION JOINT** 3
N.T.S.

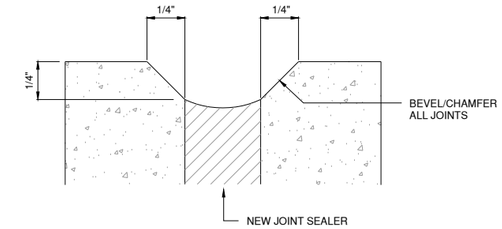

CHAMFER/BEVEL JOINT DETAIL
N.T.S.

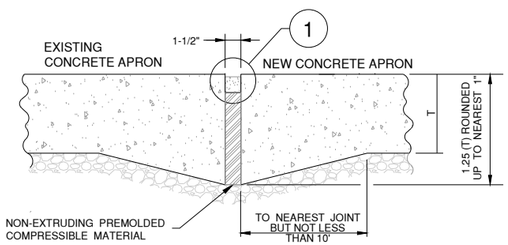

TYPE A - THICKENED EDGE JOINT
CONCRETE - CONCRETE INTERFACE (TYPICAL)
N.T.S.
SYMBOL —— A —— A —— A ——

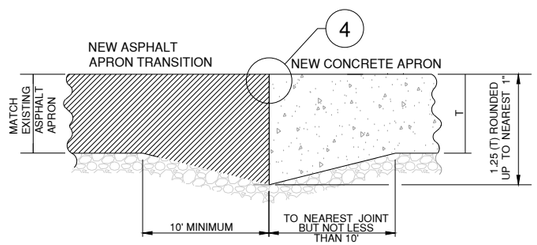

TYPE A - THICKENED EDGE JOINT
ASPHALT - CONCRETE INTERFACE (TYPICAL)
N.T.S.
SYMBOL —— A —— A —— A ——

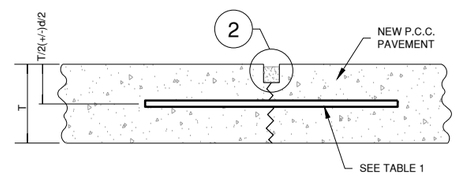

TYPE C - DOWELED CONTRACTION JOINT
N.T.S.
SYMBOL —— C —— C —— C ——

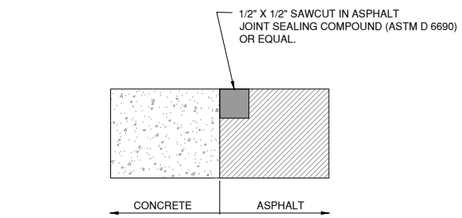

JOINT SEALING AT CONCRETE ASPHALT INTERFACE
4 N.T.S. 4
NOTE: JOINT DIMENSIONS SHALL MEET MANUFACTURER'S RECOMMENDATION

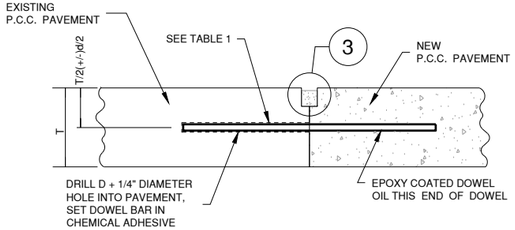

TYPE E - DOWELED CONSTRUCTION JOINT
TO EXISTING PAVEMENT
N.T.S.
SYMBOL —— E —— E —— E ——

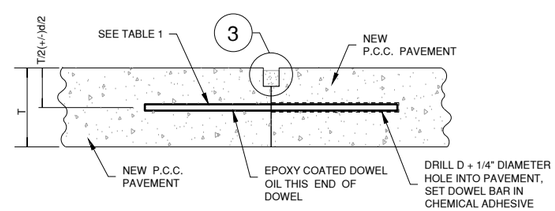

TYPE E - DOWELED CONSTRUCTION JOINT
N.T.S.
SYMBOL —— E —— E —— E ——

NOTE:
D = DEPTH
T = PCC PAVEMENT THICKNESS

JOINT SEALANT NOTES:

1. FACTOR, W/D. FIELD POURED SEALANTS REQUIRE DIFFERENT SEALANT RESERVOIR TO PROVIDE PROPER SHAPE.
2. BACKER ROD AND PREMOLDED COMPRESSIBLE MATERIAL MUST BE COMPATIBLE WITH THE DESIRED SHAPE FACTOR. TYPE OF LIQUID SEALANT USED AND SIZED TO PROVIDE THE DESIRED SHAPE
3. PLACE TOP OF BACKUP MATERIAL AS SHOWN TO CONFORM TO MANUFACTURER'S SHAPE FACTOR, SEALANT DEPTH ("D") IS MEASURED FROM THE HIGHEST SHAPE FACTORS FOR OPTIMUM PERFORMANCE. CONTRACTOR SHALL SUBMIT MFG. RECOMMENDATIONS ON JOINT RESERVOIR WITH SEALANT SUBMITTAL
4. SEALING PROCEDURES SHALL BE IN ACCORDANCE WITH THE MANUFACTURER'S RECOMMENDATIONS.
5. ROUTING AND SEALING OF ALL BITUMINOUS AND PCC PAVEMENTS SHALL BE CONSIDERED INCIDENTAL TO THE PORTLAND CEMENT CONCRETE PAVEMENT PAY ITEM.

TABLE 1

PAVEMENT THICKNESS T - INCHES	DOWEL BAR DETAILS			PAVEMENT THICKNESS T - INCHES	TIE BAR DETAILS		
	DIA.	LENGTH	SPACING		BAR SIZE	LENGTH	SPACING
5 - 7	¾ "	18"	12" O.C.	6 OR LESS	#4	20"	36" O.C.
7.5 - 12	1"	18"	12" O.C.	GREATER THAN 6	#5	30"	30" O.C.
12.5 - 16	1 ¼ "	20"	15" O.C.				
16.5 - 20	1 ½ "	20"	18" O.C.				
20.5 - 24	2"	24"	18" O.C.				

NOTE: ALL DOWELS CENTERED ON JOINT UNLESS OTHERWISE NOTED

JOINTING NOTES

1. ALL EDGES OF NEW SLABS, FREE STANDING OR CLOSURE, SHALL BE EDGED WITH AN APPROVED TOOL HAVING A RADIUS OF 1/8" TO 1/4" TO FACILITATE SAWING OF THE SEALANT RESERVOIR. A RADIUS > 1/4" WILL NOT BE ACCEPTABLE.
2. THE INITIAL SAWCUT FOR ALL LONGITUDINAL AND TRANSVERSE CONTRACTION JOINTS SHALL BE SAWED AS SOON AS POSSIBLE AFTER PLACEMENT OF THE PAVEMENT. SAWING OF LONGITUDINAL CONTRACTION JOINTS ADJACENT TO THE THICKENED EDGES SHALL BE GIVEN PRIORITY OVER OTHER LONGITUDINAL JOINT SAWING.
3. ORANGE CONES SHALL BE PLACED AT 25' CENTERS ALONG THE PAVEMENT EDGE DURING CONCRETE POURING OPERATIONS OF THE CLOSURE LANES TO PREVENT VEHICLES FROM ENTERING PLASTIC CONCRETE. IN THE EVENT A VEHICLE ENTERS THE CONCRETE BEFORE A MINIMUM COMPRESSIVE STRENGTH OF 3,500 PSI HAS BEEN OBTAINED, SAID PAVEMENT SHALL BE REMOVED AND REPLACED AT THE CONTRACTOR'S EXPENSE.
4. ALL DOWEL BARS SHALL BE SECURELY HELD IN PLACE BY MEANS OF A DOWEL BAR ASSEMBLY WHICH WILL ENSURE THAT THEY WILL REMAIN PARALLEL TO THE PAVEMENT LANES. THE DOWEL BAR ASSEMBLIES SHALL BE APPROVED BY THE RESIDENT ENGINEER PRIOR TO INSTALLATION. ALTERNATE METHODS OF PLACEMENT OF DOWEL BARS MAY BE PROPOSED BY THE CONTRACTOR TO BE APPROVED BY THE ENGINEER. TRANSVERSE DOWEL BAR IMPLANTING WILL NOT BE ALLOWED.
5. ALL TIE BARS AND MESH SHALL BE SECURELY HELD IN PLACE BY SUPPORT PINS OR OTHER APPROVED METHODS TO PREVENT SHIFTING DURING AND AFTER CONCRETE PLACEMENT.
6. THE INITIAL SAWCUT SHALL BE MADE TO THE 1/8" WIDTH INDICATED. INITIAL SAWING TO THE DIMENSIONS OF THE SECOND SAWCUT WILL NOT BE ALLOWED.
7. COST OF ALL JOINT SAWING, CLEANING AND SEALING SHALL BE CONSIDERED INCIDENTAL TO THE ASSOCIATED PAY ITEM AND NO SEPARATE PAYMENT SHALL BE MADE.
8. SHOULD THE POURING OPERATION REQUIRE THE INSERTION OF AN INTERMEDIATE HEADER, A DOWEL BASKET ASSEMBLY OR OTHER APPROVED METHOD OF DOWEL BAR PLACEMENT SHALL BE REQUIRED.
9. EPOXY-COATED DOWEL BASKET ASSEMBLIES MEETING IDOT APPROVAL MAY BE PROPOSED BY THE CONTRACTOR TO BE APPROVED BY THE RESIDENT ENGINEER. DOWELS IN THE APPROVED BASKET ASSEMBLIES SHALL CONFORM TO TABLE 1.
10. CONCRETE / BITUMINOUS INTERFACE SHALL BE SEALED PER DETAIL THIS SHEET.
11. CONTRACTOR SHALL CONSTRUCT A 1/4" CHAMFER ON ALL CONCRETE JOINTS AT NO ADDITIONAL COST.
12. JOINTS SHALL BE DRY AND CLEAN BEFORE SEALING OPERATIONS BEGIN..

IL. CONTRACT: **DK063**
IL. LETTING ITEM: **01A**
IL. PROJECT: **DKB-4924**
S.B.G. PROJECT: **3-17-SBGP-184**

SURVEY BOOK # ----

REVISIONS

NUMBER	BY	DATE

0 1 2
THIS BAR IS EQUAL TO 2" AT FULL SCALE (34X22).

DEKALB TAYLOR MUNICIPAL AIRPORT
DEKALB, ILLINOIS
REMOVE AND REPLACE A PORTION OF THE AIRCRAFT PARKING APRON

PAVING DETAILS - 2

©Copyright CMT, Inc.
CMT
CRAWFORD, MURPHY & TILLY, INC.
CONSULTING ENGINEERS
License No. 184-000613

DEKALB TAYLOR MUNICIPAL AIRPORT

DESIGN BY:	CMT-RFD
DRAWN BY:	CMT-RFD
CHECKED BY:	CMT-RFD
APPROVED BY:	DJK
DATE:	3/3/2023
JOB No:	210248-02

FINAL

SHEET 11 OF 18 SHEETS

XREF DWG: Dekalb 2022 Title Block.dwg
IMAGE FILES: DTMA Logo-black.jpg
UPDATE BY: Robert Heinz
LAYOUT: !NEW SHEET TEMPLATE!!
DATE: Friday, March 3, 2023 1:36:28 PM
FILE: K:\Dekalb\ap\210248002-00_RehabTermApron\Draw\Sheets\210248002 - Paving Details - 2.dwg

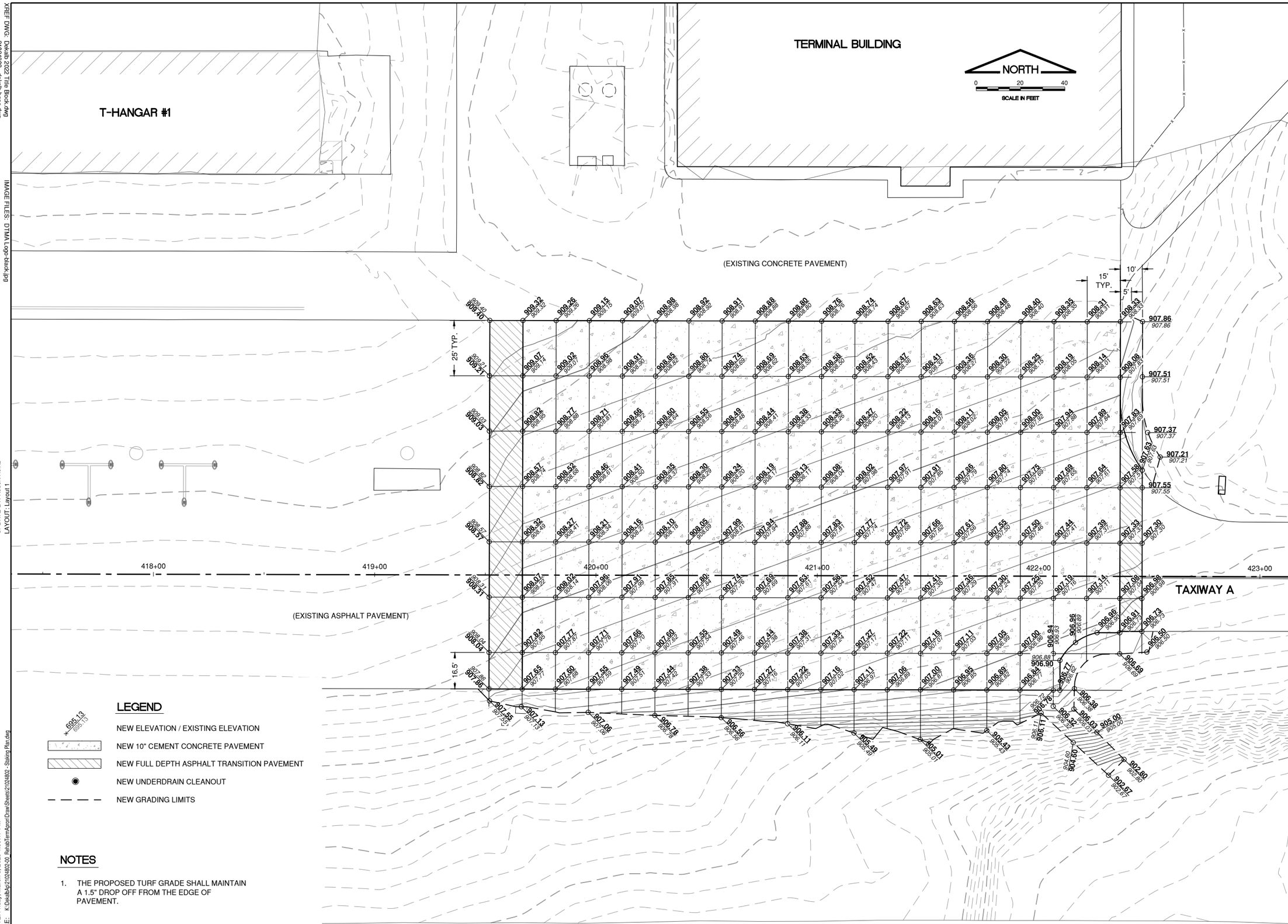

LEGEND

- NEW ELEVATION / EXISTING ELEVATION
- NEW 10" CEMENT CONCRETE PAVEMENT
- NEW FULL DEPTH ASPHALT TRANSITION PAVEMENT
- NEW UNDERDRAIN CLEANOUT
- NEW GRADING LIMITS

NOTES

1. THE PROPOSED TURF GRADE SHALL MAINTAIN A 1.5" DROP OFF FROM THE EDGE OF PAVEMENT.

IL. CONTRACT: **DK063**
IL. LETTING ITEM: **01A**
IL. PROJECT: **DKB-4924**
S.B.G. PROJECT: **3-17-SBGP-184**

SURVEY BOOK # ----

REVISIONS		
NUMBER	BY	DATE

0 1 2
THIS BAR IS EQUAL TO 2" AT FULL SCALE (34X22).

DEKALB TAYLOR MUNICIPAL AIRPORT
DEKALB, ILLINOIS
REMOVE AND REPLACE A PORTION OF THE AIRCRAFT PARKING APRON

STAKING PLAN

©Copyright CMT, Inc.

CMT
CRAWFORD, MURPHY & TILLY, INC.
CONSULTING ENGINEERS
License No. 184-000613

DTMA
DEKALB TAYLOR MUNICIPAL AIRPORT

DESIGN BY:	CMT-RFD
DRAWN BY:	CMT-RFD
CHECKED BY:	CMT-RFD
APPROVED BY:	DJK
DATE:	3/3/2023
JOB No:	210248-02

FINAL

SHEET 12 OF 18 SHEETS

XREF DWG: Dekalb 2022 Title Block.dwg
21024802 - dekalb base.dwg
21024802 - dekalb utility base.dwg
21024802 - dekalb alignments.dwg
IMAGE FILES: DTMA Logo-black.jpg
UPDATE BY: Robert Heinz
LAYOUT: Layout 1
DATE: Friday, March 3, 2023 1:36:47 PM
FILE: K:\Dekalb\ap\210248\02-00_RehabTermApron\Draw\Sheets\210248\02 - Staking Plan.dwg

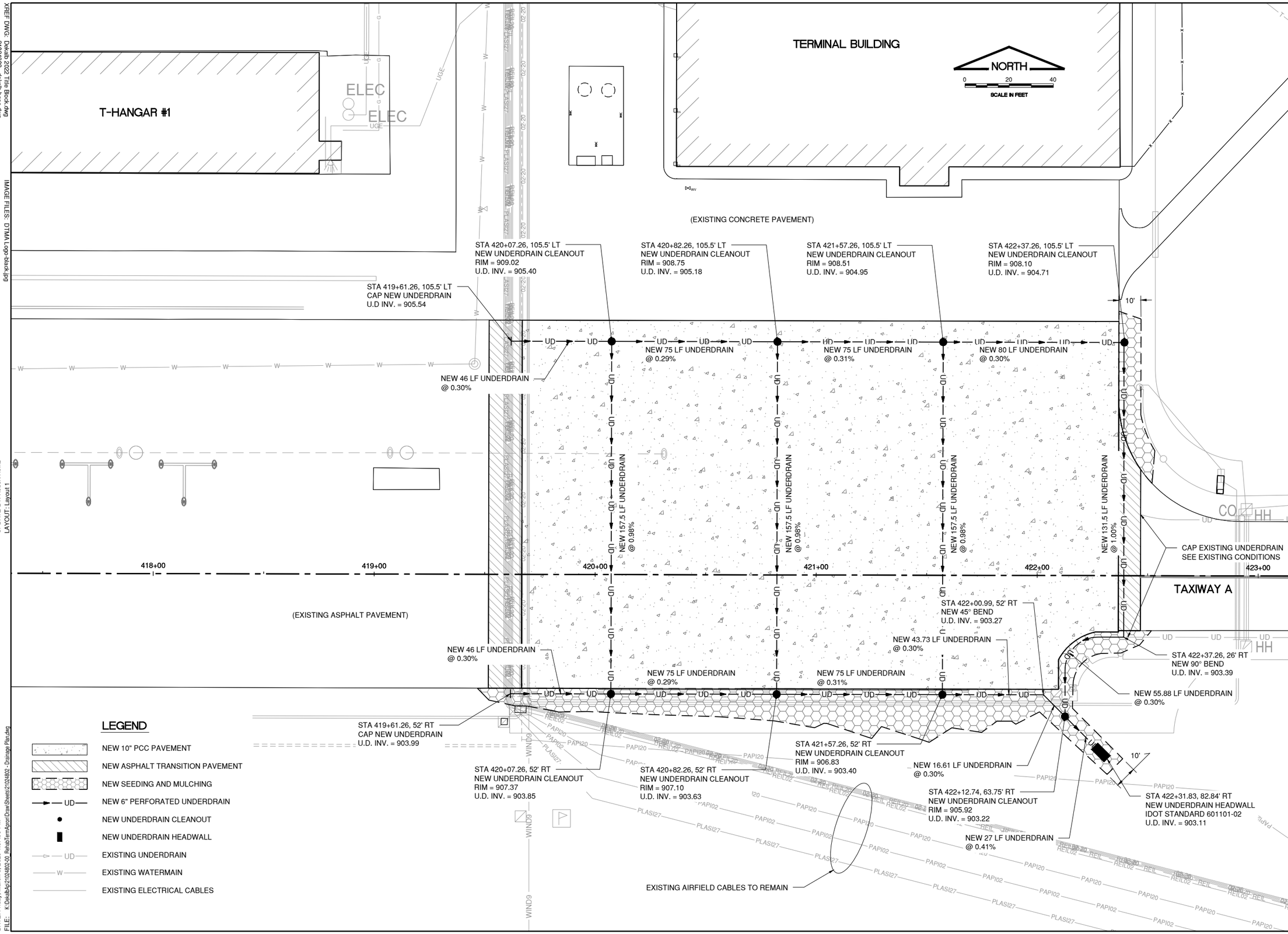

IL. CONTRACT: **DK063**
IL. LETTING ITEM: **01A**
IL. PROJECT: **DKB-4924**
S.B.G. PROJECT: **3-17-SBGP-184**

SURVEY BOOK # ----

REVISIONS		
NUMBER	BY	DATE

0 1 2
THIS BAR IS EQUAL TO 2" AT FULL SCALE (34X22).

DEKALB TAYLOR MUNICIPAL AIRPORT
DEKALB, ILLINOIS
REMOVE AND REPLACE A PORTION OF THE AIRCRAFT PARKING APRON

DRAINAGE AND LANDSCAPING PLAN

©Copyright CMT, Inc.

CMT
CRAWFORD, MURPHY & TILLY, INC.
CONSULTING ENGINEERS
License No. 184-000613

DeKalb Taylor Municipal Airport

DESIGN BY:	CMT-RFD
DRAWN BY:	CMT-RFD
CHECKED BY:	CMT-RFD
APPROVED BY:	DJK
DATE:	3/3/2023
JOB No:	210248-02

FINAL

SHEET 13 OF 18 SHEETS

XREF DWG: Dekalb 2022 Title Block.dwg
21024802 - dekalb base.dwg
21024802 - dekalb utility base.dwg
21024802 - dekalb alignments.dwg
IMAGE FILES: DTMA Logo-black.jpg
UPDATE BY: Robert Heinz
LAYOUT: Layout 1
DATE: Friday, March 3, 2023 1:37:09 PM
FILE: K:\DekalbAp\210248202-00_RehabTermApron\Draw\Sheets\21024802 - Drainage Plan.dwg

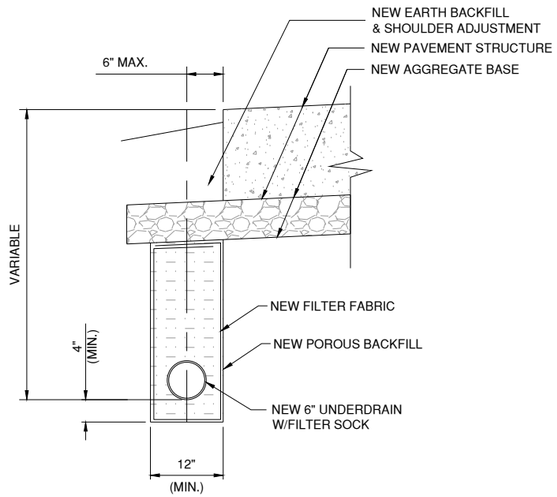

TYPICAL UNDERDRAIN DETAIL
PAVEMENT EDGE
N.T.S.

UNDERDRAIN CLEANOUT NOTES

1. CLEANOUTS IN NEW PAVEMENT SHALL BE CAST IN PLACE AT THE TIME OF PAVING.

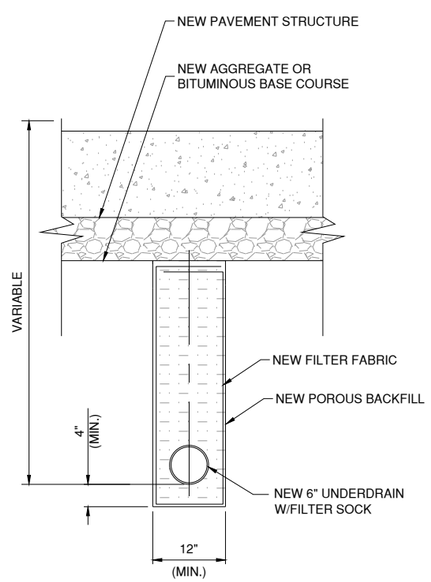

TYPICAL UNDERDRAIN DETAIL
BELOW PAVEMENT
N.T.S.

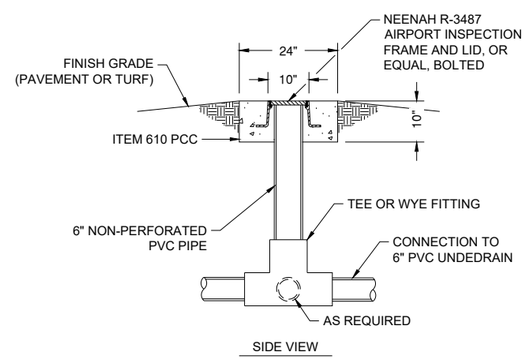

UNDERDRAIN CLEAN-OUT DETAIL
NOT TO SCALE

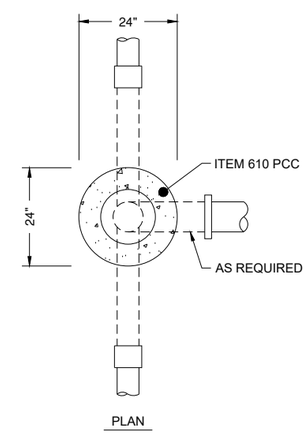

UNDERDRAIN
CLEAN-OUT DETAILS
NOT TO SCALE

IL. CONTRACT: **DK063**
IL. LETTING ITEM: **01A**
IL. PROJECT: **DKB-4924**
S.B.G. PROJECT: **3-17-SBGP-184**

SURVEY BOOK # ----

REVISIONS

NUMBER	BY	DATE

0 1 2
THIS BAR IS EQUAL TO 2" AT FULL SCALE (34X22).

DEKALB TAYLOR MUNICIPAL AIRPORT
DEKALB, ILLINOIS
REMOVE AND REPLACE A PORTION OF THE AIRCRAFT PARKING APRON

DRAINAGE DETAILS

©Copyright CMT, Inc.
CMT
CRAWFORD, MURPHY & TILLY, INC.
CONSULTING ENGINEERS
License No. 184-000613

DEKALB TAYLOR MUNICIPAL AIRPORT

DESIGN BY:	CMT-RFD
DRAWN BY:	CMT-RFD
CHECKED BY:	CMT-RFD
APPROVED BY:	DJK
DATE:	3/3/2023
JOB No:	210248-02

FINAL

SHEET 14 OF 18 SHEETS

XREF DWG: Dekalb 2022 Title Block.dwg
IMAGE FILES: DTMA Logo-black.jpg
UPDATE BY: Robert Heinz
LAYOUT: INEW SHEET TEMPLATE!!
DATE: Friday, March 3, 2023 1:37:15 PM
FILE: K:\Dekalb\Ap\210248\02-00_RehabTermApron\Draw\Sheets\210248\02 - Drainage Details.dwg

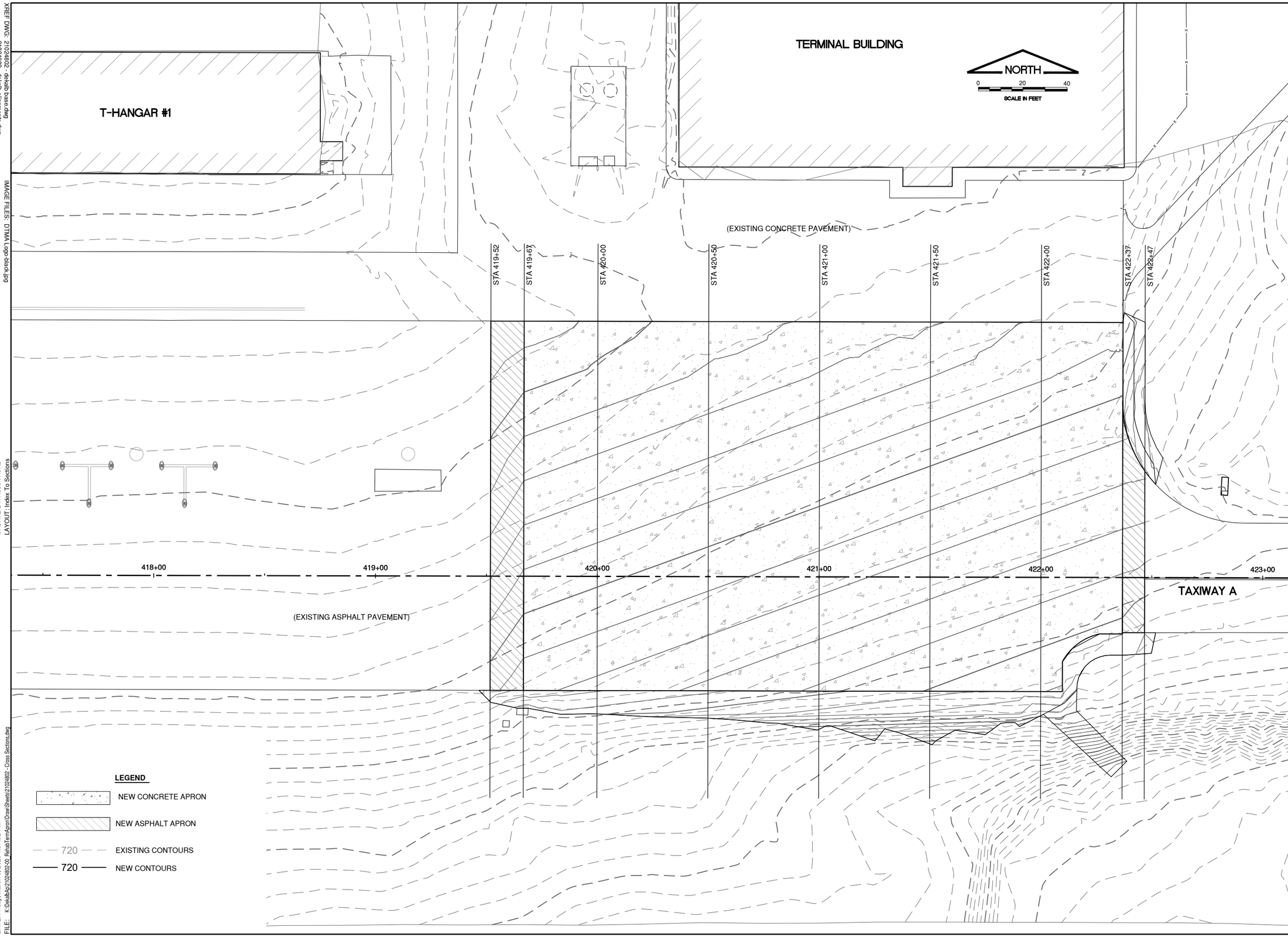

IL. CONTRACT: **DK063**
IL. LETTING ITEM: **01A**
IL. PROJECT: **DKB-4924**
S.B.G. PROJECT: **3-17-SBGP-184**

SURVEY BOOK # ----

REVISIONS		
NUMBER	BY	DATE

0 1 2
THIS BAR IS EQUAL TO 2" AT FULL SCALE (34X22).

DEKALB TAYLOR MUNICIPAL AIRPORT
DEKALB, ILLINOIS
REMOVE AND REPLACE A PORTION OF THE AIRCRAFT PARKING APRON

INDEX TO SECTIONS

©Copyright CMT, Inc.

CMT
CRAWFORD, MURPHY & TILLY, INC.
CONSULTING ENGINEERS
License No. 184-000613

DTMA
DEKALB TAYLOR MUNICIPAL AIRPORT

DESIGN BY:	CMT-RFD
DRAWN BY:	CMT-RFD
CHECKED BY:	CMT-RFD
APPROVED BY:	DJK
DATE:	3/3/2023
JOB No:	210248-02

FINAL

SHEET 15 OF 18 SHEETS

XREF DWG: 210248-02 - dekalb base.dwg
210248-02 - dekalb alignments.dwg
Dekalb 2022 Title Block.dwg
IMAGE FILES: DTMA Logo-black.jpg
UPDATE BY: Robert Heinz
LAYOUT: Index To Sections
DATE: Friday, March 3, 2023 1:37:32 PM
FILE: K:\DekalbApr210248\02-00_RehabTermApron\Draw\Sheets\210248-02 - Cross Sections.dwg

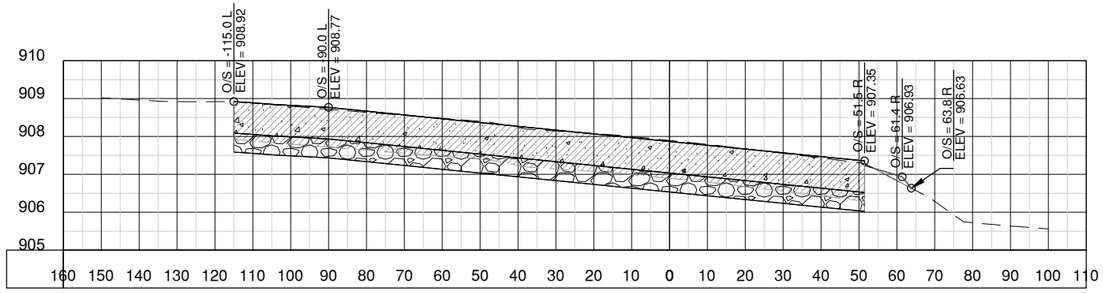

420 + 50

TOTAL VOLUME AT STATION 420+50.00	
UNCLASSIFIED EXCAVATION	54.40 SF
TOPSOIL FILL	0.89 SF
TOPSOIL CUT	0.05 SF

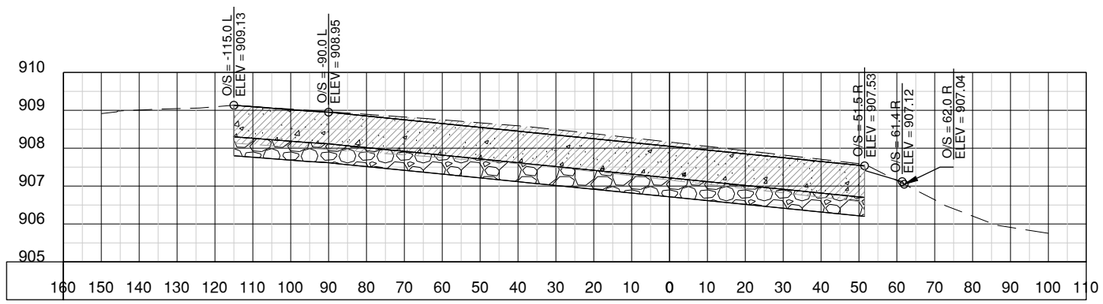

420 + 00

TOTAL VOLUME AT STATION 420+00.00	
UNCLASSIFIED EXCAVATION	69.23 SF
TOPSOIL FILL	0.05 SF
TOPSOIL CUT	0.66 SF

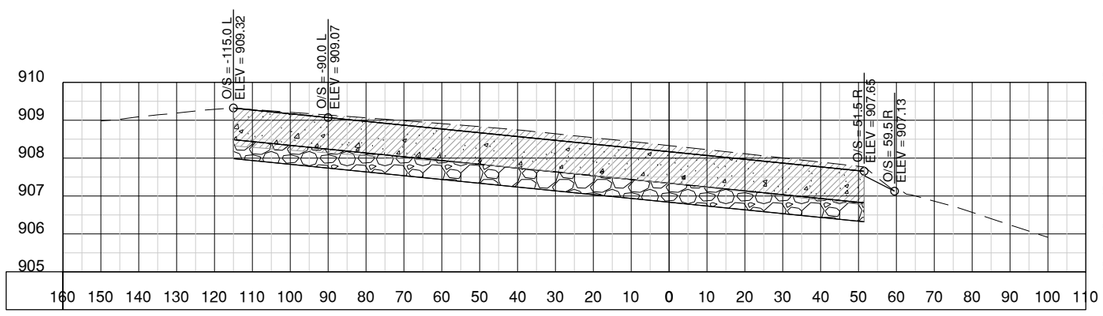

419 + 66

TOTAL VOLUME AT STATION 419+66.76	
UNCLASSIFIED EXCAVATION	76.71 SF
TOPSOIL FILL	0.00 SF
TOPSOIL CUT	0.92 SF

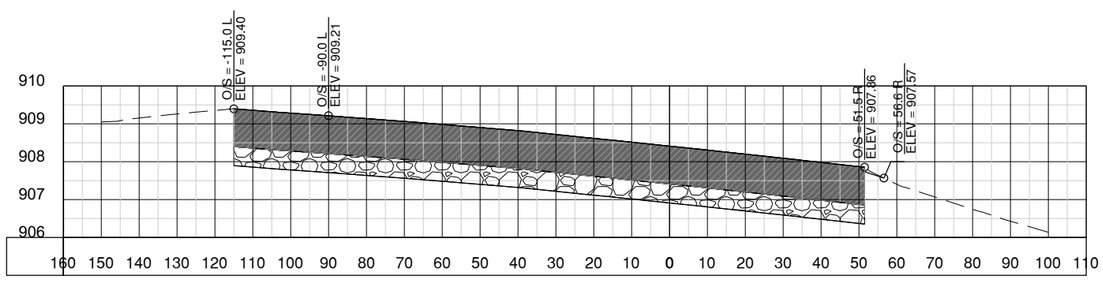

419 + 51

TOTAL VOLUME AT STATION 419+51.76	
UNCLASSIFIED EXCAVATION	83.28 SF
TOPSOIL FILL	0.00 SF
TOPSOIL CUT	0.24 SF

LEGEND

- NEW PAVEMENT STRUCTURE
- NEW 12" AVERAGE PAVEMENT REMOVAL (PCC / BITUMINOUS)
- NEW GROUND LINE
- EXISTING GROUND LINE

NOTES

TOPSOIL CUT AND FILL IN PROPOSED TURF AREAS ARE NOT INCLUDED IN THE EARTHWORK QUANTITIES AND ARE CONSIDERED INCIDENTAL TO (AR152840) SHOULDER ADJUSTMENT.

IL. CONTRACT: **DK063**
IL. LETTING ITEM: **01A**
IL. PROJECT: **DKB-4924**
S.B.G. PROJECT: **3-17-SBGP-184**

SURVEY BOOK # ----

REVISIONS

NUMBER	BY	DATE

0 1 2
THIS BAR IS EQUAL TO 2" AT FULL SCALE (34X22).

DEKALB TAYLOR MUNICIPAL AIRPORT
DEKALB, ILLINOIS
REMOVE AND REPLACE A PORTION OF THE AIRCRAFT PARKING APRON

CROSS SECTIONS - 1

©Copyright CMT, Inc.
CMT
CRAWFORD, MURPHY & TILLY, INC.
CONSULTING ENGINEERS
License No. 184-000613

DEKALB TAYLOR MUNICIPAL AIRPORT

DESIGN BY:	CMT-RFD
DRAWN BY:	CMT-RFD
CHECKED BY:	CMT-RFD
APPROVED BY:	DJK
DATE:	3/3/2023
JOB No:	210248-02

FINAL

XREF DWG: 21024802 - dekalb base.dwg
21024802 - dekalb alignments.dwg
Dekalb 2022 Title Block.dwg
IMAGE FILES: DTMA Logo-black.jpg
UPDATE BY: Robert Heinz
LAYOUT: CROSS SECTION 1
DATE: Friday, March 3, 2023 1:37:34 PM
FILE: K:\Dekalb\Ap\210248202-00_RehabTermApron\Draw\Sheets\21024802- Cross Sections.dwg

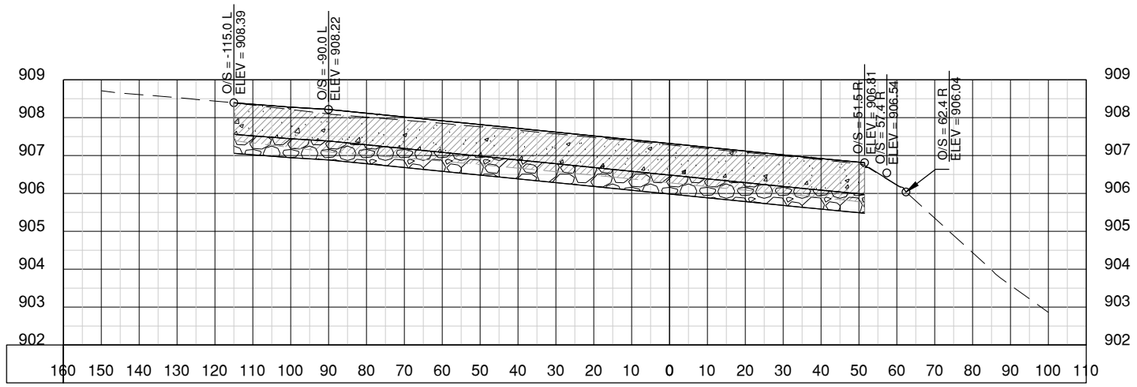

422 + 00

TOTAL VOLUME AT STATION 422+00.00	
UNCLASSIFIED EXCAVATION	46.82 SF
TOPSOIL FILL	0.88 SF
TOPSOIL CUT	0.02 SF

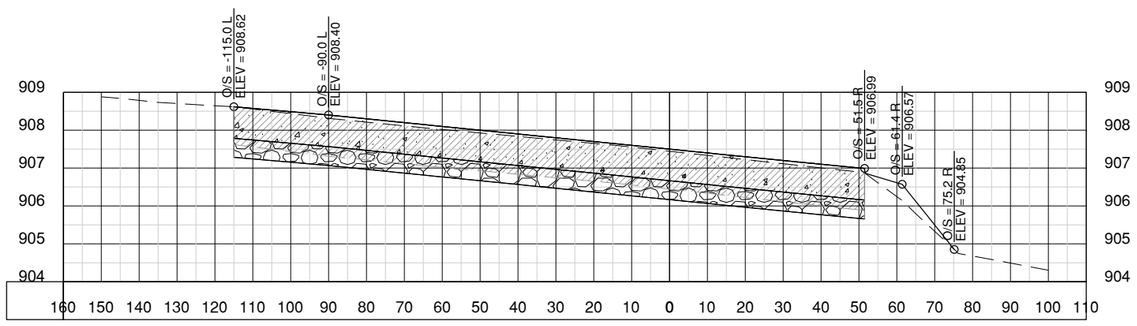

421 + 50

TOTAL VOLUME AT STATION 421+50.00	
UNCLASSIFIED EXCAVATION	44.16 SF
TOPSOIL FILL	5.12 SF
TOPSOIL CUT	0.00 SF

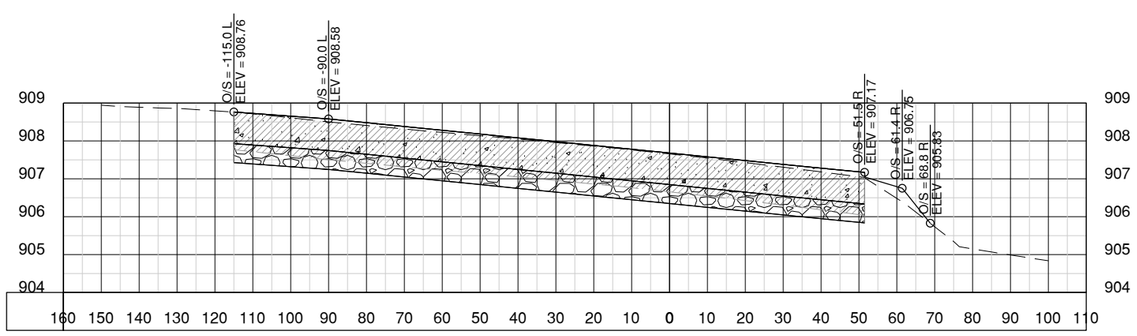

421 + 00

TOTAL VOLUME AT STATION 421+00.00	
UNCLASSIFIED EXCAVATION	47.18 SF
TOPSOIL FILL	3.17 SF
TOPSOIL CUT	0.00 SF

LEGEND

- NEW PAVEMENT STRUCTURE
- NEW 12" AVERAGE PAVEMENT REMOVAL (PCC / BITUMINOUS)
- NEW GROUND LINE
- EXISTING GROUND LINE

NOTES

TOPSOIL CUT AND FILL IN PROPOSED TURF AREAS ARE NOT INCLUDED IN THE EARTHWORK QUANTITIES AND ARE CONSIDERED INCIDENTAL TO (AR152840) SHOULDER ADJUSTMENT.

IL. CONTRACT: **DK063**
IL. LETTING ITEM: **01A**
IL. PROJECT: **DKB-4924**
S.B.G. PROJECT: **3-17-SBGP-184**

SURVEY BOOK # ----

REVISIONS

NUMBER	BY	DATE

0 1 2
THIS BAR IS EQUAL TO 2" AT FULL SCALE (34X22).

DEKALB TAYLOR MUNICIPAL AIRPORT
DEKALB, ILLINOIS
REMOVE AND REPLACE A PORTION OF THE AIRCRAFT PARKING APRON

CROSS SECTIONS - 2

©Copyright CMT, Inc.
CMT
CRAWFORD, MURPHY & TILLY, INC.
CONSULTING ENGINEERS
License No. 184-000613

DITMAR
DEKALB TAYLOR MUNICIPAL AIRPORT

DESIGN BY:	CMT-RFD
DRAWN BY:	CMT-RFD
CHECKED BY:	CMT-RFD
APPROVED BY:	DJK
DATE:	3/3/2023
JOB No:	210248-02

FINAL

XREF DWG: 21024802 - dekalb base.dwg
21024802 - dekalb alignments.dwg
Dekalb 2022 Title Block.dwg
IMAGE FILES: DTMA Logo-black.jpg
UPDATE BY: Robert Heinz
LAYOUT: CROSS SECTION 2
DATE: Friday, March 3, 2023 1:37:36 PM
FILE: K:\Dekalb\Ap\210248202-00_RehabTermApron\Draw\Sheets\210248202- Cross Sections.dwg

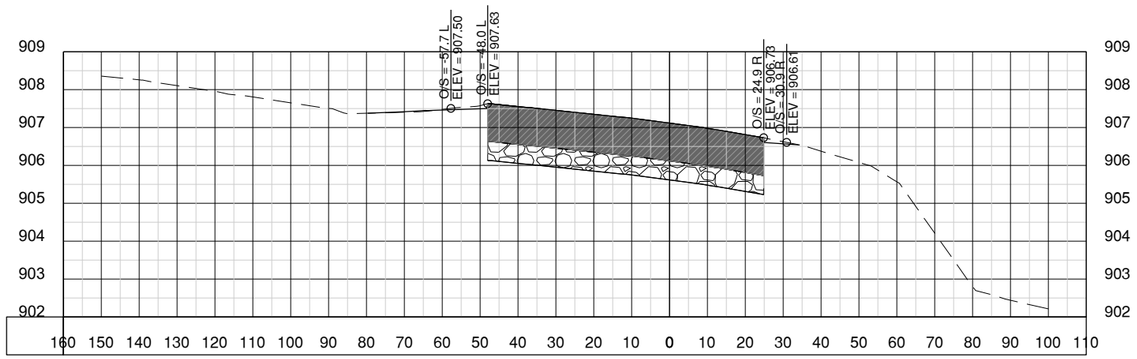

422 + 46

TOTAL VOLUME AT STATION 422+46.76	
UNCLASSIFIED EXCAVATION	36.41 SF
TOPSOIL FILL	0.00 SF
TOPSOIL CUT	0.57 SF

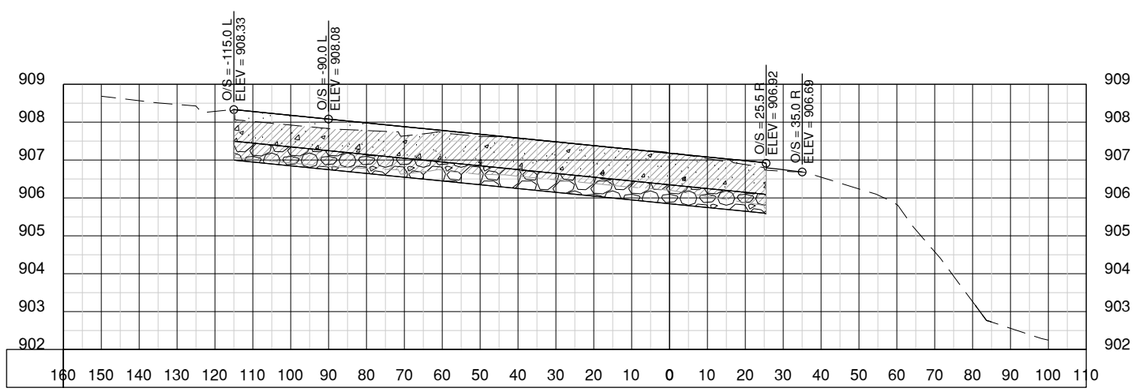

422 + 36

TOTAL VOLUME AT STATION 422+36.76	
UNCLASSIFIED EXCAVATION	32.61 SF
TOPSOIL FILL	0.33 SF
TOPSOIL CUT	0.00 SF

LEGEND

- NEW PAVEMENT STRUCTURE
- NEW 12" AVERAGE PAVEMENT REMOVAL (PCC / BITUMINOUS)
- NEW GROUND LINE
- EXISTING GROUND LINE

NOTES

TOPSOIL CUT AND FILL IN PROPOSED TURF AREAS ARE NOT INCLUDED IN THE EARTHWORK QUANTITIES AND ARE CONSIDERED INCIDENTAL TO (AR152840) SHOULDER ADJUSTMENT.

IL. CONTRACT: **DK063**
IL. LETTING ITEM: **01A**
IL. PROJECT: **DKB-4924**
S.B.G. PROJECT: **3-17-SBGP-184**

SURVEY BOOK # ----

REVISIONS

NUMBER	BY	DATE

0 1 2
THIS BAR IS EQUAL TO 2" AT FULL SCALE (34X22).

DEKALB TAYLOR MUNICIPAL AIRPORT
DEKALB, ILLINOIS
REMOVE AND REPLACE A PORTION OF THE AIRCRAFT PARKING APRON

CROSS SECTIONS - 3

©Copyright CMT, Inc.
CMT
CRAWFORD, MURPHY & TILLY, INC.
CONSULTING ENGINEERS
License No. 184-000613

DITMA
DEKALB TAYLOR MUNICIPAL AIRPORT

DESIGN BY:	CMT-RFD
DRAWN BY:	CMT-RFD
CHECKED BY:	CMT-RFD
APPROVED BY:	DJK
DATE:	3/3/2023
JOB No:	210248-02

FINAL

SHEET 18 OF 18 SHEETS

XREF DWG: 21024802 - dekalb base.dwg
21024802 - dekalb alignments.dwg
Dekalb 2022 Title Block.dwg

IMAGE FILES: DTMA Logo-black.jpg

UPDATE BY: Robert Heinz
LAYOUT: CROSS SECTION 3

DATE: Friday, March 3, 2023 1:37:38 PM
FILE: K:\DekalbApr21024802-00_RehabTermApron\Draw\Sheets\21024802 - Cross Sections.dwg

SECTION III

Special Provisions

for

REMOVE AND REPLACE A PORTION OF THE AIRCRAFT PARKING APRON

ILLINOIS PROJECT: DKB-4924
S.B.G. PROJECT: 3-17-SBGP-184

at

DEKALB TAYLOR MUNICIPAL AIRPORT
DEKALB, ILLINOIS

March 3, 2023

LICENSED PROFESSIONAL ENGINEER
ROBERT M. HEINZ
062.071687
STATE OF ILLINOIS

Expires 11/30/2023

Prepared By:

CRAWFORD, MURPHY & TILLY, INC.
CONSULTING ENGINEERS
550 N. COMMONS DRIVE, SUITE 116
AURORA, ILLINOIS 60504
http://www.cmtengr.com

21024802.00

GENERAL

These Special Provisions, together with applicable Standard Specifications, Contract Requirements for Airport Improvement Project, Rules and Regulations, Payroll Requirements and Minimum Wage Rates which are hereto attached or which by reference are herein incorporated, cover the requirements of the State of Illinois, Division of Aeronautics, and the representatives of the City of DeKalb for the improvements to the DeKalb Taylor Municipal Airport, DeKalb, Illinois.

GOVERNING SPECIFICATIONS AND RULES AND REGULATIONS

The **"Standard Specifications for Construction of Airports"**, State of Illinois, Department of Transportation, Division of Aeronautics, adopted September 25, 2020 shall govern the project except as otherwise noted in these Special Provisions. In the case of conflict with any part or parts of said specifications, the said Special Provisions shall take precedence and shall govern.

Specifications may be obtained at

http://www.idot.illinois.gov/home/resources/Manuals/Manuals-and-Guides

Where referenced within the Special Provisions, the Illinois Department of Transportation Standard Specifications for Road and Bridge Construction adopted January 1, 2022 shall apply.

INDEX TO SPECIAL PROVISIONS

ITEM DESCRIPTION PAGE NUMBER

PART 1 – GENERAL CONTRACT PROVISIONS 1

SECTION 40 – Scope of Work 1
SECTION 50 – Control of Work 4
SECTION 60 – Control of Materials 7
SECTION 70 – Legal Regulations and Responsibity to Public 8
SECTION 80 – Prosecution and Progress 10

PART 2 – GENERAL CONSTRUCTION ITEMS 12

ITEM 105 – Mobilization 12
ITEM 150 – Resident Engineer Field Office 13

PART 3 – SITEWORK 14

ITEM 101 – Preparation/Removal of Existing Pavements 14
ITEM 152 – Excavation, Subgrade and Embankment 16
ITEM 153 – Controlled Low-Strength Material (CLSM) 21

PART 4 – BASE COURSES 22

ITEM 208 – Aggregate Base Course 22
ITEM 209 – Crushed Aggregate Base Course 25

PART 6 - FLEXIBLE PAVEMENTS 26

ITEM 401 – Asphalt Mix Pavement Surface Course 26
ITEM 403 – Asphalt Mix Pavement Base Course 28

PART 7 – RIGID PAVEMENT 30

ITEM 501 – Cement Concrete Pavement 30

PART 9 – MISCELLANEOUS 33

ITEM 602 – Emulsified Asphalt Prime Coat 33
ITEM 603 – Emulsified Asphalt Tack Coat 34
ITEM 605 – Joint Sealants for Pavements 35
ITEM 610 – Concrete for Miscellaneous Structures 36
ITEM 620 – Runway and Taxiway Marking 37

PART 11 – DRAINAGE 38

ITEM 705 – Pipe Underdrains for Airports 38

PART 12 – TURFING 41

ITEM 901 – Seeding 41
ITEM 905 – Topsoil 43
ITEM 908 – Mulching 44

APPENDIX A - IDOT DIVISION OF AERONAUTICS POLICY MEMORANDA ..... A

21-1 ACCEPTED CEMENT TYPES

22-2 OBTAINING APPROVED AGGREGATES COMPLYING WITH 2020 STANDARD SPECIFICATIONS FOR CONSTRUCTION OF AIRPORTS

87-2 DENSITY ACCEPTANCE OF BITUMINOUS PAVEMENTS

87-3 MIX DESIGN, TEST BATCH, QUALITY CONTROL, AND ACCEPTANCE TESTING OF PCC PAVEMENT MIXTURE

87-4 DETERMINATION OF BULK SPECIFIC GRAVITY (d) OF COMPACTED BITUMINOUS MIXES

96-1 ITEM 610, STRUCTURAL PORTLAND CEMENT CONCRETE: JOB MIX FORMULA APPROVAL & PRODUCTION TESTING.

96-3 REQUIREMENTS FOR QUALITY ASSURANCE ON PROJECTS WITH BITUMINOUS CONCRETE PAVING

2001-1 REQUIREMENTS FOR COLD WEATHER CONCRETING

2003-1 REQUIREMENTS FOR LABORATORY, TESTING, QUALITY CONTROL, AND PAVING OF SUPERPAVE BITUMINOUS CONCRETE MIXTURES FOR AIRPORTS

HMA COMPARISON SAMPLE

PART 1 – GENERAL CONTRACT PROVISIONS

SECTION 40 – SCOPE OF WORK

40-05 MAINTENANCE OF TRAFFIC

ADD:

l. To maintain airport operations and to facilitate the construction of the proposed work, the project has been divided into separate phases in accordance with Advisory Circular 150/5370-2G *Operational Safety on Airports During Construction*. References to Construction Safety and Phasing Plans (CSPP) in that document shall be interpreted to mean the phase limits, barricade locations, access points and notes shown on the construction activity plan sheets included in the as-bid contract documents. When "safety" is used or referred to in the contract documents and in the advisory circular(s) it shall be redefined by this contract as meaning "operational safety". The Construction Operational Safety and Phasing Plan (CSPP) establishes the airport and project specific requirements, supplementing the requirements in the AC, that are to be included in the contractor's bid for maintaining operational safety during construction.

m. The Construction Safety and Phasing Plan (CSPP) contained herein has been approved by both the Airport and the FAA. The contractor shall be required to divide the overall work into separate phases in substantial conformance with the CSPP shown in the plans, except as allowed by the contract documents and approved by the Division on behalf of the FAA. Durations specified for individual phases shall become requirements of the contract and shall be subject to liquidated damages.

n. The contractor activity on the airfield shall be limited to the limits of construction as identified on the construction activity plan drawings. Beyond the limits of construction the contractor shall not have access to any part of the active airfield pavement with any equipment or personnel without the approval of Airport Management.

o. Maintenance of Airport Systems are critical to the operation of the Airport and the safety and/or security of the traveling public. Prior to beginning work the contractor shall investigate existing systems which may be located within the work area and locate all existing utilities. The contractor may seek assistance from the Julie, Engineer, Resident Engineer, Airport and FAA with locating utilities but the final responsibility for all utility locates lies solely with the contractor. If the Contractor's investigation reveals that a utility must be relocated to allow for the performance of the work in the plans, the contractor shall immediately notify the Resident Engineer and remain clear of the utility until resolution has been determined by the Division and the Airport. Any system, including but not limited to systems associated with security, air navigation, weather, airfield lighting damaged by the Contractor's operations shall be immediately repaired to the satisfaction of the owner. No delay shall be taken in the repair of the damaged facility. The Contractor shall not be allowed to finish work for the day until the utility has been repaired.

p. The contractor shall provide his own radio capable of transmitting and receiving on the Unicom frequencies noted in the plans.

q. The Contractor shall provide and maintain construction entrance signage on all public use roads intended to be used by his operations as required by the Illinois Department of Transportation, or the jurisdictional agency of the road. The Contractor shall be responsible for coordinating all hauling and access on State, City, Township or County roads with the agency responsible for the roadway.

r. If it is found the fully loaded delivery trucks are excessively damaging the Airport or local roadway pavement, the Contractor shall limit the weight of the material being hauled onto the site. The Resident Engineer shall determine what is considered excessive damage. No payments will be made for additional hauling that may be required due to load restrictions.

s. The Contractor shall be required to provide a 24-hour phone number for emergency barricades and barricade lighting maintenance.

40-09 SAFETY PLAN COMPLIANCE DOCUMENT (SPCD)

REVISE: The first sentence of the first paragraph to read:

10 days prior to the preconstruction conference, the Contractor shall submit a SPCD to the Airport describing how he will comply with the requirements of the AC plus the CSPP and supplying any details that could not be determined before contract award.

ADD:

40-10 BARRICADES, WARNING SIGNS AND HAZARD MARKINGS.

The Contractor shall furnish, erect, and maintain all barricades, warning signs, and markings for hazards necessary to protect the public and the work. When used during periods of darkness, such barricades, warning signs and hazard markings shall be suitably illuminated. Unless otherwise specified, barricades, warning signs, and markings for hazards that are in the air operations area shall be a maximum of 18 inches high. Unless otherwise specified, barricades shall be spaced not more than 10 feet apart.

For vehicular and pedestrian traffic, the Contractor shall furnish, erect, and maintain barricades, warning signs, lights and other traffic control devices in reasonable conformity with the Manual of Uniform Traffic Control Devices for Streets and Highways (published by the United States Government Printing Office).

Any cost for signage or traffic control shall be borne by the Contractor.

Barricades, as approved by the FAA, shall be provided per the details in the plan sheets. The barricades shall be lighted with steady burn omni-directional red lights supplemented with a 20” x 20” orange flag.

Barricades shall be placed as shown in the plans or as directed by the Resident Engineer or Airport.

The Contractor shall be responsible for supplying, maintaining and any moving of all barricades. Lights shall be maintained in proper working order. No separate payment will be made for supplying, maintaining and moving barricades but shall be considered incidental to the contract.

When the work requires closing an air operations area of the airport or portion of such area, the Contractor shall furnish, erect, and maintain temporary markings and associated lighting conforming to the requirements of FAA Advisory Circular 150/5340-1 (latest revision), *Standards for Airport Markings*.

The Contractor shall furnish, erect, and maintain markings and associated lighting of open trenches, excavations, temporary stockpiles, and his/her parked construction equipment that may be hazardous to the operation of emergency fire-rescue or maintenance vehicles on the airport in reasonable conformance to FAA Advisory Circular 150/5370-2 (latest revision), *Operational Safety on Airports During Construction*.

The Contractor shall identify each motorized vehicle or piece of construction equipment in reasonable conformance to FAA Advisory Circular 150/5370-2 (latest revision).

Mark and identify vehicles in accordance with AC 150/5210-5 (latest revision) *Painting, Marking and Lighting of Vehicles Used on an Airport.* When any vehicle is required to travel over any portion of the aircraft movement area (within the existing perimeter fence) and runway approach area, the vehicle shall be properly identified to operate in the area or provided with a flag on a staff attached to the vehicle so that the flag will be readily visible. The flag should be not less than 3-feet square consisting of a checkered

pattern of international orange and white squares of not less than one foot on each side and displayed in full view above the vehicle. A flag or escort vehicle is not required for vehicles which have been painted, marked and lighted for routine use on aircraft movement areas. Any vehicle operating on the movement area during the hours of darkness should be equipped with an amber flashing dome-type light, in accordance with local and/or state codes.

The Contractor shall furnish and erect all barricades, warning signs, and markings for hazards prior to commencing work which requires such erection and shall maintain the barricades, warning signs, and markings for hazards until their dismantling is directed by the Resident Engineer.

Open-flame type lights shall not be permitted within the air operations areas of the airport.

SECTION 50 – CONTROL OF WORK

50-05 COOPERATION BETWEEN CONTRACTORS

REVISE: The first sentence of the second paragraph to read:

The contractor shall plan and conduct his/her work so as not to interfere or hinder the progress of work being performed by other contractors or Airport personnel.

50-06 CONSTRUCTION LAYOUT AND STAKES

DELETE: The first paragraph.

ADD: As the first paragraph:

The Contractor will be required to furnish and place construction layout stakes for this project. The establishment of survey control and/or reestablishment of survey control shall be by a State Licensed Land Surveyor.

DELETE: The second paragraph.

ADD: As the second paragraph:

The Resident Engineer will locate and reference three (3) control points and will establish benchmarks along the line of the improvement outside construction limits. The Contractor shall locate and reference the centerline of survey, which shall also consist of locating and referencing control points such as point of curvature, points of tangent, and sufficient points on tangent to provide a line of sight. Control points set by the Resident Engineer shall be identified in the field to the Contractor, and the field notes shall be kept in the office of the Resident Engineer.

ADD:

Benchmarks will be established along the project outside of construction lines.

It is not the responsibility of the Resident Engineer to check the correctness of the Contractor's stakes or forms, except as provided herein; however, any errors that are apparent shall be immediately called to the Contractor's attention, and he shall be required to make the necessary correction before the stakes are used for construction purposes.

The Contractor shall immediately notify the Resident Engineer of conflicts or discrepancies with the established control points.

50-10 LOAD RESTRICTIONS

ADD:

Access to the construction work area is limited to the haul routes as shown on the construction activity plan drawings. The use of existing airfield pavements by contractor construction traffic including all haul trucks is prohibited unless previously approved by the Airport Management. Any damage to existing Airport pavement due to construction traffic operating beyond the approved work limits, hauling outside of the approved haul/access routes and construction traffic operating in prohibited areas shall be repaired by the Contractor at his own expense to the satisfaction of the owner.

Contractor's use of existing airfield and perimeter pavements by equipment and loaded trucks shall be minimized. The Contractor shall be responsible for damage to any airfield pavement or public road caused by his construction operations. **Any damage to existing airfield, landside and perimeter pavements shall be repaired by the Contractor at his own expense to the satisfaction of the Owner. Contractor shall obtain written permission from the Airport Owner to use any airfield pavements.**

50-11 MAINTENANCE DURING CONSTRUCTION

ADD: The contractor shall make provisions in the work to maintain positive drainage from the work areas and to minimize the ponding of water. In areas where the contractor is required to core out or remove pavements the contractor shall cut temporary ditches or swales to maintain positive drainage. At locations where temporary ditches are not feasible, the contractor shall excavate storm water storage areas adjacent to but at a lower elevation than the bottom of the work and utilize mechanical pumps to promptly remove storm water from the excavations. All existing pavement areas that are to remain open to aircraft traffic shall be kept clean to the satisfaction of Airport Manager and the Resident Engineer. At the request of the Resident Engineer or of the Airport, the Contractor shall provide a self-propelled, vacuum or regenerative (recirculating) air pavement sweeper, a pavement blower or tractor mounted “sweeper box”. At a minimum, a pavement blower shall be kept on site at all times.

ADD:

Material tracked onto public streets shall be removed continuously during the work.

No material capable of being blown onto airfield pavement will be allowed to be stored uncovered anywhere within the fence line, at any time during construction.

50-14 FINAL ACCEPTANCE

DELETE: The first sentence of the first paragraph.

ADD: As the first sentence of the first paragraph.

Upon due notice to the Resident Engineer from the Contractor of presumptive completion of the entire project, the charging of Contract Time shall be suspended, and the Engineer will make an inspection.

ADD: After the first sentence of the second paragraph:

The charging of Contract Time shall resume on the day following the inspection and shall continue until the remaining work, including the applicable requirements of Section 40-08, Final Clean-up, is completed to the Engineer’s satisfaction.

50-16 PLANS AND WORK DRAWINGS

REVISE: The second sentence of the eleventh (11th) paragraph to read as follows:

Such review will not relieve the Contractor of the responsibility for complying with the contract document requirements or for any error that may exist in the submittal. The Contractor is responsible for the dimensions and designs of adequate connections, detail and satisfactory construction of all work.

REVISE: The 15th paragraph to read:

Shop drawing submittals that do not include the information below will be rejected and returned to the Contractor. Information to be included on shop drawing submittals shall conform to the following:

PROJECT LOCATION: DeKalb Taylor Municipal Airport

PROJECT TITLE:	**Remove & Replace a Portion of the Aircraft Parking Apron**
PROJECT NUMBERS:	**Illinois Project No.: DKB-4924** **AIP Project No.: 3-17-SBGP-184**
CONTRACT ITEM:	**(i.e. AR603510 Bituminous Tack Coat)**
SPECIFICATION:	**Section in the Specifications (i.e. 603-2.1 Asphalt Materials)**
SUBMITTED BY:	**(Contractor/Subcontractor Name)**
DATE:	**(Date of Submittal)**

ADD: To the end of the 18th paragraph:

d. "Rejected": Submittal shall not be used at the project site.

SECTION 60 – CONTROL OF MATERIALS

60-01 SOURCE OF SUPPLY AND QUALITY REQUIREMENTS

REVISE: The third paragraph to read:

As a minimum, the Contractor shall provide, prior to delivery, statements (shipment tickets, source, certificate of analysis (COA), sample, etc.) as required by the current Illinois Department of Transportation, Bureau of Airport Engineering Manual for Documentation of Airport Materials or as requested by the Engineer of Airport Construction and Materials.

REVISE: The eleventh paragraph to read:

The Contractor shall furnish airport lighting equipment that meets the requirements of the specifications; and is listed in the current Federal Aviation Administration Advisory Circular (AC) 150/5345-53, Airport Lighting Equipment Certification Program and Addendum, that is in effect on the date of advertisement; and meets "Buy America" requirements.

60-03 CERTIFICATION OF compliance/analysis (COC/COA)

ADD: After the sixth (8th) paragraph:

The Contractor shall certify all materials contained in the contract. Certification and documentation shall be submitted to the Resident Engineer and Project Engineer. It shall be the sole responsibility of the Contractor to ensure the delivery of adequate and accurate documentation prior to the delivery of materials. Materials incorporated into this project without approved certification and documentation will not be recommended for payment by the Resident Engineer. **It shall be the sole responsibility of the Contractor to provide certification that ALL materials to be used on the project meet the "Buy American" requirements.**

The certification shall be submitted as part of the shop drawing submittal.

SECTION 70 – LEGAL REGULATIONS AND RESPONSIBITY TO PUBLIC

70-08 PUBLIC CONVENIENCE AND SAFETY

ADD: at end of the Section:

The contractor shall provide, install and maintain any warning signs (trucks entering highway, etc.) as required by the County Division of Transportation and the City of DeKalb and/or the responsible agency that maintains the roadway. The cost to the warning signage as required by the agency responsible for the roadway for the duration of the contract shall be at no additional cost to the contract.

70-16 CONTRACTOR'S RESPONSIBILITY FOR UTILITY SERVICE AND FACILITIES OF OTHERS

REVISE: The second paragraph as follows:

". . ., the approximate locations and owners have been indicated on the plans."

ADD: After the eight (8th) paragraph:

The following table includes contact numbers that may provide assistance for locating cable. The personnel listed in the table are in no way responsible for damage to existing utilities.

DEKALB TAYLOR MUNICIPAL AIRPORT

Utility Service or Facility	Contact (Person)	Contact (Phone)
AT&T – Telephone Cables	J.U.L.I.E. (Joint Utility Locating Information for Excavators)	1-800-892-0123
ComEd - Electric Cables	J.U.L.I.E. (Joint Utility Locating Information for Excavators)	1-800-892-0123
NICOR - Gas Lines	J.U.L.I.E. (Joint Utility Locating Information for Excavators)	1-800-892-0123
FAA Control and Communication Cables	FAA Sector Office	1-630-587-7801

REPLACE: paragraph eleven (11) with;

If, in the Contractor's opinion, additional assistance is needed to locate the utility service or facility, the contractor shall enlist the assistance of a qualified technician or professional utility location firm to accurately locate underground utilities or facilities prior to excavation. Prior to commencing this detailed location work in the general vicinity of an existing utility service or facility, the Contractor shall again notify each such owner of his/her plan of operation and request the presence of a representative of the owner to observe the work. Such notification shall be given by the most expeditious means to reach the utility owner's PERSON TO CONTACT no later than two normal business days prior to the Contractor's commencement of operations in such general vicinity. The Contractor shall furnish a written summary of the notification to the Engineer.

Only after the investigation has been made should the contractor begin excavation operations. Upon beginning these operations, the contractor shall use extreme caution in the methods utilized. The contractor shall utilize exploratory trenching or small tool excavation practices when beginning operations in critical

areas to verify that the utilities are clear of the area of interest or to verify the location and depth of these facilities.

Any utility damaged by the Contractor shall be repaired by the Contractor to the satisfaction of the Owner and shall be at the cost of the Contractor. In the event that an existing utility is damaged during construction, all other work on the project shall be suspended until the utility is repaired. No additional time will be awarded to the Contractor for delays in the project due to damaged utilities. It is a high priority to the airport that all existing Airport utilities, unless otherwise noted in the plans, remain in good working condition throughout the duration of the project.

Special care shall be taken on all operations and particularly near pavement edges to avoid damage to edge lights and all underground electrical cable on the airport. The approximate location of existing underground cable is shown on drawings. Any airfield lights or cable that are broken and require replacement because of the Contractor's operations will be replaced by the Contractor at his/her own expense.

Any airfield cable repairs or replacement to any part of the electrical system made necessary by the Contractor's operations will be made by him/her in the manner specified in Sections 108 and 125 at no cost to the Airport. Cost of replacement to be borne by the Contractor shall include any expense incurred in locating as well as repairing or replacing damaged parts of the system by the owning agency.

70-25 CONTRACTOR'S RESPONSIBILITY FOR SAFETY DURING CONSTRUCTION

ADD:

e. Review the requirements in AC 150/5370-2 (current edition) and comply with items listed as contractor's responsibility.

f. Implement a CSPP and SPCD as required in AC 150/5370-2 (current edition) and ensure that construction personnel are familiar with operational safety procedures and regulations on the Airport.

g. Provide a 24-hour point of contact that will coordinate an immediate response to correct any construction-related activity that may adversely affect the operational safety of the Airport.

h. Provide a safety officer/construction inspector(s) trained in airport safety to maintain the CSPP and SPCD and to monitor all construction activities.

i. Restrict movement of construction vehicles to construction areas as flagging and barricading, erecting temporary fencing, or providing escorts, as appropriate.

j. Ensure that no construction employees, employees of subcontractors or suppliers, or other persons enter any part of the aircraft operations area from construction site unless authorized.

SECTION 80 – PROSECUTION AND PROGRESS

80-05 LIMITATION OF OPERATIONS

ADD: After the fourth (4th) paragraph:

A minimum distance shall be maintained between construction operations and the centerline of all active taxiways, taxilanes and runways as noted on the Construction Safety and Phasing Plan. It is intended to plan, conduct, and complete the work in these critical traffic areas in such a manner that the length and amount of interruption to aircraft traffic at the Airport is minimized.

The Contractor shall comply with Federal Aviation Regulations and with all rules and regulations of the Airport, including, but not limited to, control and access to the airfield by Contractor's, employees and agents. In the event the Authority is assessed a fine by the Federal Aviation Administration for breach of security resulting from actions of Contractor's employees and agents, the Contractor shall fully reimburse the Authority for the amount of such fine in the form of additional rents.

Work within a Runway Safety Area (RSA) and Taxiway Object Free Area (TOFA) will require closure of the Runway or Taxiway as shown in the Construction Safety and Phasing Plan. Runway closure markers shall be placed prior to initiating work. The Contractor shall place barricades at all locations shown on the plans. Any cable or unit duct protruding from the ground shall be secured flat using sand bags or other methods approved by the Resident Engineer.

80-08 DETERMINATION AND EXTENSION OF CONTRACT TIME

ADD: After the fourth paragraph:

The Engineer will make charges against Contract Time after the presumptive completion of the entire project as provided for in Section 50-16, Final Inspection.

ADD: After the last paragraph of this section:

For this project, the following number of calendar days available for work per month has been assumed to be:

Month	Workable Calendar Days
January	0
February	0
March	0
April	0
May	15
June	17
July	17
August	17
September	16
October	16
November	14
December	0

For an extension of contract time due to inclement weather to be considered, the actual total number of calendar days available for work on controlling items must be less than the total number of workable calendar days assumed for the duration of the contract.

Requests for extension of contract time on calendar day projects caused by inclement weather, shall, as a minimum, be supported with National Weather Bureau data and project diaries. Requests for extension of contract time due to inclement weather will not be considered until after final acceptance.

As part of the request for contract time extension review, consideration may be given to how timely the Contractor prosecuted the work up to the point of the delays and the efforts by the Contractor to get back on schedule including the addition of labor or equipment and the extension of work hours and workdays.

No allowance will be made for anticipated profits.

ADD:

80-14 CONTRACTOR'S ACCESS TO AIRFIELD

The location of an area for parking by the Contractor's employees shall be as shown on the plans or as agreed to by the Airport.

Use of personal vehicles beyond the airport perimeter fence line will not be allowed.

When not in use, the Contractor's vehicles and equipment shall park in the location shown on the plans or in an area outside the Runway Safety Areas (RSAs), Runway Object Free Zones (ROFZs), and Object Free Area (OFAs). The Contractor's vehicles and equipment shall not be parked on a closed taxiway or runway. Parking equipment shall not obstruct any runway visual aids, signs or navigational aids or penetrate Part 77 surfaces.

ADD:

80-15 SECURITY DURING CONSTRUCTION

As a minimum, the Contractor shall be responsible for security during construction as follows:

1. Visibly delineate his construction zone by placing a line of barricades or flagging around the entire work zone.

2. Keep construction personnel inside the work area delineated by barricades.

3. Ensure that construction personnel are familiar with security procedures and regulations on the Airport.

4. Restrict movement of construction vehicles to construction areas as flagging and barricading, erecting temporary fencing, or providing escorts, as appropriate or as shown in plans.

5. The Contractor shall be required to maintain security on the Airport as specified or as directed by the Airport.

6. The Contractor shall provide a complete list of personnel that will be employed while on site and update the list as needed. The contractor shall limit access to the AOA. The Contractor shall be responsible for monitoring the access gate during work hours. If the Contractor chooses to leave the gate open, then he shall monitor the gate to prevent unauthorized entries.

7. The contractor shall provide his own padlock to secure the gate used for access.

PART 2 – GENERAL CONSTRUCTION ITEMS

ITEM 105 – MOBILIZATION

DESCRIPTION

105-1.1

REVISE the third paragraph to read:

This item also includes all efforts related to restoration of the project site, staging areas and haul roads as directed in the bidding documents at the conclusion of the job. This activity includes, but is not limited to, incidental grading, seeding and clean-up, as required to restore the project site to original condition.

BASIS OF PAYMENT

ADD:

Payment will be made under:

ITEM AR150520 MOBILIZATION – PER LUMP SUM.

ITEM 150 – RESIDENT ENGINEER FIELD OFFICE

DESCRIPTION

150-1.1

ADD:

The Airport will provide a location for the Field Office within proximity to the work areas. The Contractor shall be responsible for furnishing and maintaining the space as stated herein.

CONSTRUCTION METHODS

150-2.1

DELETE (b) in paragraph 4.

ADD: the following in paragraph 4 under (h):

The copier shall be capable of scanning documents into pdf format for direct download into the resident engineer's computer. Ink replenishment and paper shall be supplied by the contractor. The scanning capabilities shall allow for creation of pdf documents for field books and plan sheets. A multiple sheet document feeder shall also be included for scanning multiple sheet documents such as field reports and catalog cuts.

BASIS OF PAYMENT

150-4.1

ADD:

Payment will be made under:

ITEM AR150510 ENGINEER'S FIELD OFFICE – PER LUMP SUM.

PART 3 – SITEWORK

ITEM 101 – PREPARATION/REMOVAL OF EXISTING PAVEMENTS

DESCRIPTION

101-1.1

ADD:

This item shall consist of 12-13" bituminous pavement removal, concrete pavement removal and tie-down removals at the locations shown on the plans.

The type of material to be removed along with approximate typical pavement section is shown on the plans. Pavement structure information was taken from airport records, data supplied by airport personnel and soil borings. The Contractor shall verify the type and thickness of material to be removed. **No extra compensation will be allowed for any variations in the pavement sections actually encountered.**

CONSTRUCTION

101-3.16d REMOVAL OF PIPE AND OTHER BURIED STRUCTURES

ADD:

c. **Removal of Tie-Downs.** Where specified in the contract documents or as directed by the Resident Engineer, tie-downs shall be removed and legally disposed of off-site in a timely fashion after removal. Excavations after removal shall be backfilled with ITEM 153 CLSM up to the bottom of new aggregate base.

d. **Removal of Tie-Downs – Type A.** Where specified in the contract documents or as directed by the Resident Engineer, existing pavement shall be saw-cut, pavement and tie-downs shall be removed and legally disposed of off-site in a timely fashion after removal. Excavations after removal shall be backfilled with ITEM 153 CLSM up to the existing pavement depth. ITEM 153 CLSM shall remain undisturbed for 48 hours prior to placing pavement. ITEM 401 Asphalt Surface Course shall be placed and compacted in 3" maximum lifts to meet the existing surface grade. ITEM 603 Tack Coat shall be used between lifts and coat the saw-cut sides of the existing pavement. Any excavation not immediately backfilled to surface in existing pavement shall be plated and barricaded off until completion of final backfill.

METHOD OF MEASUREMENT

ADD: New section.

101-4.8 REMOVAL OF TIE-DOWNS

The quantity of tie-down removal shall be measured for payment by the number of each tie-down removed by the Contractor as specified, completed and accepted by the Resident Engineer. This price shall be full compensation for all labor, equipment, tools, and incidentals necessary to complete this item in accordance with paragraph 101-3.16d titled REMOVAL OF PIPE AND OTHER BURIED STRUCTURES c. REMOVAL OF TIE-DOWNS.

101-4.9 REMOVAL OF TIE-DOWNS – TYPE A

The quantity of tie-down removal shall be measured for payment by the number of each tie-down removed by the Contractor as specified, completed, and accepted by the Resident Engineer. This price shall be full compensation for all labor, equipment, tools, and incidentals necessary to complete this item in accordance with paragraph 101-3.16d titled REMOVAL OF PIPE AND OTHER BURIED STRUCTURES d. REMOVAL OF TIE-DOWNS.

The saw-cutting, pavement removal, CLSM, bituminous surface course, bituminous tack coat, and additional barricades and plating will not be measured separately for payment but will be considered incidental to REMOVE TIE DOWN – TYPE A, per each.

BASIS OF PAYMENT

101-5.1

ADD:

Payment for "Remove Bituminous Pavement" shall be made at the contract unit price per square yard. This price shall include full compensation for sawing, removal, and disposal of all materials, including furnishing all materials, labor, tools, testing, equipment, and incidentals necessary to complete this item of work.

Payment for "Remove PCC Pavement" shall be made at the contract unit price per square yard. This price shall include full compensation for sawing, removal, and disposal of all materials, including furnishing all materials, labor, tools, testing, equipment, and incidentals necessary to complete this item of work.

Payment for "Remove Tie Down" shall be made at the contract unit price per square yard. This price shall include full compensation for sawing, removal, and disposal of all materials, including furnishing all materials, labor, tools, testing, equipment and incidentals necessary to complete this item of work.

Payment for "Remove Tie Down – Type A" shall be made at the contract unit price per square yard. This price shall include full compensation for sawing, removal, disposal, CLSM, replacement of asphalt materials, compaction, tack coat, including furnishing all materials, labor, tools, testing, equipment, and incidentals necessary to complete this item of work.

Payment will be made under:

ITEM AR401900	**REMOVE BITUMINOUS PAVEMENT – PER SQUARE YARD.**
ITEM AR501900	**REMOVE PCC PAVEMENT – PER SQUARE YARD.**
ITEM AR510900	**REMOVE TIE DOWN – PER EACH.**
ITEM AR510901	**REMOVE TIE DOWN – TYPE A – PER EACH.**

ITEM 152 – EXCAVATION, SUBGRADE AND EMBANKMENT

DESCRIPTION

152-1.1

ADD:

This item shall consist of unclassified excavation of materials for placement of a new pavement structure and the adjustment of filling or cutting of turf shoulders to the lines and grades as depicted in the plans. All topsoil or other fill materials used to adjust the shoulder shall be provided by the Contractor at no additional cost to the contract. The source of the fill materials shall be approved by the Engineer. All material brought to the site shall be documented as uncontaminated in accordance with the Clean Construction or Demolition Debris (CCDD) section below.

All excess material from all contract work shall be hauled offsite at no additional cost to the contract.

152-1.2 DIGITAL TERRAIN MODEL (DTM)

DELETE: This section and replace with the following:

The cross sections and grading information shown in the bid set plans shall be the line and grade for control of the grading work. The Contractor may be provided DTM information to assist with the development of their survey staking and layout model, but this information will not be considered a contract document. The Project Engineer may provide this information after the Contractor has indemnified the Project Engineer from irregularities between the contract documents and the DTM.

152-1.3 CLASSIFICATION

DELETE: Paragraphs b, c, d and e.

ADD:

f. **Topsoil Stripping**. Topsoil stripping shall consist of stripping the existing topsoil from below the proposed embankments or below the proposed airfield, roadway and shoulder pavements. For the purpose of this specification, topsoil shall consist of the material consisting of brush, sods, grass, decayed vegetable matter, or vegetation approximately eight inches (8”) in depth. Topsoil stripping shall be defined as “Unclassified Excavation”.

ADD: New section:

152-1.6 CLEAN CONSTRUCTION OR DEMOLITION DEBRIS

PROJECT CONDITIONS

A. Prior to bidding, the bidder shall make a site visit to become familiar with the current conditions. He shall also determine the accessibility and assess safety measures that will be necessary to perform the contract work.

B. Material Sampling and Analysis:

1. The Contractor shall provide his own sampling and analysis in compliance with applicable laws, prior to offsite disposal of all materials. This cost shall be borne by the Contractor at no additional expense to the Owner.

REGULATORY REQUIREMENTS

A. The Contractor shall comply with all applicable local, state and federal laws and regulations with regard to material removal, handling and disposal, and shall pay all assessed costs and fees.

B. The Contractor shall comply with the Illinois Environmental Protection Act, as amended by Public Act 096-1416 that was signed into law on July 30, 2010, Public Act 097-0137 that was signed into law on July 14, 2011, and all applicable amendments of the Illinois Environmental Protection Act.

SUBMITTALS

A. Contractor shall submit a Clean Construction or Demolition Debris (CCDD) & Soil Removal and Disposal Plan to the Engineer. Submit the following as a minimum:

1. A list of all construction or demolition debris anticipated to be generated requiring disposal.

2. The anticipated quantity (both in tons and in cubic yards) of construction or demolition debris to be disposed of and identification of disposal facility including address and contact information.

3. The anticipated quantity (both in tons and in cubic yards) of surplus soil to be disposed of, and identification of disposal facility including address and contact information.

CCDD testing shall be by the Contractor, as a minimum, the Contractor shall submit the following:

1. Proposed Testing Program to establish that the surplus soil is uncontaminated, for compliance with the requirements of the Illinois Environmental Protection Act. Include details of intended testing program, and rate of sampling (number of samples based on total quantity of surplus soil generated).

2. Credentials of the testing Lab that will perform the testing, and credentials of the Illinois Licensed Professional Engineer or Illinois Licensed Professional Geologist that will complete all required certification forms.

3. Results of the Proposed Testing Program.

4. If further CCDD testing is deemed necessary by the Contractor's chosen disposal facility, the Contractor shall complete this testing at no additional cost to the contract.

GENERAL

A. The following work shall be included:

1. Removal, handling and legal offsite disposal of all construction or demolition debris generated from all contract work, considering it to be clean construction or demolition debris (CCDD).

2. Removal, handling and legal offsite disposal of surplus soil generated from all contract work, considering it to be uncontaminated.

3. Debris and surplus soil disposal shall include any onsite drying of the material as required, so that the material will pass the paint-filter test as per Method 9095B in USEPA's publication SW 846, prior to transportation.

4. Any costs and fees for legally-permitted-facilities accepting clean construction or demolition debris (CCDD), and/or uncontaminated surplus soil.

5. Additional sampling and testing of surplus soil to establish that it is uncontaminated, and certification to that effect by an Illinois Licensed Professional Engineer or an Illinois Licensed Professional Geologist using Form LPC-663, both as required by law and as required by the site accepting the material.

6. Any other applicable work, costs and fees as required by local, state and federal laws.

MATERIAL CHARACTERIZATION FOR OFFSITE DISPOSAL

A. Costs for any and all testing, sampling, laboratory analysis or any other document that is required by the recipient of the material (disposal site) to establish that the material is uncontaminated, shall be borne by the Contractor at no additional expense to the Owner.

CONSTRUCTION METHODS

152-3.1a

REVISE:

Blasting will not be permitted.

152-3.2 EXCAVATION

ADD:

The Contractor shall make provisions in the work to maintain positive drainage from the work areas and to minimize the ponding of water. The Contractor shall cut temporary ditches or swales to maintain positive drainage. At locations where temporary ditches are not feasible, the Contractor shall excavate stormwater storage areas adjacent to but at a lower elevation than the bottom of the work and utilize mechanical pumps to promptly remove stormwater from the excavations.

152-3.6 PREPARATION OF EMBANKMENT AREA

ADD: After the first paragraph:

Prior to placing embankment for new pavements, the topsoil as defined in Section 152-3.15 shall be stripped and stockpiled for future use.

Compressible and/or organic materials shall be removed down to dense material as directed by the Resident Engineer and replaced with suitable embankment material.

Materials excavated during the stripping process shall not be utilized as embankment under the proposed or future pavements.

Materials excavated during the stripping process shall be stockpiled at a location designated by the Contractor and approved by the Resident Engineer outside of the grading limits and allowed to decay and at the Contractor's expense. Upon completion of the earthwork, this material shall be incorporated as directed in Item 905 over the disturbed surface. Excavation, stockpiling and incorporation of this material shall not be measured for payment but shall be considered incidental to Item 152.

152-3.8 FORMATION OF EMBANKMENTS

ADD:

The Contractor shall make provisions in the work to maintain positive drainage from the work areas and to minimize the ponding of water. The Contractor shall cut temporary ditches or swales to maintain positive drainage. At locations where temporary ditches are not feasible, the Contractor shall excavate stormwater storage areas adjacent to but at a lower elevation than the bottom of the work and utilize mechanical pumps to promptly remove stormwater from the excavations.

ADD: After the eighth paragraph:

Compaction control tests for aircraft weights of more than 60,000 pounds (ASTM D1557 – Modified Proctor) shall apply in the areas below proposed airfield pavements.

152-3.15 TOPSOIL

DELETE: 2nd paragraph of this section and REPLACE with the following:

The Contractor shall strip the vegetation from all proposed excavation areas at a minimum depth of 4" and from below all proposed pavement areas at a depth of 4". The stripped organic material shall be temporarily stockpiled outside the grading limits. After the embankment is placed the decomposed vegetative shall be re-spread and disturbed areas shall be prepared for seeding.

In the area directly below the proposed pavement structure, the Contractor shall strip the topsoil and shall store this material on site. Except where noted in the plans, this excavated material shall be replaced with select fill material and compacted to the specifications of Item 152 for Aircraft weighing less than 60,000 lbs.

Materials excavated during the stripping process shall not be utilized as embankment under the proposed or future pavements.

Materials excavated during the stripping process shall be temporarily stockpiled at a location designated by the Contractor and approved by the Resident Engineer outside of the grading limits and allowed to decay. Upon completion of the earthwork, this material shall be incorporated as directed in Item 905 over the disturbed surface. Excavation, stockpiling and incorporation of this material shall not be measured for payment but shall be considered incidental to Item 152.

Any excess excavation material shall be hauled offsite at no additional cost to the contract.

Any topsoil required for shoulder adjustment shall be provided by the Contractor at no additional cost to the contract.

ADD: New section:

152-3.19. DUST CONTROL WATERING

This work shall consist exclusively of applying water to control dust resulting from construction operations and is not intended for use in compaction of earth embankment. The Contractor shall take measures to control dust.

Dust shall be controlled by a uniform application of sprinkled water and shall be applied as directed by the Resident Engineer or Airport, in a manner meeting their approval.

Dust control watering shall not be paid for separately but shall be considered incidental to the item requiring the dust control.

METHOD OF MEASUREMENT

DELETE: Sections 152-4.1 thru 152-4.6.

ADD: The following sections:

152-4.7

Shoulder adjustment measured for payment shall be the number of square yards measured in its final position at the locations shown on the plans or as directed by the Resident Engineer. No measurement for payment will be made for topsoil stripping, spreading, till, pulverize and excavation associated with the shoulder adjustment.

152-4.8

Dust control watering will not be measured for payment but shall be considered incidental to the contract items for which dust control is required.

BASIS OF PAYMENT

152-5.1

ADD:

Payment for "Unclassified Excavation" shall be made at the contract unit price per cubic yard. This price shall be full compensation for excavation of material from its original location and placement in the location of embankment as specified. Excess unclassified material shall be hauled offsite and disposed by the contractor. This price shall be full compensation for furnishing all materials, labor, equipment, tools, and incidentals necessary to complete the item.

Payment will be made at the contract unit price per square yard for "Shoulder Adjustment". This price shall be full compensation for furnishing offsite topsoil, offsite topsoil material testing/documentation as uncontaminated in accordance with CCDD, topsoil stripping, stockpiling and spreading, scarifying or disking existing shoulders excavation and for furnishing all materials, including any fill material required, labor, equipment, tools, and incidentals necessary to complete the item.

Clean Construction or Demolition Debris (CCDD) removal and disposal, topsoil placement, shoulder fill and embankment fill shall not be paid for separately, but shall be included in the unit bid price for "Shoulder Adjustment".

Payment will be made under:

ITEM AR152410 UNCLASSIFIED EXCAVATION – PER CUBIC YARD.
ITEM AR152480 SHOULDER ADJUSTMENT – PER SQUARE YARD.

ITEM 153 – CONTROLLED LOW-STRENGTH MATERIAL (CLSM)

METHOD OF MEASUREMENT

153-5.1

DELETE: This section and replace with the following:

No separate measurement for payment shall be made for controlled low strength material (CLSM). CLSM shall be considered necessary and incidental to the work of this contract.

BASIS OF PAYMENT

153-6.1

REVISE to read:

No payment will be made separately or directly for controlled low strength material (CLSM). CLSM shall be considered necessary and incidental to the work of this contract.

PART 4 – BASE COURSES

ITEM 208 – AGGREGATE BASE COURSE

DESCRIPTION

208-1.1

REVISE: This section to read:

This item shall consist of porous granular embankment composed of coarse aggregate as specified. It shall be constructed on a prepared subgrade underlying course in accordance with these specifications and shall conform to the dimensions and typical cross section and to the lines and grades as shown on the Plans.

This work shall also consist of furnishing and placing porous granular embankment as the field conditions warrant at the time of construction. This material is intended to repair soft subgrade as determined by the Resident Engineer based on results of geotechnical testing and/or proof roll. No adjustment in unit price will be allowed for an increase or decrease in quantities. **Excavation of the soft subgrade shall be not be paid for under Item 208 but shall be paid for under Item 152 Unclassified Excavation.**

MATERIALS

208-2.3 GRADATION REQUIREMENTS

ADD:

Porous Granular Embankment material shall be free from vegetable matter, lumps or clay, and other objectionable or foreign substance.

When submitting materials for consideration, the Contractor shall provide written certification that the material meets the specified requirements. A written gradation shall also be furnished.

Gradation for Porous Granular Embankment shall be an IDOT gradation as follows:

Sieve	Percent Passing	
	RR-1	CS-01
8 inch	-	100
6 inch	-	94-100
4 inch	-	80-100
3 inch	100	-
2 inch	-	20-70
1 ½ inch	30-76	-
No. 4	0-16	0-20

CONSTRUCTION REQUIREMENTS

208-3.1

DELETE: This entire section.

208-3.2

DELETE: This entire section.

208-3.4 PLACEMENT

DELETE: This entire section.

ADD:

The porous granular embankment shall be placed in lifts no greater than one (1) foot thick or as directed by the Resident Engineer.

208-3.5 COMPACTION

DELETE: 2nd sentence, 1st paragraph.

ADD:

Rolling the top of the porous granular embankment material with a vibratory roller meeting the requirements of Section 1101 of the IDOT *Standard Specification for Road and Bridge Construction* should be sufficient to obtain the desired keying, interlocking and necessary compaction. The Resident Engineer shall verify that adequate keying and interlocking has been obtained.

Capping aggregate will not be required when embankment meeting the requirements of Section 209 of the Standard Specifications or granular subbase is placed on top of the porous granular embankment. Capping aggregate (two (2) inch depth) meeting the requirements of Section 209 of the Standard Specifications will be required when embankment meeting the requirements of Section 152 of the Standard Specifications is placed on top of the porous granular embankment.

DELETE: 2nd paragraph.

208-3.9 ACCEPTANCE SAMPLING AND TESTING

DELETE: This entire section.

ADD:

The Resident Engineer shall verify that adequate keying and interlocking has been obtained. The base shall be compacted to the satisfaction of the Resident Engineer.

METHOD OF MEASUREMENT

208-4.1

DELETE: This entire section and replace with:

The quantity of Porous Granular Embankment shall be the number of cubic yards as measured by the Resident Engineer at the specified thickness of the material placed. If required, the thickness of PGE measured for payment will include the thickness of the capping stone.

The porous granular embankment shall be used as shown and as field conditions warrant at the time of construction. No adjustment in unit price will be allowed for an increase or decrease in quantities.

The Contractor shall furnish approved duplicate load tickets upon which is recorded the net weight of the aggregates in each truck. The Contractor shall submit one (1) load ticket to the Resident Engineer, or his/her duly authorized representative, at the job site when the truck load is incorporated into the base.

208-4.2

DELETE: This entire section.

208-4.3

DELETE: This entire section.

BASIS OF PAYMENT

208-5.1

DELETE: This entire section.

ADD:

Porous granular embankment shall be paid for at the contract unit price per cubic yard, of which price shall be full compensation for the two (2) inch capping stone (if necessary), furnishing, spreading, compacting, watering and all incidentals related to equipment, labor and tools necessary to complete this work.

Payment will be made under:

ITEM AR208515 POROUS GRANULAR EMBANKMENT – PER CUBIC YARD.

ITEM 209 – CRUSHED AGGREGATE BASE COURSE

BASIS OF PAYMENT

209-5.1

ADD:

Payment will be made under:

item ar209606 crushed aggregate base course – 6” – per square yard

PART 6 - FLEXIBLE PAVEMENTS

ITEM 401 – ASPHALT MIX PAVEMENT SURFACE COURSE

DESCRIPTION

401-1.1

ADD:

This item shall consist of placing bituminous surface course (per Method 1), placed as part of the proposed pavement structure at the locations shown on the plans.

MATERIALS

401-2.3 ASPHALT BINDER

ADD: The following after the 6th paragraph of this section:

Asphalt Binder Selection Table – IDOT Districts 1-6 (Apron) Aircraft 60,000 pounds Or More criteria shall apply

COMPOSITION

401-3.3 JOB MIX FORMULA (JMF)

ADD: The following after the 6th paragraph of this section:

Asphalt Design Criteria Table - Aircraft 60,000 pounds Or More (Apron) criteria shall apply. Target air voids (AV) shall be 3% for the mixture.

CONSTRUCTION METHODS

401-4.10 JOINTS

ADD:

After the first paragraph of this section.

At any time during the bituminous surface course paving operation it becomes necessary to end a paving lane at a location other than the proposed finished pavement edge because of ending a day's paving, machinery breakdown, etc., the lane end will be sawed back a sufficient distance to provide a smooth, neat appearing joint from which to resume paving. The sawed face will be painted with a liquid asphalt and this work shall be considered incidental to Item 401, Bituminous Surface Course, and no additional compensation will be allowed.

BASIS OF PAYMENT

401-8.1

ADD:

Payment will be made under:

ITEM AR401610 BITUMINOUS SURFACE COURSE – PER TON.

ITEM 403 – ASPHALT MIX PAVEMENT BASE COURSE

DESCRIPTION

403-1.1

ADD:

This item shall consist of placing bituminous base course (per Method 1), placed as part of the proposed pavement structure at the locations shown on the plans.

MATERIALS

403-2.3 ASPHALT BINDER

ADD: The following after the 6th paragraph of this section:

Asphalt Binder Selection Table – IDOT Districts 1-6 (Apron) Aircraft 60,000 pounds Or More criteria shall apply

COMPOSITION

403-3.3 JOB MIX FORMULA (JMF)

ADD: The following after the 6th paragraph of this section:

Asphalt Design Criteria Table - Aircraft 60,000 pounds Or More (Apron) criteria shall apply. Target air voids (AV) shall be 3% for the mixture.

CONSTRUCTION METHODS

403-4.10 JOINTS

ADD:

After the first paragraph of this section.

At any time during the bituminous base course paving operation it becomes necessary to end a paving lane at a location other than the proposed finished pavement edge because of ending a day's paving, machinery breakdown, etc., the lane end will be sawed back a sufficient distance to provide a smooth, neat appearing joint from which to resume paving. The sawed face will be painted with a liquid asphalt and this work shall be considered incidental to Item 403, Bituminous Base Course, and no additional compensation will be allowed.

BASIS OF PAYMENT

403-8.1

ADD:

Payment will be made under:

ITEM AR403610 BITUMINOUS BASE COURSE – PER TON.

PART 7 – RIGID PAVEMENT

ITEM 501 – CEMENT CONCRETE PAVEMENT

DESCRIPTION

501-1.1

ADD:

This work shall consist of 10” concrete pavement.

MATERIALS

501-2.10 STEEL REINFORCEMENT

ADD to paragraph **b.(1)(a) Welded wire reinforcement (non-coated)**:

Reinforcement of odd-shaped panels shall consist of welded wire reinforcement of the size and dimensions shown in the plans and details.

501-2.11 DOWEL AND TIE BARS

ADD to paragraph b. Dowel bar assembly:

All dowel bars shall be fastened firmly in position with an approved contraction joint dowel bar assembly prior to the start of paving operations or mechanically inserted per article 420.05 of the IDOT Standard Specifications for Road and Bridge Construction. Loose dowel bars will not be accepted.

501-2.12 MATERIAL FOR CURING CONCRETE

DELETE: paragraphs (b) and (c).

501-2.13 EPOXY-RESIN

ADD:

All epoxy-resin mortar used for spall repairs shall be a two-component material conforming to the requirements of ASTM C881, Type III. Class as appropriate for each application temperature to be encountered,

CONCRETE MIX

501-3.3 CONCRETE MIX PROPORTIONS

DELETE: All references to aircraft gross weights of 60,000 pounds or less.

ADD:

Concrete pavements will be designed to accommodate aircraft gross weights greater than 60,000 pounds.

The Contractor has the option to transport and cure the beams at an IDOT approved laboratory facility as approved by the Engineer.

CONSTRUCTION METHODS

501-4.2 EQUIPMENT

REVISE: Paragraph **e. Fixed forms** to read:

All radii and tapers shall be formed with flexible forms, made of either metal or wood, and shall be supplied for use on curves of 100-foot radii or less.

501-4.4 BASE SURFACE PREPARATION PRIOR TO PLACEMENT

DELETE: The first sentence.

ADD:

The existing grade along the outer edges of the new pavement shall be improved, if necessary, to support the paver without noticeable displacement. Any grading, compacting, or furnishing and installing materials shall be considered incidental to the unit prices for paving and no separate payment will be made.

All areas shall be constructed true to grade and acceptable to the Engineer prior to paving.

If the underlying course has become over-saturated or unstable, paving operations shall stop until corrected unless otherwise approved by the Engineer.

501-4.10 JOINTS

ADD: To the end of the paragraph **d.(3)(c) Joints in hardened concrete**:

Protection of previously installed pavement edges and joints from slip-form operations shall be provided in the form of rubber mats or other means acceptable to the Engineer. The Contractor shall be required to place rubber mats (or other approved material) along the pavement edge prior to drilling dowel bar holes. In addition, any damage to the pavement caused by the drilling operation shall be repaired to the satisfaction of the Engineer at no additional cost to the contract.

501-4.12 SURFACE TEXTURE

ADD:

The surface of the pavement shall be finished with a burlap drag or other approved method acceptable to the Resident Engineer.

501-4.13 CURING

ADD: To the end of the second paragraph:

Membrane curing method shall be utilized for this project.

For slip-form paving, the approved curing media shall be applied uniformly to all surfaces of the pavement, including exposed edges. Membrane curing compounds shall be applied on all concrete

surfaces from a suitable self-propelled mechanical application device, which bridges the fresh concrete, designed to provide a uniform application. Other curing systems will not be permitted.

Care shall be taken when this method of curing is used. Should conditions prevail such that curing material is being blown toward buildings or aircraft, appropriate measures shall be taken to eliminate the problems to the satisfaction of the Engineer. The curing membrane shall be sprayed as soon as possible without damage to the pavement surface. Excessive delays in application of the membrane resulting in shrinkage cracking will be cause for rejection of the affected pavement necessitating removal and replacement at no additional cost to the contract.

ADD: the following new sections:

501-4.21 REPAIR, REMOVAL OR REPLACEMENT OF SLABS

REVISE: Section **e. Spalls along joints**, paragraph **(2)(e)** as follows:

Fill the cavity with a Grade III epoxy-resin concrete or an IDOT approved R3 mortar only.

ADD:

(h) The epoxy resin materials shall be placed in the cavity in layers not over 2 inches thick. The time interval between placement of additional layers shall be such that the temperature of the epoxy resin material does not exceed 140° F (60° C) at any time during hardening. Any repair material on the surrounding surfaces of the existing concrete shall be removed before it hardens. If any spall penetrates half the depth of the slab or more, the entire slab shall be removed and replaced as previously specified.

BASIS OF PAYMENT

501-8.1 GENERAL

ADD:

Payment will be made under:

ITEM AR501510 10" PCC PAVEMENT – PER SQUARE YARD.
ITEM AR501530 PCC TEST BATCH – PER EACH.

PART 9 – MISCELLANEOUS

ITEM 602 – EMULSIFIED ASPHALT PRIME COAT

DESCRIPTION

602-1.1

ADD:

This item shall consist of placing bituminous prime coat on the proposed aggregate base as part of the proposed pavement structure at the locations shown on the plans.

BASIS OF PAYMENT

602-5.1

ADD:

Payment will be made under:

ITEM AR602510 BITUMINOUS PRIME COAT – PER GALLON.

ITEM 603 – EMULSIFIED ASPHALT TACK COAT

DESCRIPTION

603-1.1

ADD:

This item shall consist of placing bituminous tack coat between lifts of bituminous pavement as part of the proposed pavement structure at the locations shown on the plans.

BASIS OF PAYMENT

603-5.1

ADD:

Payment will be made under:

ITEM AR603510 BITUMINOUS TACK COAT – PER GALLON.

ITEM 605 – JOINT SEALANTS FOR PAVEMENTS

METHOD OF MEASUREMENT

605-4.1

DELETE: This section and replace with the following:

No separate measurement for payment shall be made for joint sealant. Joint sealant shall be considered necessary and incidental to the work of this contract.

BASIS OF PAYMENT

605-5.1

REVISE to read:

No payment will be made separately or directly for joint sealant. Joint sealant shall be considered necessary and incidental to the work of this contract.

ITEM 610 – CONCRETE FOR MISCELLANEOUS STRUCTURES

DESCRIPTION

610-1.1

ADD:

This item shall include concrete used for the purpose of installing new underdrain cleanouts, lights, signs, splice cans, duct banks, and other miscellaneous items that require the use of structural Portland cement concrete.

METHOD OF MEASUREMENT

610-5.1

REVISE to read:

Concrete for miscellaneous structures shall be considered incidental to the contract unit price for the items requiring concrete and no separate measurement or payment will be made. The prices shall be full compensation for furnishing all materials and or preparation, delivering and installation of these materials, and for all labor, equipment, tools and incidentals necessary to complete the item.

ITEM 620 – RUNWAY AND TAXIWAY MARKING

CONSTRUCTION METHODS

620-3.3 PREPARATION OF SURFACES

ADD:

b. Preparation of pavement to remove existing markings. Methods for pavement removal shall be reviewed and approved by the Resident Engineer prior to initiating the pavement removal.

BASIS OF PAYMENT

620-5.1

Payment will be made under:

ITEM AR620900 PAVEMENT MARKING REMOVAL – PER SQUARE FOOT.

PART 11 – DRAINAGE

ITEM 705 – PIPE UNDERDRAINS FOR AIRPORTS

DESCRIPTION

705-1.1

REVISE to read:

This item consists of the construction of pipe underdrains, underdrain cleanouts, removal of pipe underdrains and underdrain cleanouts in accordance with these specifications, at the specified locations and in reasonably close conformity with the lines and grades specified in the contract documents or required by the Resident Engineer.

MATERIALS

705-2.1 GENERAL

DELETE: Paragraphs a, c, and d.

REVISE to read:

b. Type 2. A perforated pipe, encased in fabric, installed in a fabric lined trench backfilled with a course aggregate.

705-2.2 PIPE

DELETE: Paragraphs a and c.

705-2.5 BACKFILL

DELETE: Paragraphs a and c.

705-2.6 FILTER FABRIC

a. Type 1.

REVISE first sentence to read:

The fabric sock for encasing pipe underdrains, Type 1 and Type 2, may be either a knitted, woven, or nonwoven fabric.

705-2.7 CLEANOUT FRAME AND LID

Frame and lid shall be Neenah R-6014 or approved equal, bolted.

705-2.8 REINFORCING STEEL

Reinforcing steel shall meet the requirements of ITEM 610-2.12 Steel Reinforcement.

705-2.9 CONCRETE

Concrete shall meet the requirements of ITEM 610 Concrete for Miscellaneous Structures.

705-2.10 CONCRETE HEADWALL

Concrete headwall shall be precast meeting IDOT Standard 601101-02.

705-2.11 BUY AMERICAN CERTIFICATIONS AND WAIVERS

Due to material availability, a Buy American Waiver Request may be required for the underdrain filter fabric sock. The contractor shall be responsible for providing underdrain components that meet Buy American requirements or are eligible for receiving a waiver.

CONSTRUCTION METHODS

705-3.7 LAYING AND INSTALLING PIPE

ADD:

Trenches shall be lined with the underdrain trench envelope prior to placing any backfill or underdrain. A 2-foot minimum overlap of material is required where breaks in the fabric occur. The underdrain trench envelope shall be folded over the backfilled trench and weighted down with 1-2" of porous backfill.

705-3.7 BACKFILL

DELETE: Paragraph a.

ADD:

d. Removal of Underdrain. Backfilling for voids left by underdrain removal under proposed pavement areas shall consist of ITEM 153 CLSM material placed up to the bottom of the proposed aggregate base. The cost shall be considered incidental the underdrain removal item.

705-3.11 UNDERDRAIN CLEANOUT

This work shall consist of the placement of new underdrain cleanouts at the locations and grades as shown on the plans. After the structure has been completed, it shall be backfilled with approved material. The price shall be full compensation for furnishing all materials and for all preparation, excavation, backfill, fittings, connections of pipe, and for all labor, equipment, tools, and incidentals necessary to complete the item.

705-3.11 UNDERDRAIN & UNDERDRAIN CLEANOUT REMOVAL

This work shall consist of the removal of existing 24" diameter concrete underdrain collection structure, frame/lid and connecting existing underdrain to the limits as shown on the plans or as directed the Resident Engineer. Excavation resulting from structure and underdrain removal shall be backfilled in accordance with section 705-3.7. Existing underdrains shall be capped at the locations as shown on the plans. Costs associated with capping the existing underdrain shall be considered incidental to the underdrain removal. Items removed shall be disposed of off airport property.

705-3.11 CONCRETE HEADWALL

The concrete headwall shall be excavated and placed at the grades as shown on the plans. The price shall be full compensation for furnishing all materials and for all preparation, excavation, backfill, fittings, connections of pipe, and for all labor, equipment, tools, and incidentals necessary to complete the item.

BASIS OF PAYMENT

705-5.1

ADD:

The accepted quantities for concrete headwall, underdrain cleanouts and remove underdrain cleanouts will be paid for at the contract unit price per each, complete and in place. This price shall be full compensation for furnishing all materials and for all preparation, excavation, adjustment, and backfilling to complete the item as shown on the plans and as specified herein.

Payment will be made under:

ITEM AR705526	**6" PERFORATED UNDERDRAIN W/SOCK – PER LINEAR FOOT.**
ITEM AR705610	**CONCRETE HEADWALL FOR UNDERDRAIN – PER EACH.**
ITEM AR705640	**UNDERDRAIN CLEANOUT – PER EACH.**
ITEM AR705900	**REMOVE UNDERDRAIN – PER LINEAR FOOT.**
ITEM AR705904	**REMOVE UNDERDRAIN CLEANOUT – PER EACH.**

PART 12 – TURFING

ITEM 901 – SEEDING

DESCRIPTION

901-1.1

ADD:

Topsoiling shall be per Item 905 Topsoiling and mulching shall be per Item 908 Mulching.

Restoration, seeding and mulching beyond the limits of seeding and mulching shown in the plans (such as access roads, haul roads, staging areas, and storage areas) shall be considered incidental to the contract.

MATERIALS

901-2.2 LIME

DELETE: Entire Section

901-2.3 FERTILIZER

DELETE: The last paragraph and the fertilizer rate table.

ADD:

Fertilizer shall be applied at rates that supply the following amounts of nutrients per acre to the distributed areas of seeding:

NUTRIENTS	POUNDS PER ACRE
Nitrogen Fertilizer Nutrients	90
Phosphorus Fertilizer Nutrients	90
Potassium Fertilizer Nutrients	90
TOTAL	270

The Contractor has the option to perform a soil test, at their expense, to validate that the fertilizer rate specified is suitable for the on-site or plan specified topsoil sources. If the Contractor proposes an alternate mix ratio and weights, the proposal shall be approved by the Engineer. Alternate mix ratio and/or weights shall be at no additional costs to the contract.

CONSTRUCTION METHODS

901-3.2 DRY APPLICATION METHOD

DELETE: Paragraph c. Seeding

ADD:

Grass seed shall be sown at the rate shown in 901-2.1 with a machine that is capable of cutting a slit in the soil free from leaves and debris, placing the seed in the slit and compacting the seed into the soil of the slit in one continuous operation.

The site will be to grade and shaped to the elevations as shown on the plans. The topsoil will be free of clods, stones, roots, sticks, rivulets, gullies, crusting, caking and have a soil particle size of no larger than 1". Seedbed preparation methods shall be approved by the Engineer. Cultivation shall be accomplished at such a time that seeding may occur immediately and without delay. No seeds shall be sown until the Seedbed has been approved by the Engineer.

No seed shall be sown during high winds or when the ground is not in a proper condition for seeding, nor shall any seed be sown until the purity test has been completed for the seeds to be used and shows that the seed meets the noxious weed seed requirements. All equipment shall be approved by the Engineer prior to being used. Prior to starting work, seeders shall be calibrated and adjusted to sow seeds at the required seeding rate. Equipment shall be operated in a manner to ensure complete coverage of the entire area to be seeded. The Engineer shall be notified forty-eight (48) hours prior to beginning the seeding operations.

901-3.3 WET APPLICATION METHOD

DELETE: Entire Section.

BASIS OF PAYMENT

901-5.1

ADD:

Payment will be made under:

ITEM AR901510 SEEDING – PER ACRE.

ITEM 905 – TOPSOIL

DESCRIPTION

905-1.1

ADD:

Topsoil required for shoulder adjustment shall be provided by the Contractor from an offsite source. The Contractor shall notify the Engineer in advance of hauling operations as to the source and quality of the proposed topsoil fill. Material provided shall be certified as clean and uncontaminated in accordance with Item 152 of these Special Provisions.

Topsoil fill shall be incorporated into the existing turf shoulder at the locations shown on the plans or as directed by the Resident Engineer and compacted in accordance with Item 152.

Costs for testing of the proposed topsoil material to show compliance with Section 905-2.1 shall be borne by the Contractor.

METHOD OF MEASURMENT

905-4.1

DELETE: This entire section.

905-4.2

DELETE: This entire section.

ADD: New section.

905-4.3

Topsoil required for shoulder adjustment or site restoration shall not be measured for payment.

BASIS OF PAYMENT

905-5.1

DELETE: This entire section.

ADD:

Topsoil required for shoulder adjustment will not be paid for separately and will be considered included in the costs for Item AR152480, Shoulder Adjustment.

ITEM 908 – MULCHING

DESCRIPTION

908-1.1

ADD:

Restoration, seeding and mulching beyond the limits of seeding and mulching shown in the plans (such as lighting, cabling, access roads, haul roads, staging area, storage area) shall be considered incidental to the contract.

MATERIALS

908-2.1 MULCH MATERIAL

REVISE: First sentence to read:

Material used for mulching shall be (d) Hydraulic Mulch – Heavy Duty.

Chemical Mulch Binder meeting the requirements per Section 1081.06 (a) (3) of the IDOT "Standard Specifications for Road and Bridge Construction", latest edition shall be used as a mulch stabilizer.

CONSTRUCTION

908-3.1 MULCHING

ADD:

Chemical mulch binder shall be mixed and applied per the manufacturer's recommendations.

BASIS OF PAYMENT

908-5.1

ADD:

Chemical mulch binder shall not be paid for separately but shall be included in the unit bid price for mulching.

Payment will be made under:

ITEM AR908515 HEAVY-DUTY HYDRAULIC MULCH – PER ACRE.

APPENDIX A - IDOT DIVISION OF AERONAUTICS POLICY MEMORANDA

State of Illinois Department of Transportation
Office of Intermodal Project Implementation
Aeronautics

POLICY MEMORANDUM

February 10, 2022	Springfield, Illinois	Number 22-1

TO: CONSULTING ENGINEERS / CONTRACTORS

SUBJECT: ACCEPTED CEMENT TYPES

I. This policy memorandum addresses the accepted cement types for use in Items 501 and 610 Concrete mixtures. Type IL cement has been added to the approved list and may be used on all IDOT-Let Aeronautics projects.

II. The following cement types are approved.

a. Type I cement conforming to the requirements of ASTM C 150.

b. Type IL cement conforming to the requirements of ASTM C 595.

c. All other types are not allowed unless specified by Special Provisions.

William C. Eves, P.E.
Acting Chief Engineer

State of Illinois Department of Transportation
Office of Intermodal Project Implementation
Aeronautics

POLICY MEMORANDUM

February 10, 2022	Springfield, Illinois	Number: 22-2

TO: CONSULTING ENGINEERS / CONTRACTORS

SUBJECT: OBTAINING APPROVED AGGREGATES COMPLYING WITH 2020 STANDARD SPECIFICATIONS FOR CONSTRUCTION OF AIRPORTS

I. SCOPE

This Policy Memorandum addresses the additional aggregate quality requirements of the 2020 Illinois Standard Specifications for Construction of Airports, Special Provisions, and policies of IDOT Aeronautics. The airport quality requirements exceed those normally expected for similar IDOT highways pay items.

II. REQUIREMENTS

The contractor shall use these procedures to demonstrate aggregate compliance with the contract requirements.

A. Contractor Responsibility

1.) For Item 208 Aggregate Base and Item 209 Crushed Aggregate Base, the Contractor shall use aggregates with test requirements conforming to 2020 Standard Specifications for Construction of Airports, Coarse Aggregate Quality table, Section 208-2.2 and Section 209-2.2. Note: Item 208 and 209 Airport aggregates require B Quality coarse aggregates instead of the IDOT Highways allowed D Quality.

a) Na2SO4 Soundness 5 Cycle, Illinois Modified AASHTO T 104, maximum percent loss = 15%.

b) Los Angeles Abrasion, Illinois Modified AASHTO 96, maximum percent loss = 40%.

c) Deleterious Materials, Illinois Testing Procedure 203, Deleterious Particles in Coarse Aggregate.
   i. Shale, 2.0% maximum.
   ii. Clay Lumps, 0.5% maximum.

iii. Soft & Unsound Fragments, 6.0 % maximum.
iv. Other Deleterious, 2.0% maximum.
v. Total Deleterious, 6.0% maximum.

2.) For Item 401 HMA Mixtures, the Contractor shall use aggregates with quality testing requirements conforming to 2020 Standard Specifications for Construction of Airports, Coarse Aggregate Quality table, Section 401-2.1a(2) and Fine Aggregate Quality table, Section 401-2.1b(2). Note: Airport HMA mixtures require A Quality coarse and fine aggregates instead of the IDOT Highways allowed B Quality.

a) Deleterious Materials, Illinois Testing Procedure 203, Deleterious Particles in Coarse Aggregate.
   i. Shale, 1% max.
   ii. Clay Lumps, 0.25% max
   iii. Coal & Lignite, 0.25% max
   iv. Soft & Unsound Fragments, 4.0 % max
   v. Other Deleterious, 4.0% max
   vi. Total Deleterious, 5.0% max

3.) For Item 501 PCC Mixtures, the Contractor shall use aggregates with quality testing requirements conforming to 2020 Standard Specifications for Construction of Airports, Coarse Aggregate Quality table, Section 501-2.3(b). It is noted that this A Quality table has been modified from the current IDOT Highways A Quality requirements. Aggregate testing procedures and acceptance are as follows.

a) Total Deleterious Maximum % = 2.6% conforming to Illinois Testing Procedure 203 Deleterious Particles in Coarse Aggregate (ITP 203).

b) Maximum Deleterious Chert % = 0.1% conforming to Illinois Modified AASHTO T 113, Standard Method of Test for Lightweight Pieces in Aggregate.

4.) Obtaining aggregates conforming to the requirements of the 2020 Standard Specifications for Construction of Airports.

a) First, check with your aggregate source(s) to see if their product recently passed Aeronautics requirements. It is possible the aggregate source in questions has met the Aeronautics requirements, but the IDOT Bureau of Materials does not have the Aeronautics-approved product listed. For example: the B Quality aggregate 031CM16 at a particular source has been confirmed to also meet A Quality. Check with your aggregate source to confirm aggregate quality to be used in the above pay items. Check with IDOT Aeronautics for previously approved sources.
b) If the aggregate source does not have recent tests to show it meets Aeronautics requirements, the Contractor shall ask the aggregate source to request the IDOT District Materials Engineer to test the aggregate for the required parameters.
c) If the IDOT District is unable to perform the requested test(s) or the IDOT District schedule is not compatible with the Contractor's timetable, the Contractor shall have the aggregate tested by a third-party testing laboratory. The third-party laboratory shall be IDOT-approved or AASHTO-approved. AASHTO approval consists of accreditation in accordance with AASHTO Materials Reference Laboratory (AMRL).

d) Additional expense incurred by the Contractor for third-party testing may be approved for payment by a Change Authorization in the amount of the actual testing cost. Confirm with the Aeronautics Materials & Certifications Engineer to get prior approval for testing expenses.

e) Aeronautics will maintain a database of approved sources and third-party tested aggregates that conform to the requirements of the 2020 Specifications.

5) Frequency of Testing. Test results for aggregate products from the same ledge, processed using the same method and equipment, shall be considered to meet the Aeronautics requirements for 1 year from the testing date. IDOT Aeronautics reserves the right to re-test aggregates to confirm compliance.

William C. Eves, P.E.
Acting Chief Engineer

State of Illinois
Department of Transportation
Division of Aeronautics

POLICY MEMORANDUM

February 20, 2014	Springfield	Number: 87-2

TO: CONSULTING ENGINEERS

SUBJECT: DENSITY ACCEPTANCE OF BITUMINOUS PAVEMENTS

I. Introduction

This Policy Memorandum deals with the implementation of the bituminous density quality assurance specifications as outlined in the Standard Specifications for Construction of Airports, Sections 401-4.15 and 403-4.15.

II. Sampling

After completion of compaction and when the pavement has reached ambient temperature, the paved area shall be divided into Sublots of 500 tons per type of mix. One core sample (2 cores per sample) shall be taken from each Sublot. The longitudinal and transverse location for each sample shall be determined by use of a random number "Deck" provided by the Division. No core shall be taken closer than two (2) feet from the edge of the mat. A core extraction device shall be used to obtain all cores from the mat. All cores are to be taken by the contractor under the supervision and remain in the possession of the Engineer. It is imperative that the Engineer and the contractor realize that the cores are "money" and that improper coring, extraction, shipping and/or testing can be costly.

One mix sample per 1000 tons of mix laid shall be taken for Extraction, Maximum Specific Gravity (G_{mm}) and Air Void tests. The mix samples shall be sampled by the contractor and split in half.

The Resident Engineer shall randomly designate and send the split samples to an independent laboratory for testing. The laboratory will be verified to be ASTM- certified for all the required testing and be contracted through the Consultant. The frequency of testing split samples shall be 1 per 5000 tons. Higher frequencies may be necessary if the contractor’s tests, and/or mix quality control are inconsistent.

III. Testing

All cores shall be tested for Bulk Specific Gravity (G_{mb}) in accordance with ASTM D2726 using Procedure 10.1, "For Specimens That Contain Moisture." The Theoretical Maximum Gravity (G_{mm}) shall be determined according to ASTM D2041. From these tests the in-place air voids of the compacted pavement are calculated according to ASTM

D3203 for "dense bituminous paving mixtures." Selection of the proper G_{mm} shall be based on a running average of four (4) tests per Lot.

E.g. Lot 1 - Use the average of the two (2) tests for Lot 1.
Lot 2 - Use the average of the four (4) tests from Lots 1 and 2.
Lot 3 - Use the average of the four (4) tests from Lots 2 and 3.

NOTE: When more than four (4) Sublots are used, still use a running average of four (4) tests per Lot.

IV. Acceptance Calculations

The first step in calculating the quantities for pay is to calculate the Mean ($\overline{X}$) and the Standard Deviation (S) of the Sublot tests. From this data the Lot samples should first be tested for outliers. After consideration for outliers, the Percent Within Tolerance (PWT) and the Percent Within Limits (PWL) are calculated to determine the final pay quantities for the Lot.

EXAMPLE

1. Test Data

Lot Quantity = 2000 tons
Sublot Test 1 = 4.35 % Air Voids
Sublot Test 2 = 3.96 % Air Voids
Sublot Test 3 = 6.75 % Air Voids
Sublot Test 4 = 6.25 % Air Voids

2. Calculating the Mean and Standard Deviation

Sublot	X	$(X - \overline{X})$	$(X - \overline{X})^2$
1	4.35	-0.978	0.956
2	3.96	-1.368	1.871
3	6.75	1.422	2.022
4	6.25	0.922	0.850
Sum =	21.31		5.699

N = 4

Mean $(\overline{X})$ = 21.34 / 4 = 5.328

Variance $(S)^2 = \text{Sum}\ \frac{(X - \overline{X})^2}{3} = \frac{5.699}{3} = 1.900$

Standard Deviation S = $\sqrt{1.900}$ = 1.378

3. Test for Outliers

Check for Critical "T" Values

$$T = \left|\frac{(X_1 - \overline{X})}{S}\right|^* = \left|\frac{3.96 - 5.328}{1.378}\right| = 0.99$$

* Difference between the suspect test value (X_1) and the Mean ($\overline{X}$).

If the T value exceeds the critical "T" Value in the table below and no assignable cause can be determined for the outlier, discard the suspected test measurement and obtain another random sample from the Sublot in question. If the new test exceeds the Mean ($\bar{X}$) in the same direction from the Mean as the suspected test, recalculate the T value including all tests (original test, suspected test, and new test) for an outlier and for computing final payment.

TABLE OF CRITICAL "T" VALUES

Number of observations (N)	Critical "T" Value 5% Significance Level
3	1.15
4	1.46
5	1.67
6	1.82
7	1.94
8	2.03
9	2.11
10	2.18
11	2.23
12	2.29

Based on the above table, the "T" value of 0.99 does not exceed the Critical "T" Value of 1.46 for N = 4. Therefore, the value (3.96) is not an outlier and shall be used in calculating the Lot payment.

4. Calculation of Lot Payment

To calculate the Lot Payment use the Acceptance Criteria as outlined under Item 401-4.15(c) or Item 403-4.15(c).

$$Q_L = \frac{(\bar{X} - 1)}{S} = \frac{5.328 - 1}{1.378} = 3.141$$

$$Q_u = \frac{(7 - \bar{X})}{S} = \frac{7 - 5.328}{1.378} = 1.213$$

From this data the Percentage Within Tolerance (PWT) for both the lower and upper tolerance limits is determined by Table 6 (see Item 401 Bituminous Surface Course and/or Item 403 Bituminous Base Course in the Standard Specifications) for the number (N) of samples tested.

Eq. PWT (lower) = 99.0%
PWT (upper) = 90.4%

We now calculate the Percent Within Limits (PWL) for the Lot.

PWL = [PWT (lower)] + [PWT (upper)] - 100
PWL = (99.0 + 90.4) - 100 = 89.4%

Using Table 5, the % Adjustment in Lot Quantity is:

% Adjustment = 0.5 PWL + 55.0
% Adjustment = 0.5 (89.4) + 55.0
% Adjustment = 99.7

Adjusted Quantities = % Adjustment x Lot Quantities
Adjusted Quantities = 0.997 x 2000 tons
Adjusted Quantities = 1994 tons

5. Resampling and Retesting

The contractor has the right to request the resampling and retesting of a complete Lot. This privilege is only allowed once for each Lot and must be requested in writing by the contractor within 48 hours of receiving the official report from the Engineer.

6. Reporting

After completion of the tests for each Lot, the Engineer shall complete the necessary calculations for final adjustment in quantities on the Form AER-1 and have both the Engineer and the Contractor sign the report for copying to both the FAA and IDOA.

Steven J. Long, P.E. Acting Chief Engineer

Supersedes Policy Memorandum 87-2, dated April 1, 2010

State of Illinois
Department of Transportation
Division of Aeronautics

POLICY MEMORANDUM

December 3, 2020 | Springfield | Number: **87-3**

TO: CONSULTING ENGINEERS & CONTRACTORS

SUBJECT: MIX DESIGN, TEST BATCH, QUALITY CONTROL, AND ACCEPTANCE TESTING OF PCC PAVEMENT MIXTURE

I. SCOPE

This Policy Memorandum addresses the Mix Design, Test Batch, Quality Control and Acceptance Testing of PCC pavement mixtures specified by Item 501, Portland Cement Concrete Pavement, in accordance with the Standard Specifications for Construction of Airports, Special Provisions, and policies of the Division of Aeronautics.

II. MIX DESIGN

Prior to the start of paving operations and after approval by the Division of Aeronautics (IDA) of all materials to be used in the manufacture of the concrete, the contractor shall provide a preliminary mix design(s) for evaluation at the Test Batch. The mix design shall indicate saturated surface dry batch weights per cubic yard for each material component. In addition, each material component, including chemical admixtures, shall be identified by the IDOT material code number, the IDOT producer code number, and the producer name and location. Saturated surface dry and oven dry specific gravities, as well as absorption values, for each proposed aggregate to be used in the mix shall be indicated on the mix design.

The Mix Design and the contractor's approved Job Mix Formula (JMF) will be issued by our office subject to verification of the mix by strength tests obtained from mix prepared from a Test Batch(es) according to the approved JMF. The water-cementitious ratio established from the approved test batch is the maximum water-cementitious ratio allowed during production paving.

III. TEST BATCH

At least 28 days prior to the start of production, the contractor and/or producer shall prepare a Test Batch under the direction of the Engineer. The Test Batch shall be prepared at the concrete plant proposed for use in the production of the concrete mix for

the project and shall be in accordance with the approved Job Mix Formula (JMF). When approved by the Engineer, the Test Batch may be prepared at a different plant provided that the same materials specified in the JMF are used. The plant shall have been surveyed and approved by the Engineer prior to preparation of the Test Batch. As required by these Special Provisions, the contractor shall provide Quality Control for production of the concrete. The contractor shall have his Quality Control Manager and a representative of the contractor familiar with the paving operation, present at the Test Batch preparation. The Test Batch shall be prepared as follows:

A. Proportioning

Prior to preparation of the mix, the Proportioning Technician shall perform a minimum of two (2) gradation analysis and two (2) moisture tests on each aggregate used. The gradation analysis shall be reported on form AER-12. From this data, the JMF shall be adjusted for moisture, in accordance with form AER-12. A microwave type moisture probe (or equal) may be allowed to adjust proportions for sand moisture when approved by the Engineer.

B. Preparation of the Mix:

1.) Prepare a Test Batch that is at least one-half (1/2) the manufacturer's rated capacity of the mixing drum (in cubic yards). The Test Batch shall be prepared with the approved JMF, adjusted for moisture.

2.) Mixing requirements shall be:

a.) Central Mix Plant: Mixing time shall be a minimum of 90 seconds. If transit mixer trucks are used to transport the mix, the mix shall be agitated, after mixing, at 2-5 RPM for the approximate time anticipated between batching at the plant and deposit of the concrete in the forms. If non-mixing trucks are used to transport the mix, the mix shall remain in the central mixer with no mixing or agitation for the approximate time anticipated from when the water contacts the cement and deposit of the concrete in the forms.

b.) Transit Mix Plant: Allowed for projects ≤5000 CY. Mixing shall consist of 70-100 Revolutions @ 5-16 RPM. After initial mixing, agitate mix at 2-5 RPM for the approximate time anticipated between batching at the plant and deposit of the concrete in the forms.

3.) Slump and Air: If the air content after aging is 6.0% ±1.5% and provides the required workability for paving, the contractor will make cylinders and/or beams for testing at 3, 7, 14 and 28 days. If the slump is below that required for placement, the contractor may add additional water to increase the slump as necessary up to the maximum water/cement ratio (or water/cementitous material) ratio listed herein. Additional mixing of at least 40 Revolutions will be required with each addition of water. Cylinders and/or beams will be made for testing at 3, 7, 14 and 28 days when the slump is obtained, at 6.0% ±1.5% air content. The water/cement ratio (or water/cementitious material) ratio shall be according to the Standard Specifications, Section 501-4.1, b, (3).

4.) The Proportioning Technician shall complete Form AER-15, PCC Testing Summary and Form AER-6, Concrete Moisture Determination (Adjusted Oven Dry Method), to be given to the Resident Engineer after completion of the Test Batch. The Flask Method, Dunagan Method, and Pycnometer Jar Method (Form AER 19) are also acceptable test methods for the determination of aggregate moisture.

5.) The Resident Engineer and contractor shall each independently complete Form AER-4, Concrete Plant Production, Mix Verification.

6.) The concrete test cylinders and/or beams shall be tested at 3, 7, 14 and 28 days to establish a growth curve of concrete strength vs. age. The compressive strength shall be at least 400 psi, over the specified strength, at 28 days. Flexural strength concrete shall have at least 100 psi over the specified strength at 28 days.

IV. QUALITY CONTROL

Quality control testing is the responsibility of the contractor and must be performed by qualified testing personnel approved by the Engineer. The proportioning technician shall be PCC Level II certified and must perform his or her duties on a full-time basis whenever concrete is produced for an IDA project.

If a QC or QA test for slump, air content, or mix temperature meets or exceeds the Suspension Limits of the Standard Specifications, section 501-5.4, Control Chart Limits the contractor shall reject the batch. In the case of a failing test, the contractor shall take corrective action according to the Standard Specifications, section 501-5.5. Adjustments are subject to the time limitations of 1 hour from time of batching when the concrete is transported in mixer trucks. Time limitations shall be increased by 30 minutes when the concrete mixture contains a retarding admixture. When concrete has been rejected due to failing test results, the contractor shall continue to run tests for the failed test parameter until at least 3 consecutive passing tests are achieved. This testing is in addition to the normal QC and QA testing.

A. Duties of the Proportioning Technician:

1.) Check and maintain shipment tickets of each material used in the manufacture of the concrete. These tickets are to be given to the Resident Engineer for each day's production of concrete. The aggregates shall indicate the quality on the ticket and a statement that the coarse aggregate is a non “D” cracking (freeze-thaw rated by IDOT) aggregate. In lieu of having these statements on each ticket, the contractor may use Form AER-18, Aggregate Certification of Compliance.

2.) Inspect and maintain proper storage of all aggregates and materials daily.

3.) Perform at least two (2) sieve analysis for each aggregate daily.

4.) Inspect all weighing or measuring devices daily.

5.) Twice daily check the actual weighing or measuring of aggregates, cement, water, and admixtures for conformance to adjusted batch proportions. Record data on Form AER-4, Concrete Plant Production, Mix Verification, and calculate the water/cement (or water/cementitious material) ratio.

6.) See that the volume of the batch does not exceed the allowable capacity of the mixer and that the proper mixing time is used.

7.) Make at least two (2) moisture tests of each aggregate daily and correct batch weights as required.

8.) Adjust the dosage rates of the admixtures as required to meet concrete temperature changes and paving conditions.

9.) Complete AER-15, PCC Testing Summary, and Form AER-4, Concrete Plant Production, Mix Verification for each day's production and deliver same to the Resident Engineer at the end of the day for which the data pertains. Provide to the Resident Engineer load tickets for all aggregates, cement, and admixtures used in the mix.

The Resident Engineer will also be required to complete Form AER-4, Concrete Plant Production, Mix Verification. Forms AER-4, AER-12, and AER-15 shall be submitted to the R.E. on a daily basis.

V. ACCEPTANCE TESTING

Acceptance testing shall be according to the Standard Specifications, section 501-6.1-6.6.

As required by Item 501-6.3 of the Standard Specifications, acceptance and payment of the final pavement is based on the strength of either cylinders or beams taken at random during the time of construction. The pavement shall be divided into Lots of 1200 cubic yards with sublots of 300 cubic yards each. The final sublot of the project shall be separated into an additional sublot if the concrete quantity is greater than or equal to 150.0 cubic yards. Otherwise, this remaining quantity shall be incorporated into the previous sublot.

Lots and sublots shall not be separated by mix design or day of paving if the project is using more than one mix design. The grouping of Lots and sublots is to be done solely by the quantity of cubic yards poured on the project.

One random sample (two cylinders or two beams) shall be obtained from each sublot for testing at 28 days to calculate final payment. At the time a sublot sample is taken, one (1) slump, one (1) air test and one (1) temperature check shall be taken.

The above-mentioned tests including Test Batch results will be reported by the R.E. on the AER 15, PCC Testing Summary, and submitted to IDA when updated.

In addition to the above described sample frequency, three (3), seven (7) and fourteen (14) day tests. The Engineer may require additional tests to maintain Quality Control.

Alan D. Mlacnik, P.E.
Bureau Chief of Airport Engineering

Supersedes Policy Memorandum 87-3, dated April 1, 2010

State of Illinois
Department of Transportation
Division of Aeronautics

POLICY MEMORANDUM

December 3, 2020 | Springfield | Number: **87-4**

TO: CONSULTING ENGINEERS

SUBJECT: DETERMINATION OF BULK SPECIFIC GRAVITY (d) OF COMPACTED BITUMINOUS MIXES

A. SCOPE. This method of test covers the determination of the bulk specific gravity and the percent air, of core samples from compacted bituminous mixtures using a saturated surface-dry procedure.

B. DEFINITIONS.

1. Bulk Specific Gravity (G_{mb}) ASTM 2726 or density is the weight per unit volume (gms/cc) of a mixture in its existing state of consolidation. The volume measurement for this specific gravity will include the volume of all the aggregate, asphalt, and air spaces (voids) in the aggregate particles and between the aggregate particles.

2. Theoretical Maximum Specific Gravity (G_{mm}) ASTM 2041 is the weight per unit volume (grams/cc) of a mixture assuming complete consolidation; i.e., all the air spaces (voids) between the aggregate particles are eliminated.

3. Percent Density is a measure of the degree of compaction in relation to the Theoretical Maximum Specific Gravity.

4. Percent Air is a measure of the air voids in the compacted pavement.

C. APPARATUS.

1. Balance - The balance shall be accurate to 0.1 gm throughout the operating range. It may be mechanical or electrical and shall be equipped with a suitable suspension apparatus and holder to permit weighing of the core in water while suspended from the balance. If the balance is a beam type, it shall be set up so that the core is placed in the basket that is suspended from the zero (0) end of the balance arm.

2. Water bath - The container for immersing the core in water while suspended from the balance shall be equipped with an overflow outlet for maintaining a constant water level. This water bath should be large enough to handle full-depth cores. When testing several cores at the same time, a dish-pan, sink or suitable container may be used for soaking.

D. PROCEDURE.

1. Prior to testing, cores shall be sorted on a flat surface in a cool place. The sample(s) shall be brushed with a wire brush and/or other suitable means, to remove all loose and/or foreign materials, such as seal coat, tack coat, foundation material, soil, paper and foil prior to testing.

2. If a core contains binder and surface or multiple lifts, the lifts shall be separated. This may be done in the following manner:

   a. Mark the separation line between the two lifts.

   b. Place the core in a freezer for 20-25 minutes.

   c. Place a 2 or 3-inch wide chisel on the separation line and tap with a hammer. Rotate the core and continue this process until the core separates. Brush loose pieces with a wire brush if needed.

   d. Allow 2-3 hours for the core to return to ambient temperature before proceeding.

3. Prepare the water baths for soaking and weighing with water at 77° F. Water baths should be maintained at this temperature throughout testing. Saturate the cores by submerging in the water for a minimum of 20 minutes.

4. With the balance and water bath properly assembled and zeroed, suspend the sample from the balance and submerge it in the water bath. The core must be placed with the original top and bottom in a <u>vertical</u> position. If necessary, add sufficient water to bring the water level up to the overflow outlet. Permit any excess to overflow. Read and record the Saturated Submerged Weight. Designate this weight as (C).

5. Remove the core from the water bath and blot the excess water from the surface of the core with an absorbent cloth or other suitable material. This must be done quickly to prevent the internal water from escaping.

6. Place the core on the balance and read and record the Saturated Surface-dry Weight in air. Designate this weight as (B).

7. Place the core in a tared pan and dry in an oven. When the core is dry (less than 0.5 gm loss in one hour), record the weight and subtract the pan weight. Designate this weight as (A).

8. The following calculation is used to determine the Bulk Specific Gravity of the core.

$$G_{mb} = \frac{A}{B - C}$$

G_{mb} = Bulk Specific Gravity
A = Oven dry weight
B = Saturated surface-dry weight
C = Saturated submerged weight

E. PERCENT DENSITY. The following calculation is used to determine the percent density of the core:

$$\% \text{ Density} = 100 \times \frac{G_{mb}}{G_{mm}}$$

G_{mb} = Bulk Specific Gravity
G_{mm} = Theoretical Maximum Gravity*

Note: The Theoretical Maximum Gravity (G_{mm}) is determined from the mix design until current Vacuum Pycnometer test are available.

F. PERCENT AIR. To calculate the percent air, use the following formula:

% Air = 100 - % Density

G. WEIGHT PER SQUARE YARD OF COMPACTED MIXTURE. The actual weight per square yard of a compacted mixture can be calculated by using the Bulk Specific Gravity (G_{mb}). The volume of a square yard of pavement <u>one (1) inch</u> thick is 0.75 cubic foot. Taking the weight of a cubic foot of water as 62.37 pounds, one square yard of compacted material, <u>one (1) inch</u> thick weighs:

Pounds / Sq. Yd. (1" thick) = $0.75 \times 62.37 \times G_{mb}$

Alan D. Mlacnik, P.E.
Bureau Chief of Airport Engineering

Supersedes Policy Memorandum 87-4, dated February 20, 2014

State of Illinois
Department of Transportation
Division of Aeronautics

POLICY MEMORANDUM

March 28, 2022	Springfield	Number 96-1A

TO: CONSULTING ENGINEERS

SUBJECT: FOR AERONAUTICS 2020 STANDARD SPECIFICATIONS, ITEM 610, STRUCTURAL PORTLAND CEMENT CONCRETE: JOB MIX FORMULA APPROVAL & PRODUCTION TESTING.

I. This policy memorandum addresses the Job Mix Formula (JMF) approval process and production testing requirements when Item 610 is specified for an airport construction contract.

II. PROCESS

a. The contractor may submit a mix design with recent substantiating test data, or he may submit a mix design generated by the Illinois Division of Highways with recent substantiating test data for approval consideration. The mix design should be submitted to the Resident Engineer. An Item 501 PCC Pavement mix can be used in lieu of a Class SI mix, with the approval of the Division.

b. The Resident Engineer should verify that each component of the proposed mix meets the requirements set forth under Item 610 of the *2020 Standard Specifications for Construction of Airports* and/or the contract special provisions.

c. The mix design should also indicate the following information:

1. The name, address, and producer/supplier number for the concrete.
2. The source, producer/supplier number, gradation, quality, and SSD weight for the proposed coarse and fine aggregates.
3. The source, producer/supplier number, type, and weight of the proposed flyash and/or cement.
4. The source, producer/supplier number, dosage rate or dosage of all admixtures.

d. After completion of Items b and c above, the mix with substantiating test data shall be forwarded to the Division of Aeronautics for approval. Once the mix has been approved, the production testing shall be at the rate in Section III as specified herein.

III. PRODUCTION TESTING

a. When directed by the Resident Engineer, the Contractor shall make, cure and store one set of cylinders in accordance with AASHTO T23 for acceptance testing for each day the mix is used. In addition, at least one slump, one mix temperature, and one air test shall be conducted for each day the mix is used.

b. The concrete shall have a maximum slump of four inches (4”) and minimum slump of two inches (2”) when tested in accordance with AASHTO T119.

c. The air content of the concrete shall be between 5% and 8% by volume when tested in accordance with AAHSTO T152.

d. At no time shall the temperature of the concrete exceed 90 degrees Fahrenheit.

e. Acceptance testing for concrete provided under this item shall have a 14-day compressive strength of not less than 3,500 psi when tested in accordance with AASHTO T22. The testing lab shall be IDOT or AASHTO approved. The Resident Engineer will be responsible for the strength tests on the specimens at no expense to the contractor.

f. If more than 100 cubic yards of the mix is placed in a given day, additional tests at a frequency of 1 per 100 cubic yards shall be taken for strength, slump, mix temperature, and air.

g. The Resident Engineer shall collect actual batch weight tickets for every batch of Item 610 concrete used for the project. The actual batch weight tickets shall be kept with the project records and shall be available upon request of the Department of Transportation.

William C. Eves, P.E.
Acting Chief Engineer

Supersedes Policy Memorandum 96-1 (2020) dated December 3, 2020

State of Illinois
Department of Transportation
Division of Aeronautics

POLICY MEMORANDUM

December 3, 2020	Springfield, Illinois	Number 96-3

TO: CONSULTING ENGINEERS

SUBJECT: REQUIREMENTS FOR QUALITY ASSURANCE ON PROJECTS WITH BITUMINOUS CONCRETE PAVING

I. SCOPE

The purpose of this policy memorandum is to define to the Consulting Engineer the requirements concerning Quality Assurance on bituminous concrete paving projects. Specifically, this memo applies whenever the Contractor is required to comply with the requirements set forth in Policy Memorandum 2003-1, "*Requirements for Laboratory, Testing, Quality Control, and Paving of Bituminous Concrete Mixtures*".

II. LABORATORY APPROVAL

The Resident Engineer shall review and approve the Contractor's plant laboratory to assure that it meets the requirements set forth in the contract specifications and Policy Memorandum 2003-1. This review and approval shall be completed prior to utilization of the plant for the production of any mix.

III. QUALITY ASSURANCE DURING PRODUCTION PAVING

A. The R.E. shall perform sample tests at a rate of 1/5000 tons randomly selected by the R.E. and shall be sent with an identification sheet (Form AER 24, Sample Identification) to an ASTM certified independent laboratory. designated by the Division of Aeronautics. If the project is < 5000 tons, 1 sample selected randomly shall be sent.

Sample preparation, sample size and number of samples shall be according to Policy Memorandum, "*HMA Comparison Samples*".

B. At the option of the Engineer, additional independent assurance tests may be performed on split samples taken by the Contractor for Quality Control testing. In addition, the Resident Engineer shall witness the sampling and splitting of these samples at the start of production and as needed throughout mix production. The Engineer may select any or all split samples for assurance testing. These tests may be performed at any time after sampling. The test results will be made available to the Contractor as soon as they become available.

C. The Resident Engineer may witness the sampling and testing being performed by the Contractor. If the Resident Engineer determines that the sampling and Quality Control tests are not being performed according to the applicable test procedures, the Engineer may stop production until corrective action is taken. The Resident Engineer will promptly notify the Contractor, both verbally and in writing, of observed deficiencies. The Resident Engineer will document all witnessed samples and tests. The Resident Engineer may elect to obtain samples for testing, separate from the Contractor's Quality Control process, to verify specification compliance.

1. Differences between the Contractor's and the Engineer's split sample test results will be considered acceptable if within the following limits:

Test Parameter	Acceptable Limits of Precision
% Passing	
1/2 in.	5.0 %
No. 4	5.0 %
No. 8	3.0 %
No. 30	2.0 %
No. 200	2.2 %
Asphalt Content	0.3 %
Maximum Specific Gravity (G_{mm}) of Mixture	0.026
Bulk Specific Gravity (G_{mb}) of Gyratory Brix	0.045

2. In the event a comparison of the required plant test results is outside the above acceptable limits of precision, split or independent samples fail the control limits, an extraction indicates non-specification mix, or a continual trend of difference between Contractor and Engineer test results is identified, the Engineer will immediately investigate. The Engineer may suspend production while the investigation is in progress. The investigation may include testing by the Engineer of any remaining split samples or a comparison of split sample test results on the mix currently being produced. The investigation may also include review and observation of the Contractor's technician performance, testing procedure, and equipment. If a problem is identified with the mix, the Contractor shall take immediate corrective action. After corrective action, both the Contractor and the Engineer shall immediately resample and retest.

C. The Contractor shall be responsible for documenting all observations, records of inspection, adjustments to the mixture, test results, retest results, and corrective actions in a bound hardback field book or bound diary which will become the property of IDA upon completion and acceptance of the project. The Contractor shall be responsible for the maintenance of all permanent records whether obtained by the Contractor, the Contractor's Consultants, or the producer of bituminous mix material. The Contractor shall provide the Engineer full access to all documentation throughout the progress of the work.

Results of adjustments to mixture production and tests shall be recorded in duplicate and sent to the Engineer.

IV. ACCEPTANCE BY ENGINEER

Density acceptance shall be performed according to the Standard Specifications for Construction of Airports, section 401-6.1 or according to the acceptance procedure outlined in the Special Provisions.

Alan D. Mlacnik, P.E.
Bureau Chief of Airport Engineering

Supersedes Policy Memorandum 96-3, dated February 20, 2014

State of Illinois
Department of Transportation
Division of Aeronautics

POLICY MEMORANDUM

December 3, 2020	Springfield, Illinois	Number: 2001-1

TO: CONTRACTORS

SUBJECT: REQUIREMENTS FOR COLD WEATHER CONCRETING

I. PURPOSE

A. This policy memorandum outlines the minimum requirements for cold weather concreting. Cold weather is defined as whenever the average ambient air temperature during day or night drops below 40 F.

II. COLD WEATHER CONCRETING PLAN

A. The contractor shall submit a cold weather concreting plan to the Engineer for approval. Cold weather concreting operations are not allowed to proceed until the contractor's cold weather concreting plan has been approved by the Engineer.

B. The contractor's plan shall comply with this memorandum and shall address, as a minimum, the following:

1. Concrete Mix Manufacturing
2. Concrete Mix Temperature Monitoring
3. Base Preparation
4. Concrete Curing and Protection
5. In Place Concrete Temperature Monitoring
6. Strength Test Specimens

III. MINIMUM REQUIREMENTS

A. Concrete Mix Manufacturing

1. The contractor must make the necessary adjustments so that the concrete temperature is maintained from 50 F to 90 F for placement. Acceptable methods include:

a) <u>Heating the mixing water</u> Note: If the mixing water is to be heated to a temperature above 100 F, the contractor must include a mixing sequence plan to indicate the order that each component of the mix is to be charged into the mixer.

b) Heating the aggregates Note: The exact method of heating the aggregates shall be included as part of the cold weather concreting plan. Aggregates must be free of ice and frozen lumps. To avoid the possibility of a quick or flash set of the concrete, when either the water or aggregates are heated to above 100 F, they should be combined in the mixer first before the cement is added.

B. Concrete Mix Temperature

1. The contractor shall monitor the mix temperature at the plant and prior to placement in the forms. Mix that does not meet the temperature requirement of 50 F to 90 F shall be rejected for use on the project.

C. Base Preparation

1. Paving or placing concrete on a frozen base, subbase, or subgrade is prohibited.

2. The base, subbase, or subgrade on which the concrete is to be placed shall be thawed and heated to at least 40 F. The method by which the base subbase or subgrade is to be heated shall be indicated in the contractor's cold weather concreting plan. Insulating blankets or heated enclosures may be required.

D. Concrete Protection and Curing

1. In addition to the curing options available in article 501-4.13 (a) (b), (c), (d), and (e) of the Standard Specifications for Construction of Airports, the contractor shall protect the concrete in such a manner as to maintain a concrete temperature of at least 50 F for 7 days.

2. The method of concrete protection shall be by use of insulating layer or heated enclosure around the concrete. The method of protection shall be indicated in the contractor's cold weather concreting plan. When insulating layers are to be used, the thermal resistance to heat transfer (R Value in $F*hr*ft^2/BTU$) of the insulation material selected, shall be appropriate for the slab thickness being constructed and shall be indicated in the cold weather concreting plan.

3. Appendix A shows a chart and table taken from the American Concrete Institute specification, ACI 306 R Cold Weather Concreting, which may be used by the contractor in selecting the proper insulation (R Value) and insulating material which may be used.

E. In-Place Concrete Temperature Monitoring

1. Once the concrete is in place, the protection method used, must ensure that the concrete temperature does not fall below 50 F for the time period specified in Section (D. 1.) of this Policy Memorandum (7 days).

2. The concrete temperature on the surface and below the surface must be monitored and recorded by the contractor for the duration of the protection period in Section (D. 1.).

3. After the concrete has hardened, surface temperature can be checked with special surface thermometers or with an ordinary thermometer that is kept covered with insulating blankets. The high and low values for each 24-hour period of protection must be measured and recorded.

4. One acceptable method of checking temperature below the concrete surface is given in the Portland Cement Association (PCA) book entitled "Design and Control of Concrete Mixtures" latest edition. The method is indicated below and it should be noted that the thermometer should be capable of recording high and low values for a given 24-hour period.

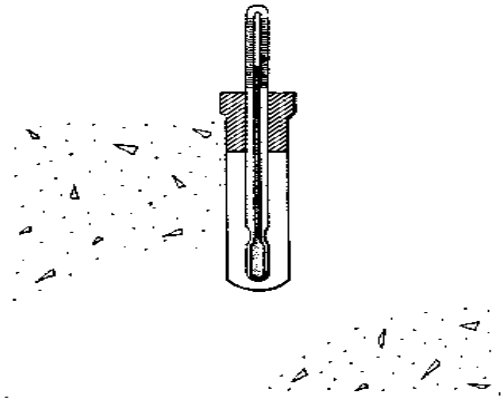

5. The exact method for <u>surface</u> and <u>sub-surface</u> concrete temperature monitoring shall be indicated in the contractor's cold weather concreting plan. The maximum permissible difference between the interior and surface temperature is 35 F. Adjustments in protection method shall be implemented if the maximum permissible difference is exceeded.

F. Strength specimen handling

1. The Contractor is responsible for making, transporting, and curing all samples (beams or cylinders)
2. The Contractor is required to load the testing machine and dispose of the broken pieces.
3. Onsite, indoor curing facilities, meeting the requirements of ASTM C-31, shall be required for cold weather concreting operations.

4. Sampling for strength specimens shall be according to the Contract Special Provisions. Sampled concrete shall be transported to the indoor curing facilities for the casting of strength specimens.

5. The exact location and description of the curing facilities shall be indicated in the contractor's cold weather concreting plan.

6. The method of transporting concrete sampled from the grade to the curing facilities for casting shall be indicated in the contractor's cold weather concreting plan.

Alan D. Mlacnik, P.E.
Bureau Chief of Airport Engineering

Supersedes Policy Memorandum 2001-1 dated January 1, 2004

APPENDIX A

Minimum exposure temperatures for concrete flatwork placed on the ground for concrete placed & surface temperature maintained at 50 F (10 C) for 3 days on ground at 35 F (2 C)

Slab thickness, in. (m)	Minimum ambient air temperature, deg F (deg C) allowable when insulation having these values of thermal resistance **R**, hr-ft^2-F/Btu (m^2-K/W), is used			
	R = 2 (0.35)	**R** = 4 (0.70)	**R** = 6 (1.06)	**R** = 8 (1.41)
Cement content = 300 lb/yd2 (178 kg/m2)				
4 (0.10)	*	*	*	*
8 (0.20)	*	*	*	*
12 (0.31)	*	*	*	*
18 (0.46)	42 (6)	38 (3)	32 (0)	26 (-3)
24 (0.61)	37 (3)	25 (-4)	11 (-12)	-3 (-19)
30 (0.76)	31 (-1)	15 (-9)	-1 (-18)	-17 (-27)
36 (0.91)	31 (-1)	12 (-11)	-5 (-21)	-22 (-30)
Cement content = 400 lb/yd2 (237 kg/m2)				
4 (0.10)	*	*	*	*
8 (0.20)	*	*	*	*
12 (0.31)	46 (8)	44 (7)	42 (6)	40 (4)
18 (0.46)	36 (2)	22 (-6)	8 (-13)	-6 (-21)
24 (0.61)	28 (-2)	9 (-13)	-10 (-23)	-29 (-34)
30 (0.76)	21 (-6)	0 (-18)	-21 (-29)	-42 (-41)
36 (0.91)	21 (-6)	-4 (-20)	-29 (-34)	-50 (-46)
Cement content = 500 lb/yd2 (296 kg/m2)				
4 (0.10)	*	*	*	*
8 (0.20)	*	*	*	*
12 (0.31)	42 (6)	36 (2)	30 (-1)	24 (-4)
18 (0.46)	30 (-1)	12 (-11)	-6 (-21)	-22 (-30)
24 (0.61)	21 (-6)	-5 (-21)	-31 (-35)	-50 (-46)
30 (0.76)	16 (-9)	-10 (-23)	-42 (-41)	-74 (-59)
36 (0.91)	16 (-9)	-18 (-28)	-50 (-46)	#
Cement content = 600 lb/yd2 (356 kg/m2)				
4 (0.10)	*	*	*	*
8 (0.20)	*	*	*	*
12 (0.31)	38 (3)	26 (-3)	14 (-10)	2 (-17)
18 (0.46)	24 (-4)	0 (-18)	-24 (-31)	-48 (-44)
24 (0.61)	14 (-10)	-16 (-27)	-46 (-43)	-82 (-63)
30 (0.76)	10 (-12)	-20 (-29)	-62 (-52)	#
36 (0.91)	7 (-14)	-30 (-34)	#	#

* > 50 F (10 C): additional heat required

<< -60 F (-51 C)

Minimum exposure temperatures for concrete flatwork placed on the ground for concrete placed & surface temperature maintained at 50 F (10 C) for 7 days on ground at 35 F (2 C)

Slab thickness, in. (m)	Minimum ambient air temperature, deg F (deg C) allowable when insulation having these values of thermal resistance **R**, hr-ft^2-F/Btu (m^2-K/W), is used			
	R = 2 (0.35)	**R** = 4 (0.70)	**R** = 6 (1.06)	**R** = 8 (1.41)
Cement content = 300 lb/yd2 (178 kg/m2)				
4 (0.10)	*	*	*	*
8 (0.20)	*	*	*	*
12 (0.31)	*	*	*	*
18 (0.46)	46 (8)	42 (6)	36 (2)	30 (-1)
24 (0.61)	40 (4)	31 (-1)	22 (-6)	11 (-12)
30 (0.76)	35 (2)	22 (-6)	7 (-14)	-8 (-22)
36 (0.91)	31 (-1)	13 (-11)	-5 (-21)	-23 (-31)
Cement content = 400 lb/yd2 (237 kg/m2)				
4 (0.10)	*	*	*	*
8 (0.20)	*	*	*	*
12 (0.31)	*	*	*	*
18 (0.46)	41 (5)	32 (0)	22 (-6)	12 (-11)
24 (0.61)	35 (2)	19 (-7)	-1 (-17)	-15 (-26)
30 (0.76)	28 (-2)	8 (-13)	-14 (-26)	-36 (-38)
36 (0.91)	23 (-5)	-4 (-20)	-29 (-34)	-54 (-48)
Cement content = 500 lb/yd2 (296 kg/m2)				
4 (0.10)	*	*	*	*
8 (0.20)	*	*	*	*
12 (0.31)	48 (9)	44 (7)	40 (4)	36 (2)
18 (0.46)	36 (2)	22 (-6)	8 (-13)	-6 (-21)
24 (0.61)	28 (-2)	6 (-14)	-16 (-27)	-38 (-39)
30 (0.76)	22 (-6)	-7 (-22)	-36 (-38)	-64 (-53)
36 (0.91)	16 (-9)	-18 (-28)	-50 (-46)	#
Cement content = 600 lb/yd2 (356 kg/m2)				
4 (0.10)	*	*	*	*
8 (0.20)	*	*	*	*
12 (0.31)	44 (7)	38 (3)	32 (0)	26 (-3)
18 (0.46)	31 (-1)	14 (-10)	-5 (-21)	-24 (-31)
24 (0.61)	22 (-6)	-5 (-21)	-32 (-36)	-61 (-52)
30 (0.76)	14 (-10)	-19 (-28)	-67 (-55)	#
36 (0.91)	7 (-14)	-30 (-34)	#	#

* > 50 F (10 C): additional heat required

< -60 F (-51 C)

Thermal Resistance of Various Insulating Materials

Insulating Material	Thermal resistance "R" for these thicknesses of material*	
	1 in., hr·ft3·F / Btu	10 mm, m3·K / W
Boards and slabs		
Expanded polyurethane (R-11 exp.)	6.25	0.438
Expanded polystyrene extruded (R-11 exp.)	5	0.347
Expanded polystyrene extruded, plain	4	0.277
Glass fiber, organic bonded	4	0.277
Expanded polystyrene, molded beads	3.57	0.247
Mineral fiber with resin binder	3.45	0.239
Mineral fiber board, wet felted	2.94	0.204
Sheathing, regular density	2.63	0.182
Cellular glass	2.63	0.182
Laminated paperboard	2	0.139
Particle board (low density)	1.85	0.128
Plywood	1.25	0.087
Blanket		
Mineral fiber, fibrous form processed from rock, slag, or glass	3.23	0.224
Loose fill		
Wood fiber, soft woods	3.33	0.231
Mineral fiber (rock, slag, or glass)	2.5	0.173
Perlite (expanded)	2.7	0.187
Vermiculite (exfoliated)	2.2	0.152
Sawdust or shavings	2.22	0.154

*Values from ASHRAE Handbook of Fundamentals, 1977, American Society of Heating, Refrigerating, and Air-Conditioning Engineers, New York.

State of Illinois
Department of Transportation
Division of Aeronautics

POLICY MEMORANDUM

December 3, 2020	Springfield, Illinois	Number 2003-1

TO: CONSULTANTS & CONTRACTORS

SUBJECT: REQUIREMENTS FOR LABORATORY, TESTING, QUALITY CONTROL, AND PAVING OF SUPERPAVE HMA CONCRETE MIXTURES FOR AIRPORTS

I. SCOPE

The purpose of this policy memorandum is to define to the Contractor the requirements concerning the laboratory, testing, Quality Control, and paving of HMA mixtures utilizing Superpave technology. References are made to the most recent issue of the Standard Specifications for Construction of Airports (Standard Specifications) and to American Society for Testing and Materials (ASTM), American Association of State Highway and Transportation Officials (AASHTO) and IDOT Bureau of Materials Illinois Lab Procedure (ITP) testing methods. The Quality Assurance and acceptance responsibilities of the Resident Engineer are described in Policy Memorandum 96-3.

II. LABORATORY

The Contractor shall provide a laboratory located, at the plant, according to the current Illinois Department of Transportation, Bureau of Materials Policy Memorandum (PM) 6-08, *Minimum Private Laboratory Requirements for Construction Materials Testing or Mix Design*. The laboratory shall be of sufficient size and be furnished with the necessary equipment and supplies for adequately and safely performing the Contractor's Hot Mix Asphalt (HMA) Job Mix Formula (JMF), Quality Control (QC) testing and Quality Assurance (QA) testing. The laboratory and equipment furnished by the Contractor shall be properly calibrated and maintained. The Contractor shall maintain a record of calibration results at the laboratory. The Engineer may inspect measuring and testing devices at any time to confirm both calibration and condition. If the Engineer determines that the equipment is not within the limits of dimensions or calibration described in the appropriate test method, he may stop production until corrective action is taken. If laboratory equipment becomes inoperable or insufficient to keep up with mix production testing, the Contractor shall cease mix production until adequate and/or sufficient equipment is provided.

III. MIX DESIGN SUBMITTAL

Based upon data and test results submitted by the Contractor, the Illinois Division of Aeronautics (IDA) Engineer of Construction & Materials shall issue the final Job Mix Formula (JMF) approval letter that concurs or rejects the Contractor's proposed JMF. The Contractor will be required to perform the sampling and laboratory testing and develop a complete mix design, according to the following guidelines: Mix design submittals should be submitted to IDA, Construction/Material Section, Attn: Certification and Mixtures Engineer. Note: Quality Control (QC) Managers shall

be Level III QC/QA qualified and will be responsible for all mix designs. All Technicians obtaining samples and performing gradations shall have successfully completed the IDOT Mixture Aggregate Technician Course and Technicians performing mix design testing and plant sampling/testing shall have successfully completed the IDOT Bituminous Concrete Level 1 Technician Course under the Illinois Department of Transportation, Bureau of Materials & Physical Research QC/QA Training Program.

A. Initial Mix Design Submittal

1. Use the first tab/page of the IDOT, QC/QA Package, Mix Design Software spreadsheet workbook. Provide the Producer name, Producer # and Producer location of each aggregate and asphalt binder (AB). Producers are assigned Producer numbers by IDOT Central Bureau of Materials.

2. Material code for each aggregate.

3. Aggregate Gradations per ASTM C-136 (The Contractor shall obtain representative samples of each aggregate).

4. Material code for each aggregate (i.e. 022CM11, etc.).

5. Material code for the grade of AB.

6. Proposed Aggregate Blend (% for each aggregate) Note: Based on the gradation results, the Contractor shall select the blend percentages that comply with the Standard Specifications, Section 401/403 – 3.3 (Table: Aggregate – Asphalt Pavements)

7. Producer name, Producer #, and specific gravity of the proposed asphalt cement.

8. IDOT approved Performance Grade (PG) Binder shall be used unless otherwise specified by the IDA Engineer of Construction & Materials.

After verification and approval by IDA of the proposed design information from this Section A, Initial Mix Design Submittal, the Contractor shall proceed to Section B, Mixture Design and Testing, and perform mixture tests on 4 gyratory brix sample (4 point mix design) to determine the optimum AB content for the target Air Voids.

<u>Note: If Section A, Initial Mix Design Submittal, is not performed first, and the complete mix design (gyratory testing) is submitted with an unapproved material source or an incorrect aggregate blend, then the gyratory laboratory testing would have to be re-done.</u>

B. Preliminary Mixture Design & Testing

Design Parameters

Gyrations (N_{des}) – per Standard Specifications for Construction of Airports (Standard Specifications), Section 401/403 – 3.3 (JMF), Table (Asphalt Design Criteria)
Asphalt Content – AC% per Standard Specifications, Section 401/403 – 3.3 (JMF), Table (Aggregate – Asphalt Pavements)
Maximum Specific Gravity – G_{mm} (AAHSTO T 209)
Bulk Specific Gravity – G_{mb} (AAHTO T 166)
% air voids – V_a (ASTM D3203) per Standard Specifications, Section 401/403 – 3.3 Table (Asphalt Design Criteria)
VFA % – per Standard Specifications, Section 401/403 – 3.2 (JMF), Table (Asphalt Design Criteria)

C. Preliminary Mix Design Submittal

The Preliminary JMF including all test results shall be submitted to IDA, Construction/Material Section, Attn: Certification and Mixtures Engineer with the following data:

a) Aggregate & asphalt cement material codes
b) Aggregate & asphalt cement producer numbers, names, and locations
c) Percentage of each individual aggregate
d) Aggregate blend % for each sieve
e) AC Specific Gravity
f) Bulk Specific Gravity and Absorption for each aggregate
g) Summary of Superpave Design Data: AC % Mix, G_{mb}, G_{mm}, VMA, Voids (Total Mix), Voids Filled, V_{be}, P_{be}, P_{ba}, G_{se}
h) Optimum design data listing: AC % Mix, G_{mb}, G_{mm}, VMA, Voids (Total Mix), Voids Filled, G_{se}, G_{sb}
i) Percent of asphalt that any RAP will add to the mix
j) Graphs for the following: Gradation on 0.45 Power Curve, AC vs. Voids (Total Mix), AC vs. Specific Gravities, AC vs. Voids Filled, AC vs. VMA
k) Tensile Strength Ratio (TSR)
l) Type and amount of anti-strip agent when used
m) Date the JMF was developed

D. Mix Approval

Once the preliminary JMF is reviewed and approved by IDA, a JMF approval letter will be issued to the consultant and contractor. Production of HMA is not authorized until a JMF letter has been issued.

E. Change in Material Sources

The above procedure, III. MIX DESIGN SUBMITTAL, shall be repeated for each change in material source or gradation of aggregate materials.

IV. MIX PRODUCTION TESTING

The Quality Control (QC) of the manufacture and placement of HMA mixtures is the responsibility of the Contractor and will be according to the Standard Specifications, Section 401/403-5.1 - 5.6. In addition, the Contractor shall develop a Contractor Quality Control Program (CQCP) in accordance with Item 100 in the Standard Specifications. The (CQCP) shall be submitted on the Form AER 27, Hot Mix Asphalt (HMA) Quality Control Plan. The Contractor shall perform or have performed the inspection and tests required to assure conformance to contract requirements. Quality Control includes the recognition of defects and their immediate correction. This may require increased testing, communication of test results to the plant or the job site, modification of operations, suspension of HMA production, rejection of material, or other actions as appropriate. The Resident Engineer shall be immediately notified of any failing tests and subsequent remedial action. Form AER-14 shall be reported to IDA, Construction/Material Section, Attn: Certification and Mixtures Engineer and the Resident Engineer no later than the start of the next workday. The Contractor shall provide a Quality Control (QC) Manager who will have overall responsibility and authority for Quality Control. This individual shall have successfully completed the IDOT Division of Highways HMA Concrete Level II Technician Course "HMA Proportioning and Mixture Evaluation." In addition to the QC Manager, the Contractor shall provide sufficient and qualified personnel to perform the required visual inspections, sampling, testing, and documentation in a timely manner.

V. TEST SECTION (Note: Applies for Method II only (≥ 2,000 tons/pay item))

The purpose of the test section is to determine if the mix is acceptable and can be compacted to a consistent passing density. The test strip construction and acceptance will be according to the Standard Specifications, Section 401/403-3.5.

VI. MATERIAL ACCEPTANCE

Material acceptance and acceptance sampling to determine conformance to the contract specifications will be performed by the Resident Engineer in accordance with the Standard Specifications, Section 401/403-6.1. In addition to the requirements set forth in Section 401/403-6.1 the R.E. shall perform sample tests at a rate of 1/5000 tons randomly selected by the R.E. and shall be sent with an identification sheet (Form AER 24, Sample Identification) to an ASTM certified independent laboratory. If the project is < 5000 tons, 1 sample selected randomly shall be sent.

Alan D. Mlacnik, P.E.
Bureau Chief of Airport Engineering

Supersedes Policy Memorandum 2003-1 dated June 12, 2004

Illinois Department of Transportation

Memorandum

To: Airport Consultants and Contractors

From: William Eves, P.E.

Subject: HMA Comparison Samples

Date: December 7, 2020

In accordance with Policy Memorandum 96-3, the Resident Engineer (R.E.) shall obtain split comparison samples from the contractor for testing by an ASTM-certified, independent testing laboratory. In order to reduce splitting errors, the R.E. shall request that the contractor split the sample down to individual test sample size. The split samples shall be placed in individual paper bags for each test.

The following list shows the number and size of each sample:

3 Superpave Gyratory Brix (Gmb)..... 3 bags: 4800 grams each
Vacuum Pycnometer Test (Gmm)……...2 bags: 1500 grams each
Ignition Oven or Extraction……2 bags: 1500 grams each

Each paper bag shall be identified with the following information:

Airport Name:
Illinois Project Number:
Type of Mix (Base or Surface):
Date Sampled:
Lot-Sublot Number:
Type of test (Brix - Pycnometer - Ignition Oven or Extraction):

For the samples identified as brix the R.E. shall also include the number of gyrations that are required in the construction contract: Illinois Standard Specifications for Construction of Airports (September 25, 2020), Items 401 and 403, Asphalt Design Criteria.

NUMBER OF SAMPLES TO BE SUBMITTED FOR TESTING

One per test section for each type of mix, then one randomly selected sample for each 5000 tons of mix produced under production paving. Projects with less than 5000 tons of mix shall have one split sample tested per mix type for the project in addition to the test section split sample, if a test section is specified. The split samples not selected shall be stored by the contractor for use at the discretion of the Division of Aeronautics.

The R.E. shall place all seven (7) bags in a box along with all samples and ship them to an ASTM-certified, independent lab for testing. The cost of all testing

is to be borne by the Consultant. The lab shall be chosen by the Consultant but shall not be the same one used by the Contractor. All testing results shall be obtained in a timely manner. The R.E. shall also fill out the sample identification sheet, which shall be sent to the laboratory. Copies of the sample identification sheet and all testing results shall be submitted to:

Illinois Department of Transportation, Division of Aeronautics
Attn: Mixtures and Certification Engineer

Supersedes Comparison Samples Memorandum, dated February 20, 2014

ILLINOIS DEPARTMENT OF TRANSPORTATION
DIVISION OF AERONAUTICS

SAMPLE IDENTIFICATION

AIRPORT_____ LOCATION_____

ILLINOIS PROJECT NO. _____

MIX PRODUCER _____

PRODUCER NUMBER _____

LOCATION _____

TYPE OF MIX _____

LOT NUMBER _____ SUBLOT NUMBER _____

DATE SAMPLED _____

SAMPLED FROM _____

OF GYRATIONS _____

COMMENTS_____

_____

_____

FILL IN ALL BLANKS

_____
R.E. or REPRESENTATIVE SIGNATURE

EMAIL COPY TO:

DIVISION OF AERONAUTICS
MIXTURES and CERTIFICATIONS ENGINEER

NOTE: Samples should be submitted on day of sampling but no later than 48 hours.

FINAL (100%) ENGINEER'S OPINION OF CONTRACT TIME

PROJECT: REMOVE & REPLACE A PORTION OF THE AIRCRAFT PARKING APRON

AIRPORT: DEKALB TAYLOR MUNICIPAL AIRPORT
DEKALB, ILLINOIS
AIP PROJ.: 3-17-SBGP-184
IL PROJ.: DKB-4924

BY: CRAWFORD, MURPHY & TILLY, INC.
CONSULTING ENGINEERS
550 NORTH COMMONS DRIVE, SUITE #116,
AURORA, IL 60504
DATE: 3/3/2023

			ENGINEER'S ESTIMATE		
ITEM NO.	**ITEM DESCRIPTION**	**UNIT**	**ESTIMATED QUANTITY**	**WORKLOAD FACTOR**	**ESTIMATED WORKING DAYS**
AR150510	ENGINEER'S FIELD OFFICE	LS	1.00	*	*
AR150520	MOBILIZATION	LS	1.00	1	1.0
AR152410	UNCLASSIFIED EXCAVATION	CY	850.00	450	1.9
AR152480	SHOULDER ADJUSTMENT	SY	600.00	600	1.0
AR208515	POROUS GRANULAR EMBANKMENT	CY	225.00	*	*
AR209606	CRUSHED AGGREGATE BASE COURSE - 6"	SY	5,350.00	1,780	3.0
AR401610	BITUMINOUS SURFACE COURSE	TON	50.00	100	0.5
AR401900	REMOVE BITUMINOUS PAVEMENT	SY	5,300.00	2,650	2.0
AR403610	BITUMINOUS BASE COURSE	TON	250.00	500	0.5
AR501510	10" PCC PAVEMENT	SY	4,950.00	840	5.9
AR501530	PCC TEST BATCH	EACH	1.00	1	1.0
AR501900	REMOVE PCC PAVEMENT	SY	35.00	*	*
AR510900	REMOVE TIE DOWN	EACH	7.00	*	*
AR510901	REMOVE TIE DOWN - TYPE A	EACH	5.00	*	*
AR602510	BITUMINOUS PRIME COAT	GAL	110.00	*	*
AR603510	BITUMINOUS TACK COAT	GAL	80.00	*	*
AR620900	PAVEMENT MARKING REMOVAL	SF	1,450.00	*	*
AR705526	6" PERFORATED UNDERDRAIN W/SOCK	LF	1,250.00	313	4.0
AR705610	CONCRETE HEADWALL FOR UNDERDRAIN	EACH	1.00	*	*
AR705640	UNDERDRAIN CLEANOUT	EACH	8.00	4	2.0
AR705900	REMOVE UNDERDRAIN	LF	100.00	*	*
AR705904	REMOVE UNDERDRAIN CLEANOUT	EACH	2.00	*	*
AR901510	SEEDING	ACRE	0.15	0.4	0.4
AR908515	HEAVY-DUTY HYDRAULIC MULCH	ACRE	0.15	0.4	0.4
	* ITEM ASSUMED NON-CONTROLLING		**TOTAL ESTIMATED WORKING DAYS =**		**24**

STANDARD DAYTIME CONSTRUCTION SCHEDULE - CALENDAR DAY BASIS

ANTICIPATED CONSTRUCTION START DATE: **August 25, 2023**

	CAL DAYS	WORK DAYS
Aug-23	7	3
Sep-23	30	16
Oct-23	10	5
TOTAL	**47**	**24**

ANTICIPATED CONSTRUCTION COMPLETION DATE: **October 11, 2023**

DEKALB TAYLOR MUNICIPAL AIRPORT - 100% COST ESTIMATE

PROJECT: REMOVE & REPLACE A PORTION OF THE AIRCRAFT PARKING APRON
DATE: 3/3/2023
AIRPORT: DEKALB TAYLOR MUNICIPAL AIRPORT
DEKALB, ILLINOIS
FED PROJ.: 3-17-SBGP-184
IL PROJ.: DKB-4924

BY: CRAWFORD, MURPHY & TILLY, INC.
CONSULTING ENGINEERS
550 NORTH COMMONS DRIVE, SUITE #116,
Aurora, IL 60504

				ENGINEER'S ESTIMATE	
ITEM NO.	**ITEM DESCRIPTION**	**UNIT**	**QUANTITY**	**UNIT PRICE**	**TOTAL COST**
AR150510	ENGINEER'S FIELD OFFICE	LS	1.00	$6,500.00	$6,500.00
AR150520	MOBILIZATION	LS	1.00	$69,713.15	$69,713.15
AR152410	UNCLASSIFIED EXCAVATION	CY	850.00	$35.00	$29,750.00
AR152480	SHOULDER ADJUSTMENT	SY	600.00	$5.85	$3,510.00
AR208515	POROUS GRANULAR EMBANKMENT	CY	225.00	$55.00	$12,375.00
AR209606	CRUSHED AGGREGATE BASE COURSE - 6"	SY	5,350.00	$15.00	$80,250.00
AR401610	BITUMINOUS SURFACE COURSE	TON	50.00	$120.00	$6,000.00
AR401900	REMOVE BITUMINOUS PAVEMENT	SY	5,300.00	$6.25	$33,125.00
AR403610	BITUMINOUS BASE COURSE	TON	250.00	$115.00	$28,750.00
AR501510	10" PCC PAVEMENT	SY	4,950.00	$86.00	$425,700.00
AR501530	PCC TEST BATCH	EACH	1.00	$10,000.00	$10,000.00
AR501900	REMOVE PCC PAVEMENT	SY	35.00	$12.48	$436.80
AR510900	REMOVE TIE DOWN	EACH	7.00	$129.60	$907.20
AR510901	REMOVE TIE DOWN - TYPE A	EACH	5.00	$486.00	$2,430.00
AR602510	BITUMINOUS PRIME COAT	GAL	110.00	$5.00	$550.00
AR603510	BITUMINOUS TACK COAT	GAL	80.00	$5.00	$400.00
AR620900	PAVEMENT MARKING REMOVAL	SF	1,450.00	$4.10	$5,945.00
AR705526	6" PERFORATED UNDERDRAIN W/SOCK	LF	1,250.00	$27.75	$34,687.50
AR705610	CONCRETE HEADWALL FOR UNDERDRAIN	EACH	1.00	$1,500.00	$1,500.00
AR705640	UNDERDRAIN CLEANOUT	EACH	8.00	$1,310.00	$10,480.00
AR705900	REMOVE UNDERDRAIN	LF	100.00	$9.35	$935.00
AR705904	REMOVE UNDERDRAIN CLEANOUT	EACH	2.00	$250.00	$500.00
AR901510	SEEDING	ACRE	0.15	$8,000.00	$1,200.00
AR908515	HEAVY-DUTY HYDRAULIC MULCH	ACRE	0.15	$8,000.00	$1,200.00

SUBTOTAL OF ESTIMATED CONSTRUCTION COSTS =	$	766,844.65
ESTIMATED DESIGN PHASE SERVICES ENGINEERING =	$	92,200.00
ESTIMATED SPECIAL SERVICES ENGINEERING =	$	6,000.00
ESTIMATED CONSTRUCTION PHASE ENGINEERING =	$	100,000.00
ESTIMATE OF TOTAL PROJECT COST =	$	965,044.65
OP&P PROGRAMMING LETTER =	$	940,000.00

FINAL (100%) ENGINEER'S ESTIMATE OF PROBABLE DBE PARTICIPATION

PROJECT: REMOVE & REPLACE A PORTION OF THE AIRCRAFT PARKING APRON

AIRPORT: DEKALB TAYLOR MUNICIPAL AIRPORT
DEKALB, ILLINOIS
AIP PROJ.: 3-17-SBGP-184
IL PROJ.: DKB-4924

BY: CRAWFORD, MURPHY & TILLY, INC.
CONSULTING ENGINEERS
550 NORTH COMMONS DRIVE, SUITE #116,
AURORA, IL 60504

NOTES:

DATE: 3/3/2023

				ENGINEER'S ESTIMATE		DBE PARTICIPATION	
ITEM NO.	**ITEM DESCRIPTION**	**UNIT**	**QUANTITY**	**UNIT PRICE**	**TOTAL COST**	**EST. DBE PART. (%)**	**EST. VALUE OF DBE PART.**
AR150510	ENGINEER'S FIELD OFFICE	LS	1.00	$6,500.00	$6,500.00		$ -
AR150520	MOBILIZATION	LS	1.00	$69,713.15	$69,713.15		$ -
AR152410	UNCLASSIFIED EXCAVATION	CY	850.00	$35.00	$29,750.00		$ -
AR152480	SHOULDER ADJUSTMENT	SY	600.00	$5.85	$3,510.00	100%	$ 3,510.00
AR208515	POROUS GRANULAR EMBANKMENT	CY	225.00	$55.00	$12,375.00		$ -
AR209606	CRUSHED AGGREGATE BASE COURSE - 6"	SY	5,350.00	$15.00	$80,250.00		$ -
AR401610	BITUMINOUS SURFACE COURSE	TON	50.00	$120.00	$6,000.00		$ -
AR401900	REMOVE BITUMINOUS PAVEMENT	SY	5,300.00	$6.25	$33,125.00		$ -
AR403610	BITUMINOUS BASE COURSE	TON	250.00	$115.00	$28,750.00		$ -
AR501510	10" PCC PAVEMENT	SY	4,950.00	$86.00	$425,700.00		$ -
AR501530	PCC TEST BATCH	EACH	1.00	$10,000.00	$10,000.00		$ -
AR501900	REMOVE PCC PAVEMENT	SY	35.00	$12.48	$436.80		$ -
AR510900	REMOVE TIE DOWN	EACH	7.00	$129.60	$907.20		$ -
AR510901	REMOVE TIE DOWN - TYPE A	EACH	5.00	$486.00	$2,430.00		$ -
AR602510	BITUMINOUS PRIME COAT	GAL	110.00	$5.00	$550.00		$ -
AR603510	BITUMINOUS TACK COAT	GAL	80.00	$5.00	$400.00		$ -
AR620900	PAVEMENT MARKING REMOVAL	SF	1,450.00	$4.10	$5,945.00		$ -
AR705526	6" PERFORATED UNDERDRAIN W/SOCK	LF	1,250.00	$27.75	$34,687.50	100%	$ 34,687.50
AR705610	CONCRETE HEADWALL FOR UNDERDRAIN	EACH	1.00	$1,500.00	$1,500.00	100%	$ 1,500.00
AR705640	UNDERDRAIN CLEANOUT	EACH	8.00	$1,310.00	$10,480.00	100%	$ 10,480.00
AR705900	REMOVE UNDERDRAIN	LF	100.00	$9.35	$935.00		$ -
AR705904	REMOVE UNDERDRAIN CLEANOUT	EACH	2.00	$250.00	$500.00		$ -
AR901510	SEEDING	ACRE	0.15	$8,000.00	$1,200.00	100%	$ 1,200.00
AR908515	HEAVY-DUTY HYDRAULIC MULCH	ACRE	0.15	$8,000.00	$1,200.00	100%	$ 1,200.00
				SUBTOTAL OF ESTIMATED CONSTRUCTION COSTS =	$ 766,844.65	**DBE=**	$ 52,577.50
						TOTAL ESTIMATED DBE PARTICIPATION =	6.9%
						SUGGESTED DBE UTILIZATION GOAL =	**7.0%**

Res 2023-038

CMT

July 3, 2023

Renee Riani
Airport Manager
DeKalb Taylor Municipal Airport
3232 Pleasant Street
DeKalb, Illinois 60115

Re: 21024802.06 *DeKalb Taylor Municipal Airport*
DeKalb, Illinois
IL Project: DKB-4924
SBG Project: 3-17-SBGP-184
Remove & Replace a Portion of the Aircraft Parking Apron
Agreement for Construction Phase Engineering Services

Dear Renee:

Enclosed are two copies of the agreement for construction phase engineering services on the above referenced project for review and signature. Upon execution of the agreement, please retain one (1) copy for your records and return the other copy to our office.

Should you have questions or require additional information, please contact our office.

Respectfully Submitted,

CRAWFORD, MURPHY & TILLY, INC.

Doug Klonowski, PE

Doug Klonowski, P.E.
Vice President/Aurora Office Co-Manager

Encls. (CPS Agreement)
c: CMT – Contract File 21024802.06

550 N Commons Drive Suite 116 Aurora, Illinois 60504 PHONE 630.820.1022 FAX 630.820.0350 cmtengr.com Engineers and Consultants

STANDARD AGREEMENT FOR CONSULTANT SERVICES AT ILLINOIS AIRPORTS FOR ARCHITECTURAL/ENGINEERING (A/E), PLANNING AND SPECIAL SERVICES

Authorized for use by
The Illinois Department of Transportation
Division of Aeronautics
Effective: June 2012

[ ] Preliminary Assessment and Schematic Design

[X] Construction Phase Services

[ ] Design Phase Services

[ ] Planning and Special Services

THIS AGREEMENT, made at **DeKalb**, Illinois, this **10th** day of **July** in the year 20**23** by and between the **City of DeKalb** (hereinafter referred to as the "Sponsor"), and **Crawford, Murphy and Tilly, Inc.** (hereinafter referred to as the "Consultant"). This Agreement expires 5 years from the date of execution.

WITNESSETH

The Sponsor intends to undertake the accomplishment of a project pursuant to the development of a public air navigation facility known as the **DeKalb Taylor Municipal Airport (DKB)** in **DeKalb** County, state of Illinois; and the project shall be identified as the Illinois Project No. **DKB-4924**; AIP Project No. **3-17-SBGP- 184**; The following is the detailed project title and description from the Illinois Department of Transportation's Office of Planning and Programming (OP&P) program letter which shall be carried through the development of the project (attach supplemental information as necessary in Section I.H., Detailed Scope of Services):

Remove & Replace a Portion of the Aircraft Parking Apron

A detailed sketch of the proposed work, labeled ATTACHMENT P, shall be attached.

In consideration of the benefits which will accrue to the parties hereto by virtue of the Agreement and the respective covenants herein contained, IT IS MUTUALLY COVENANTED AND AGREED as follows:

The Consultant agrees to furnish executed "Certification of Engineer" and certain professional engineering services enumerated herein-after, in connection with the implementation and development of the aforesaid project.

The Department of Transportation, Division of Aeronautics within the state of Illinois shall act as Agent of the Owner/Sponsor for all matters involving the development of any public air navigation facility by virtue of the Illinois Aeronautics Act. The Illinois Aeronautics Act requires and directs the Illinois Department of Transportation, Division of Aeronautics (hereinafter referred to as the "Department") to "*regulate and supervise aeronautics within this state*", with "*aeronautics*" defined as "*...the design, establishment, construction, extension, operation, improvement, repair or maintenance of airports...*". The Department shall not expend any funds appropriated, or made available for any work upon any such project that is not contracted for and constructed or developed under the supervision or direction of the Department. Financial assistance may include reimbursement to eligible airport Sponsors for engineering costs directly related to projects financed in whole or in part by federal/state monies provided such engineering costs were approved by the Department prior to the payment of these costs by the airport Sponsor. The approval of engineering costs prior to payment shall qualify those costs for federal/state reimbursement but shall not constitute an obligation of federal/state funds.

Since the services contemplated under this Agreement are professional in nature, it is understood that the Consultant, acting as an individual, partnership, firm or other legal entity, is of professional status and will be governed by professional ethics in their relationship to the Department and the Sponsor. The Department acknowledges the professional and ethical status of the Consultant by approving this Agreement and the associated fees for federal/state eligibility (either in whole or part) on the basis of their qualifications and experience and determining their compensation by mutually satisfactory negotiations.

Any additions/deletions, revisions/modifications to this Agreement without the expressed written consent of the Department shall void this Agreement as it relates to state and federal funding participation eligibility.

I. ARCHITECTURAL/ENGINEERING (A/E), PLANNING AND SPECIAL SERVICES

The Consultant agrees to perform various professional engineering and planning services and provide necessary and required information pursuant to the accomplishment of the above referenced project.

It is understood that meetings will be common to all phases. The Consultant will coordinate project kick-off, pre-design and pre-construction meetings and project status update meetings, as required, in order to resolve project issues with the Department, Sponsor and/or other regulatory and review agencies. The Department shall be notified of scheduled agency meetings and given the opportunity to participate. Meetings for which effort will be billed shall be thoroughly documented by minutes with copies distributed to the Sponsor and the Department within 10 days of the meeting. Failure to properly document meeting discussions could result in the loss of part or all of the professional services compensation eligibility associated with this activity.

A. PRELIMINARY ASSESSMENT AND SCHEMATIC DESIGN – Not included in agreement

This phase includes activities required for agency coordination and permit development, non-routine surveys, testing and architectural/engineering preliminary design considerations of a project. Elements of this phase may include development of architectural schematic building designs and reports, non-routine geological and field investigations (soil borings and pavement cores), DCP testing, FWD testing (when used to evaluate pavement as part of a strengthening project), coordination of FAA reimbursable agreements, coordination of utility relocation agreements, coordination of force account activity (must be pre-approved by the Department in writing).

The Consultant shall furnish and/or perform engineering reconnaissance necessary for the preparation and development of an engineering report, bidding documents (design plans and specifications) including topographic field surveys, crack surveys, and sampling and testing for routine soils investigations (in accordance with ATTACHMENT J – Testing Schedule & ATTACHMENT K – Testing Rates & Cost Summary).

This phase will culminate in the submittal of a detailed engineering report with project alternatives and design recommendations and project completion timeline assessment.

The Consultant shall furnish an engineering report in accordance with standard practices and the provisions of ATTACHMENT E – Engineering Report. The report will include an analysis of preliminary surveys, geotechnical testing and alternative designs and include final project design recommendations.

The project completion timeline assessment will identify necessary effort required to complete the final project design (complete construction plans and specifications). This phase of project development will represent approximately 35% of the project design timeline. Project formulation should be consistent with the TIP submittal and the program letter project description (ATTACHMENT R). If not, identify components that have changed as a result of the preliminary assessment and schematic design analysis.

A detailed scope of services shall be attached with anticipated labor effort and costs delineated in ATTACHMENTS A / A1.

B. DESIGN PHASE SERVICES – Not included in agreement

This phase shall include activities required to accomplish a project design in accordance with the established Aeronautics letting schedule project design timeline and approved letting date determined at the pre-design meeting. Requests for time extensions beyond the previously agreed-to submittal deadline dates (as established in the Department's Letting Schedule, ATTACHMENT Q, and this Agreement) must be made to the Department in writing not less than 5 days prior to the due date of the submittal. The request for extension must be signed by a principal/officer of the Consultant's firm. Incomplete submittals will not be accepted.

Milestone submittals include the engineering report (at 35% design timeline), plan / spec review (at 80% design timeline) and final submittal of all deliverables (at 100% design timeline). A detailed scope of services shall be attached with anticipated labor effort and costs delineated in ATTACHMENTS B / B1. Elements of this phase may include:

1. CONSTRUCTION PLANS, SPECIAL PROVISIONS AND ESTIMATES

   The Consultant shall prepare and furnish for Department review and comment construction plans, special provisions and construction Safety Plan (per guidance explained in FAA AC 150/5370-2F (or current) Operational Safety on Airports during Construction) at the 80% project design timeline with detailed estimate of costs, estimated DBE participation goal and working/calendar day flow chart, for the particular design authorized in this Agreement.

2. CLARIFICATION OF PLANS

   The Consultant shall render clarification of the construction plans and specifications, when and if such clarification is deemed necessary.

3. BIDDING ASSISTANCE

   The Consultant shall assist the Sponsor and/or Department in the bidding process, analyze and summarize bid results.

C. CONSTRUCTION PHASE SERVICES

This phase shall include all basic services after the award. A detailed scope of services shall be attached with anticipated labor effort and costs delineated in ATTACHMENTS C / C1.

1. OFFICE ENGINEERING

   a. SHOP DRAWINGS
      Review the detailed construction, shop and erection drawings submitted by the contractor(s) for compliance with design concepts.

   b. SUPPLEMENTARY SKETCHES
      Preparation of elementary and supplementary sketches plus estimates required to resolve actual field conditions.

   c. RECORD DRAWINGS
      The Consultant shall prepare Record Drawings within thirty (30) days after the official Notification from the Department of the Official Acceptance of the Construction Work; and after approval by the Department, furnish said Department with one (1) set of such record drawings. The submittal format shall be in accordance with the current policies of the Department.

   d. MATERIALS CERTIFICATION
      Prior to reporting a pay item quantity for payment, the materials used and incorporated in, or associated with the pay item, shall be verified for specification compliance by the Consultant. The Consultant shall obtain and review all certifications and/or test results required by the policies of the Department and the Department's *Manual for Documentation of Airport Materials*. At the completion of, or any time prior to the completion of the final quantity of a pay item, the Consultant shall submit the aforementioned material certifications and/or test results, that were utilized for acceptance of material, to the Department for review and final approval. Prior to final payment of engineering services under this agreement, the Consultant shall have submitted required certifications and test results to the Department, and the Consultant shall have signed the Department's MATERIALS CERTIFICATION FORM.

2. FIELD ENGINEERING

a. RESIDENT ENGINEER APPROVAL
The Consultant agrees to furnish the name and qualifications of the Resident Engineer in writing for approval of the participating agencies prior to the preconstruction conference that shall attend said preconstruction conference and shall perform the various professional engineering services required of the Resident Engineer in 2.b. thru 2.f. below and inspection of construction.

b. DAILY DIARY
The Resident Engineer shall maintain a daily diary. Copies shall be forwarded to the Department (ATTACHMENT F).

c. DUTIES OF RESIDENT ENGINEER
Furnish full time (unless part time is approved by the Sponsor and/or Department) Resident Engineering of construction including project inspection, field testing, and furnish surveying at the site of the work, whose duties shall include all reasonable, proper and customary duties as are usually and customarily furnished in connection with the general engineering of construction of such improvements, including but not limited to the following:

i. Performance of acceptance and quality assurance tests when required by Department policy and/or contract specification. Examples of these tests include but are not limited to: Testing concrete for slump and air content; testing concrete for strength; testing bituminous concrete pavement for density using the nuclear method and using the Bulk Specific Gravity Method. Obtaining representative samples of miscellaneous materials such as paint, geotextile fabric, joint sealer, epoxy, polyester resin, etc. for testing as necessary, and/or as directed by the Department; performance of field density tests of earthwork embankments, backfills and subgrade; field density tests of subbase and base courses, and moisture content tests on materials where applicable; and, laboratory proctor tests where applicable. Test Reports shall be submitted to the Department within three (3) working days of the date the test was conducted.

ii. Inspection/Measurement/Oversight of construction to determine that the work was completed in substantial conformance with the approved plans and specifications, and in compliance with the requirements set forth in the contract documents. All stop or start work orders shall be issued by the Department; the Resident Engineer shall recommend the orders. Document pay item quantities reported for pay in accordance with the latest revision of the Department's *Airport Construction Documentation Manual*.

iii. Preparation and forwarding to the Department of periodic project reports required by the Department. Bi-weekly construction reports will be submitted to the Department, within three (3) calendar days of the end of the contractor's work week.

iv. To obtain and review for specification compliance, material certifications and/or test results for all materials prior to their use in the construction.

v. To reject for inclusion in the project, any materials that are delivered without certification and/or test results, or materials delivered with certification that has been found to be in noncompliance, or any defect found through visual inspection which renders the material unsuitable for inclusion in the project. The Department shall be notified when any rejections are made. Materials that are delivered without certification and/or test results may be stockpiled or

stored in a manner acceptable to the Resident Engineer until such time as the certification and/or test result arrive and are reviewed and accepted by the Resident Engineer.

vi. Preparation of Reports required per the Sponsor's NPDES permit while providing on-site services, retaining all support documentation.

vii. Participate in audits performed to determine that the project is proceeding accordingly per the plans and specifications and adhering to AIP grant requirements.

d. FINAL INSPECTION
Initiate a request, upon substantial completion of all construction work, for a final inspection by the Department. When necessary, a punch list of uncompleted items and electrical checklist (if applicable) on the project shall be established at the final inspection. Submit a final acceptance letter (punch list complete) which shall certify to the Department and the Sponsor that, to the best of the Consultant's knowledge, information and belief, the work involved has been done in substantial conformance with the plans, specifications, and Contract Document, as the same shall have been modified, or supplemented by change order, supplementary contract or otherwise, and that such work is acceptable.

e. SAFEGUARD THE SPONSOR
Endeavor to safeguard the Sponsor against any defects and deficiencies on the part of the Contractor. The Resident Engineer does not guarantee the performance of the contract by the Contractor, except that the Resident Engineer shall ensure that, to the best of the Resident Engineer's knowledge, information and belief, the work has been done in substantial conformance with the approved plans and specifications and advise the Sponsor and/or the Department in writing of any known noncompliance set forth in the contract. This does not in any way mean that the Resident Engineer is a guarantor of the Contractor's work. The Resident Engineer assumes no responsibility for safety in, on or about the job site, nor shall the Resident Engineer have any responsibility for the safety or adequacy of any equipment, building component, scaffolding, forms or other work aids provided by the contractor; nor is the Resident Engineer responsible for the superintendence of the contractor's work or any acts of the contractor.

f. OTHER ENGINEERING SERVICES
Furnish other Engineering Services which may be required by the Sponsor, including surveys. sub-surface investigations, sampling, testing, and analysis of soils, offsite inspection of materials, laboratory testing, and inspection and control at central mixing plants. Where tests must be conducted by commercial laboratories, only those laboratories approved by the Department will be utilized. If any of these services are conducted by outside firms, the Resident Engineer shall submit copies of the executed contract for such services as specified in Section III.B., of this Agreement. The charges for such services shall be specified in the contract and will remain in effect until completion of the services and acceptance by the Consultant. Certified copies of the results of all tests required by the Department under this paragraph are to be mailed to the Department within five (5) calendar days after the tests are completed.

g. FINAL QUANTITIES
Final quantities associated with the accepted construction work shall be submitted to the Department within thirty (30) days after final acceptance of the construction work.

D. PLANNING AND SPECIAL SERVICES – Not included in agreement

This phase may involve activities or studies unrelated to or outside of the scope of basic design and construction phase engineering services routinely performed by the Consultant. Those activities may include master plan and airport layout plan development, environmental studies and assessments, PCI surveys, FWD testing (when used to evaluate pavement as part of a publication revision), first-order NGS monument surveys, boundary surveys, aeronautical surveys, photogrammetric surveys and topographic mapping, preparation of property ownership plats and easements, appraisal and land acquisition services, benefit / cost analysis studies, RSA determination studies, drainage studies and analyses, FEMA/FIRM map revisions and GIS updates. A detailed scope of services shall be attached with anticipated labor effort and costs delineated in ATTACHMENTS D / D1.

E. ENDORSEMENT OF DOCUMENTS

The Consultant will endorse and seal all final draft reports, contract plans, maps, right of way plats, and special provisions for construction contract documents. Such endorsements must be made by a person, duly licensed or registered in the appropriate category by the Department of Financial and Professional Regulation of the state of Illinois, being employed by the Consultant and responsible for the portion of the services for which license registration is required. These sealed documents will serve as the record documents for the services covered by the terms of the Agreement.

F. DELIVERABLES

At a minimum, the Consultant shall provide the Department (copy Sponsor upon request) the following deliverables:

1. Final project estimate of costs complete w/ professional services fees and sponsor reimbursement estimates.
2. DBE participation goal and breakout of DBE work.
3. QA verification of ELM Engineers Estimate for Schedule of Prices.
4. Calendar day estimate of construction and detailed breakout of critical work items and associated production rates.
5. One set of final construction plans (half-size) and special provisions – sealed by the Consultant and executed by the Sponsor.
6. One copy of the construction Safety Plan (per guidance explained in FAA AC 150/5370-2F (or current) Operational Safety on Airports during Construction).
7. Original executed Consultant Project Certification (ATTACHMENT N).
8. Executed DBE Final Documentation (ATTACHMENT O).
9. Electronic copy/access of all information (via CD, electronic submittal or ftp site).

G. NOTICE-TO-PROCEED (NTP)

The Consultant shall not commence any phase of the work until the "official notice-to-proceed" (NTP) has been issued in writing either by the Sponsor or Department (via Office of Planning and Programming).

Services to be performed by the Consultant under this Agreement shall become eligible for funding participation consideration as of the date of the written NTP. The execution date of the consultant retainer agreement or the execution date of a consultant agreement for a single project after consultant selection if not included within the retainer agreement, shall constitute the NTP. The Consultant shall schedule a project phase kick-off meeting (pre-design, pre-construction, etc) with the Sponsor and the Department at the earliest possible convenience upon the Sponsor's receipt of this letter.

For projects not covered by a program letter or with program letter pending, the Sponsor is fully liable for all costs incurred as a result of such authorization pending future reimbursement once the project is programmed and a program letter is issued. The Sponsor/Consultant is required to schedule a project phase kick-off meeting (pre-design, pre-construction, etc) with the Sponsor and the Department at the earliest possible convenience.

A copy of the program letter shall be included as ATTACHMENT R of this Agreement.

In the absence of a written, dated notice-to-proceed, the execution date of this Agreement shall be used to determine the eligibility of service dates.

The Sponsor and the Department are not liable, and shall not authorize payment to the Consultant, for any services performed prior to the date of notice to proceed or the execution of this Agreement (whichever takes precedent). All effort, regardless of the notice-to-proceed authorization, is subject to review and eligibility funding determination.

H. DETAILED SCOPE OF SERVICES

Under this agreement the Engineer will provide construction phase services as provided for the project as described herein as **Remove & Replace a Portion of the Aircraft Parking Apron.**

The construction phase engineering effort contained within this agreement has been based on the following additional scope related parameters, understanding of proposed improvements and anticipated level of effort:

I. Anticipated August 25, 2023 Start of Contractor Work and Completion Date of October 11, 2023.

II. No winter shutdown is anticipated for this project

III. Assume 10 hours per day worked by the Contractor

IV. Assume Contractor work schedule of 5-6 days/week for the 47 calendar day duration. Calendar time yields 40 working days for the Contractor.

V. Engineering effort based on anticipated Contractor working days as follows: 40 working days of full-time inspection at 10 hours per day. An additional assistant inspector/resident engineer will be onsite during paving preparation/paving days (anticipated 11 total days).

VI. All Engineering effort is expected to be completed by December 1, 2023 (based on Contractor completion date).

The anticipated effort and estimated manhours for each Task is defined within Attachments C, C-1, C-2 and C-3 contained within this contract.

II. CONSULTANT COMPENSATION

The Sponsor agrees to pay the Consultant as compensation for rendering the professional services hereinabove described and submitted using the standard Department invoice forms (ATTACHMENTS G & H). Burden and overhead rates entered into this Agreement shall be in effect for the length of the agreement and will not be adjusted, except as may be determined under an audit of costs by the Auditor General or the Department. The rates used in this Agreement shall be the latest audited or provisional approved rates by IDOT as of the date of execution of this Agreement (approval letter must be attached). Should the rate change in the time between the final approval notification of fees and the execution of this Agreement, hours will be adjusted accordingly so that there is no increase in the final approved not-to-exceed amount.

Any professional services effort performed beyond the not-to-exceed limits expressed below, and for which a future amendment will be sought, will be performed under all Agreement provisions as the original contracted work. The dollar value of such effort is not considered approved for payment until review and approval by the Department.

A. PRELIMINARY ASSESSMENT AND SCHEMATIC DESIGN – Not included in agreement
For services outlined in Section I.A., Preliminary Assessment and Schematic Design, and further detailed in Section I.H., Detailed Scope of Services,

1. a lump sum payment of $_____**N/A**_____ (representing approximately 35% of the total estimated professional services compensation for design phase services as determined from the TIP request). The fee shall be paid as a lump sum when the preliminary assessment and schematic design phase deliverables (outlined in Section I.A.) are approved and accepted by the Department.

B. DESIGN PHASE SERVICES – Not included in this Agreement
For services outlined in Section I.B., Design Phase Services, and further detailed in Section I.H., Detailed Scope of Services,

1. a cost plus a fixed payment of $ _____**N/A**_____

   total amount not to exceed $_____**N/A**_____ unless a major change or addition to the scope of services is required by the Department or extensions of time are necessary for completion of the project. All justification for amendments shall be documented with effort recorded separate from the hours approved under this Agreement. All amendment requests must be supported by justification per Section III.M., Amendments to the Agreement. The payment of this fee shall be made in monthly installments submitted by the Consultant and approved by the Department. The final charges shall be submitted after the Design Phase Services have been performed, approved and all deliverables accepted by the Department in accordance with the guidance outlined in Section I.F. This period of time expires 30 days after award of the construction contract. Any submittal after this time shall not be considered eligible for payment / reimbursement by the Department unless extended by the Department.

2. a lump sum payment of $_____**N/A**_____unless a major change or addition to the scope of work is required by the Department or extensions of time are necessary for completion of the project. All justification for amendments shall be documented with effort recorded separate from the hours approved under this Agreement. All amendment requests must be supported by justification per Section III.M., Amendments to the Agreement. The fee shall be paid as a lump sum when the design phase deliverables (outlined in Section I.F.) are approved and accepted by the Department.

C. CONSTRUCTION PHASE SERVICES
For services outlined in Section I.C., Construction Phase Services, and further detailed in Section I.H, Detailed Scope of Services,

1. a cost plus a fixed payment of $ _____**$16,300.00**_____

   total amount not to exceed $_____**$146,400.00**_____ unless a major change or addition to the scope of work is required by the Department or extensions of time are necessary for completion of the project. All justification for amendments shall be documented with effort recorded separate from the hours approved under this Agreement. All amendment requests must be supported by justification per Section III.M., Amendments to the Agreement. The payment of this fee shall be made in monthly installments submitted to and approved by the Sponsor (and/or Department if applicable). The final charges shall be as soon as possible after official notification from the Consultant of the acceptance of the construction work. A time line will be submitted at each billing cycle after 50% which will indicate a projection of the completed engineering fee vs. the contractor's progress.

   If more than one contract exists for the project, the monthly invoices submitted by the Consultant shall detail the amounts of work accomplished under each separate contract. The invoices shall also indicate the dates that the services were performed. If these

services are furnished by the Consultant by obtaining such services outside the Consultant's organization, the Consultant shall be reimbursed at his actual cost for obtaining these services. However, the total payment to the Consultant shall be within the "not to exceed" amount as previously stated unless an amendment to this agreement is approved by the Sponsor (and/or Department if applicable).

D. PLANNING AND SPECIAL SERVICES – Not included in this Agreement

For services outlined in Section I.D., Planning and Special Services, and further detailed in Section I.H., Detailed Scope of Services,

1. a cost plus a fixed payment of $ **N/A**

   total amount not to exceed $ **N/A** unless a major change or addition to the scope of work is required by the Department or extensions of time are necessary for completion of the project. All justification for amendments shall be documented with effort recorded separate from the hours approved under this Agreement. All amendment requests must be supported by justification per Section III.M., Amendments to the Agreement. The payment of this fee shall be made in monthly installments submitted to and approved by the Sponsor. The final charges for the Special Services Phase shall be submitted within forty-five (45) days after official notification from the Consultant of the acceptance of the construction work or within 45 days after official notification from the Department of acceptance of other non-construction projects unless extended by the Department.

2. a lump sum payment of $ **N/A** unless a major change or addition to the scope of work is required by the Department or extensions of time are necessary for completion of the project. All justification for amendments shall be documented with effort recorded separate from the hours approved under this Agreement. All amendment requests must be supported by justification per Section III.M., Amendments to the Agreement. The fee shall be paid as a lump sum when the deliverables are approved and accepted by the Department.

III. SPECIAL CONDITIONS

The Consultant shall render the services in accordance with generally accepted Professional Standards.

A. TERMINATION

(Reference: 49 CFR Part 18.36(i)(2); FAA Order 5100.38)

The Sponsor, by written seven (7) day notice, may terminate this agreement in whole or in part at any time, because of the failure of the other party to fulfill his agreement obligations. Upon receipt of such notice, the Consultant shall: (1) immediately discontinue all services affected (unless the notice directs otherwise), and (2) deliver to the Sponsor all data, drawings, specifications, reports, estimates, summaries and such other information and materials as may have been accumulated by the Consultant in performing this agreement whether completed or in process.

1. If the termination is due to the failure of the Consultant to fulfill his agreement obligations, the Sponsor may take over the work and prosecute the same to completion by agreement or otherwise. In such case, the Consultant shall be liable to the Sponsor for any additional cost occasioned to the Sponsor thereby.

2. If, after notice of termination for failure to fulfill agreement obligations, it is determined that the Consultant had not so failed, the termination shall be deemed to have been effected for the convenience of the Sponsor.

3. It is hereby understood and agreed that should the agreement be terminated, the Consultant shall be entitled to and shall receive a fee based on the amount of work accomplished and approved by the Department up to the day of notification of termination. The fee shall be equal to the sum of the actual number of man-hours of each category of work applied at a negotiated hourly rate, plus any outside services approved by the participating agencies and accomplished prior to the notification. If terminated under Section III.HH., Breach of Contract Terms, the Consultant will not be entitled to profit on the work accomplished.

B. CHANGE IN CONSTRUCTION PLANS

It is hereby understood and agreed that if the construction plans are completed in accordance with criteria and/or decisions made by the Sponsor (and/or the Department if applicable), and approved by the Department, and said construction plans are substantially changed or revised, for any reason other than the fault of the Consultant in preparing same, then the Consultant shall be entitled to compensation for rendering the services necessary to complete the changes. The amount of this fee shall be negotiated between the Sponsor, Consultant and the Department, and approved by the Department, and an amendment to the agreement should be accomplished prior to authorizing the Consultant to proceed with the changes. The fee shall be due and payable when the revisions are approved by the Sponsor and the Department.

It is the Consultants responsibility to notify the Department as soon as possible when changes/revisions are identified that are beyond the scope of services contemplated under this Agreement.

C. HOLD HARMLESS

The Consultant shall be responsible to pay for all labor, material and equipment costs incurred and for any and all damages to property or persons to the proportionate extent arising out of the negligent performance of services under this agreement and shall indemnify and save harmless the Sponsor, (and/or the Department if applicable), their officers, agents and employees from all third party suits, claims, actions or damages of any nature whatsoever to the proportionate extent resulting there from. These indemnities shall not be limited by the listing of any insurance coverage. If any errors, negligent acts and/or omissions are made by the Consultant in any phase of the work under this agreement, the correction of which may require additional field or office work, the Consultant will be promptly notified and will be required to perform such additional services as may be necessary to correct these errors, negligent acts and/or omissions without undue delay and without additional cost to the Sponsor (and/or the Department if applicable). The Consultant shall be responsible for any damages incurred as a result of his errors, negligent acts and/or omissions and for any losses or cost to repair or remedy construction as a result of his errors, omission and/or negligent acts, to the extent such error, omission or negligent act breeches the Professional Standard of care. The Consultant shall not be responsible for any consequential damages of the Sponsor or the Department. Neither the Consultant, nor the Sponsor, nor the Department shall be obligated for the other parties' negligence or for the negligence of others.

D. DRAWING OWNERSHIP

It is further mutually agreed by the parties hereto that reproducible copies of the drawings, computer disks, tracings, construction plans, specifications and maps prepared or obtained under the terms of the contract shall be delivered to and become the property of the Sponsor and basic survey notes and sketches, charts, computations and other data shall be made available upon request of the Sponsor. If any information is used by the Sponsor or another Consultant such use or reuse by the Sponsor or others shall be at the sole risk and without liability or legal exposure to the Consultant.

E. CONTRACT FOR OUTSIDE SERVICES

If any of the services outlined in Section I. are furnished by the Consultant by obtaining such services outside the Consultant's organization, the Consultant shall provide an executed contract between the person(s) or firm and the Consultant outlining the services to be performed and the charges for the same. Two (2) copies of the executed contract shall be submitted to the participating agencies for approval prior to the services being performed; all covenants and Special Conditions shall be included and binding on all subcontracts.

F. FORMERLY NOTICE TO PROCEED (See Section I.G.)

G. SUBLET AGREEMENT

Each party binds himself, his partners, successors, executors, administrators and assigns, to the other part of this agreement and to the partners, successors, executors, administrators and assigns for such other party at all covenants of this Agreement.

Except as above, neither the Sponsor nor the Consultant shall assign, sublet or transfer his interest in this agreement without the written consent of the other party hereto.

H. AGREEMENT EXPIRES

This agreement expires upon final approval and acceptance of the completed project(s) by the Sponsor (and/or Department as applicable), and after all final engineering charges have been paid to the Consultant as of the date of project close-out or after five years from the date of execution, whichever comes first. Payment liability by the State is as outlined above (see Section I.G., Notice to Proceed and Section II., Consultant Compensation).

I. EQUAL EMPLOYMENT OPPORTUNITY

(Reference: 49 CFR Part 21; FAA AC 150/5100-15A or latest revision)

The Consultant agrees to conduct the services in compliance with all the requirements imposed by or pursuant to Title VI of the Civil Rights Act of 1964, Part 21 of the Regulations of the Secretary of Transportation, and Executive Order No. 11246, "Equal Employment Opportunity," as amended.

During the performance of this contract, the Consultant, for itself, its assigns and successors in interest (hereinafter referred to as the "Consultant") agrees as follows:

1. Compliance with Regulations. The Consultant shall comply with the Regulations relative to nondiscrimination in federally assisted programs of the Department of Transportation (hereinafter, "DOT") Title 49, Code of Federal Regulations, Part 21, as they may be amended from time to time, (hereinafter referred to as the Regulations), which are herein incorporated by reference and made a part of this contract.

2. Nondiscrimination. The Consultant, with regard to the work performed by it during the contract, shall not discriminate on the grounds of race, color, or national origin in the selection and retention of subconsultants, including procurements of materials and leases of equipment. The Consultant shall not participate either directly or indirectly in the discrimination prohibited by Section 21.5 of the Regulations, including employment practices when the contract covers a program set forth in Appendix B of the Regulations.

3. Solicitations for Subcontracts, Including, Procurements of Materials and Equipment. In all solicitations either by competitive bidding or negotiation made by the Consultant for work to be performed under a subcontract, including procurements of materials or leases of equipment, each potential subconsultant or supplier shall be notified by the Consultant of

the Consultant's obligations under this contract and the Regulations relative to nondiscrimination on the grounds of race, color, or national origin.

4. Information and Reports. The Consultant shall provide all information and reports required by the Regulations or directives issued pursuant thereto and shall permit access to its books, records, accounts, other sources of information and its facilities as may be determined by the sponsor or the Federal Aviation Administration (FAA) to be pertinent to ascertain compliance with such Regulations, orders, and instructions. Where any information required of a Consultant is in the exclusive possession of another who fails or refuses to furnish this information, the Consultant shall so certify to the sponsor or the FAA, as appropriate, and shall set forth what efforts it has made to obtain the information.

5. Sanctions for Noncompliance. In the event the Consultant's noncompliance with the nondiscrimination provisions of this contract, the sponsor shall impose such contract sanctions as may determine to be appropriate, including, but not limited to:

   a. withholding of payments to the Consultant under the contract until the Consultant complies, and/or

   b. cancellation, termination, or suspension of the contract, in whole or in part.

Incorporation of Provisions. The Consultant shall include the provisions of paragraphs 1 through 5 (above) in every subcontract, including procurement of materials and leases of equipment, unless exempt by the Regulations or directives issued pursuant thereto. The Consultant shall take such action with respect to any subcontract or procurement as the sponsor may direct as a means of enforcing such provisions including sanctions for noncompliance. Provided, however, that in the event an Consultant becomes involved in, or is threatened with, litigation with a subconsultant or supplier as a result of such direction, the Consultant may request the sponsor and/or Department to enter into such litigation to protect the interests of the sponsor and, in addition, the Consultant.

DISADVANTAGED BUSINESS ENTERPRISE (DBE) ASSURANCES

1. Policy. It is the policy of the Department of Transportation (DOT) that disadvantaged business enterprises as defined in 49 CFR Part 23 shall have the maximum opportunity to participate in the performance of contracts financed in whole or in part with Federal funds under this agreement. Consequently, the DBE requirements of 49 CFR Part 23 applies to this agreement.

2. DBE Obligation. The Consultant agrees to ensure that disadvantaged business enterprises as defined in 49 CFR Part 23 have the maximum opportunity to participate in the performance of contracts and subcontracts financed in whole or in part with Federal funds provided under this agreement. In this regard, all Consultants shall take all necessary and reasonable steps in accordance with 49 CFR Part 23 to ensure that disadvantaged business enterprises have the maximum opportunity to compete for and perform contracts. Consultants shall not discriminate on the basis of race, color, national origin, or sex in the award and performance of DOT-assisted contracts.

J. OPEN ACCESS TO DOCUMENTS
(Reference: 49 CFR Part 18.36(i); FAA Order 5100.38)
(Public Act 90-0572 Section 20-65; Public Act 87-991)

The Consultant shall maintain, for a minimum of 5 years after the completion of the contract, adequate books, records, and supporting documents to verify the amounts, recipients, and uses of all disbursements of funds passing in conjunction with the contract; the contract and all books, records, and supporting documents related to the contract shall be available for review and audit by the Auditor General; and the Consultant agrees to cooperate fully with any audit

conducted by the Auditor General and to provide full access to all relevant materials. Failure to maintain the books, records, and supporting documents required by this Section shall establish a presumption in favor of the State for the recovery of any funds paid by the State under the contract for which adequate books, records, and supporting documentation are not available to support their purported disbursement.

K. CERTIFICATION OF CAPACITY TO CONTRACT
(Public Act 90-0572, Section 50-13)

It is unlawful for any person holding an elective office in this State, holding a seat in the General Assembly, or appointed to or employed in any of the offices of State government, or who is an officer or employee of the Illinois Building Authority or the Illinois Toll Highway Authority, or who is the wife, husband or minor child of any such person, to have or acquire any contract, or any direct pecuniary interest in any contract therein, whether for stationery, printing, paper or for any services, materials or supplies, which will be wholly or partially satisfied by the payment of funds appropriated by the General Assembly of the State of Illinois or in any contract of the Illinois Building Authority or the Illinois Toll Highway Authority. Payments made for a public aid recipient are not payments pursuant to a contract with the State within the meaning of this Section.

It is unlawful for any firm, partnership, association or corporation in which any such person is entitled to receive more than 7 1/2% of the total distributable income to have or acquire any such contract or direct pecuniary interest therein.

It is unlawful for any firm, partnership, association or corporation in which any such person together with his spouse or minor children is entitled to receive more than 15%, in the aggregate, of the total distributable income to have or acquire any such contract or direct pecuniary interest therein.

Nothing in this Section invalidates the provisions of any bond or other security hereto or hereafter offered for sale or sold by or for the State of Illinois.

This Section does not affect the validity of any contract made between the State and an officer or employee of the State or member of the General Assembly, his spouse, minor child or any combination of such persons, if that contract was in existence before his election or employment as such officer, member, or employee. Such a contract is void, however, if it cannot be completed within 6 months after such officer, member, or employee takes office, or is employed.

This Section does not apply to (1) a contract for personal services as a teacher or school administrator between a member of the General Assembly or his spouse, or a State officer or employee or his or her spouse, and any school district, public community, college district, the University of Illinois, Southern Illinois University or any institution under the control of the Board of Governors of State Colleges and Universities or under the control of the Board of Regents or (2) a contract for personal service of a wholly ministerial character including but not limited to services as a laborer, clerk, typist, stenographer, page, bookkeeper, receptionist or telephone switchboard operator, made by a spouse or minor child of an elective or appointive State officer or employee or of a member of the General Assembly or (3) payments made to a member of the General Assembly, a State officer or employee, his or her spouse or minor child acting as a foster parent, homemaker, advocate, or volunteer for or in behalf of a child or family served by the Department of Children and Family Services.

Any person convicted of a violation of this Section shall be guilty of a business offense and shall be fined not less than $1,000 nor more than $5,000.

The appropriate Certification of Capacity to Contract will be executed in Section III.X., of this agreement.

L. THE CONSULTANT SELECTION

(Reference: 49 CFR Part 18; FAA AC 5100-14D or latest revision)
(30 ILCS 535; IDOT-Aeronautics Administrative Bulletin: 2010-02)

The City of DeKalb hereby certifies that it
(Sponsor)
has completed the prescribed qualifications based consultant selection procedures.

The firm of (Crawford, Murphy and Tilly, Inc.) of (Springfield, IL) has
(Consultant) (Location)
been selected to provide the engineering services required for the project on:

July 10, 2017
(Date)

A copy of the executed Retainer Agreement identifying the project covered by this Agreement is included as ATTACHMENT U.

M. AMENDMENTS TO THE AGREEMENT

All effort recorded to document a claim for additional compensation must be delineated separately from the original scope of services with personnel, classifications, dates worked, rates, hours and services thoroughly detailed and clearly identified.

The Department shall be notified of potential amendment requests at the earliest possible opportunity once it has been determined that any of the following three circumstances may exist. Any amendments to the Agreement which increases the fee or the time of performance must contain one of the following written determinations (with support documentation) depending upon the circumstances of the change.

1. The undersigned determine that the circumstances which necessitate this change were not reasonably foreseeable at the time the contract was signed.

2. The undersigned determine that the circumstances which necessitate this change were not within the contemplation of the contract as signed.

3. The undersigned determine that this change is in the best interest of the state of Illinois and is authorized by law.

Date	Sign Name
	Print Name
	Title

Any professional services effort performed beyond the not-to-exceed limits expressed in Section II. Consultant Compensation, and for which a future amendment will be sought, will be performed under all Agreement provisions as the original contracted work. The dollar value of such effort is not considered approved for payment until review and approval by the Department.

N. CERTIFICATION OF CONSULTANT

(Public Act 90-0572 Section 50-5)

I hereby certify that I am the Vice President (title) and duly

authorized representative of the firm Crawford, Murphy & Tilly, Inc.,

whose address is 2750 West Washington Street, Springfield, IL 62702,
and that neither I nor the above firm I here represent has:

1. employed or retained for a commission, percentage, brokerage, contingent fee, or other consideration, any firm or person (other than a bona fide employee working solely for me or the above Consultant) to solicit or secure this Agreement,

2. agreed, as an express or implied condition for obtaining this contract, to employ or retain the services of any firm or person in connection with carrying out the Agreement, or

3. paid or agreed to pay to any firm, organization, or person (other than a bona fide employee working solely for me or the above Consultant) any fee, contribution, donation, or consideration of any kind for, or in connection with, procuring or carrying out the contract; except as here expressly stated (if any):

The firm certifies by execution:

1. it has not been convicted of bribery or attempting to bribe an officer or employee of the State of Illinois, nor has the firm made an admission of guilt of such conduct which is a matter of record, nor has an official, agent, or employee of the firm committed bribery or attempted bribery on behalf of the firm and pursuant to the direction or authorization of a responsible official of the firm, nor has the firm been barred from being awarded a contract or subcontract.
2. it has not been barred from contracting with a unit of state or local government as a result of a violation of the Criminal Code of 1961.

I acknowledge that this certification is to be furnished to the Federal Aviation Administration of the United States' Department of Transportation in connection with this contract involving participation of Airport Improvement Program (AIP) funds and is subject to applicable state and Federal laws, both criminal and civil.

July 10, 2023
Date

Douglas J. Klonowski, PE
Sign Name

Douglas J. Klonowski, PE
Print Name

Vice President
Title

O. FEDERAL TAXPAYER IDENTIFICATION NUMBER

The following statement is made under penalty of perjury:

"The Firm's correct Federal Taxpayer Identification Number is 37-0844662
. (I am) (This firm is) doing business as a (please check one):

____ Individual _____ Partnership __X__ Corporation

P. DISADVANTAGED BUSINESS ENTERPRISE (DBE) PARTICIPATION

(Reference: 49 CFR Part 26)

Contract Assurance (§26.13) - The Consultant or subconsultant shall not discriminate on the basis of race, color, national origin, or sex in the performance of this contract. The Consultant shall carry out applicable requirements of 49 CFR Part 26 in the award and administration of DOT assisted contracts. Failure by the Consultant to carry out these requirements is a material breach of this contract, which may result in the termination of this contract or such other remedy, as the recipient deems appropriate.

In keeping with the DBE plan adopted by the Sponsor, the Consultant shall take all necessary and reasonable steps to attain DBE participation in this contract.

The work for each subconsultant should be listed separately. If the subconsultant is being utilized to meet the project DBE goal, they must be prequalified in that category and certified as a DBE in that category. Please indicate that they are certified in that category. The certification list is available on the Department's website on the "Doing Business" menu under Small Business Enterprises and IL UCP directory http://www.dot.il.gov/ucp/ucp.html#DBE Directory. The percent of work is computed based on the individual subconsultant's work effort in each category

Firm Name: **N/A**

Subcontract Amount ($): **N/A**

Prequalification Category	% of Work	DBE Certification

If more than one subconsultant is being used, attach additional sheets.

NOTE: All final payment requests shall include a completed ATTACHMENT O - DBE Final Documentation or the complete information on the Consultant's format.

Q. DISCRIMINATION

(Reference: 49 CFR Part 21; FAA AC 150/5100-15A or latest revision)
(Executive Order 11246 of September 24, 1965; 41 CFR Part 60)

The Consultant agrees not to commit unlawful discrimination in employment in Illinois and further agrees to take affirmative action to ensure that no unlawful discrimination is committed.

R. DUES/FEES TO CLUBS WHICH DISCRIMINATE

(775 ILCS 25/2 Source: P.A. 85-909)

The Consultant of the business entity certifies that it is not prohibited from selling goods or services to the State of Illinois because it pays dues or fees on behalf of its employees or agent or subsidizes or otherwise reimburses them for payment of their dues or fees to any club which unlawfully discriminates.

S. CONFLICT OF INTEREST

(Public Act 90-0572 Section 50-13)

The Consultant agrees to comply with the provision of the Illinois Public Act prohibiting conflict of interest and all the terms, conditions and provisions of those Sections apply to this contract

and are made a part of this contract the same as though they were incorporated and included herein.

T. FELONY CONVICTION
(Public Act 90-5072 Section 50-10)

The Consultant certifies that if he/she or the business entity has been convicted of a felony, at least five years has passed since the completion of the sentence as of the contract date.

U. ILLINOIS HUMAN RIGHTS NUMBER

The Consultant must have an Illinois Department of Human Rights prequalification number, or have an application on file with the Illinois Department of Human Rights office at the State of Illinois Center, Suite 10-100, 100 West Randolph, Chicago, Illinois 60601 (refer to Department of Human Rights form).

(#IDHR PC-1/IL 442-0010). IDHR #____93788-00_____.

V. EDUCATIONAL LOAN DEFAULT
(5 ILCS 385).

The Consultant certifies that, if this agreement is with an individual or individuals, that he/she is not in default on an educational loan.

W. DRUG FREE WORKPLACE
(30 ILCS 580).

If the Consultant has 25 or more employees, the following certification shall apply and, by signing this document, the Consultant certifies as follows:

1. The Consultant certifies that he will provide a drug free workplace in compliance with the Drug Free Workplace Act ("Act"). Specifically, Consultant certifies he will do the following:

    a. Publish a statement:
        i. Notifying employees that the unlawful manufacture, distribution, dispensation, possession, or use of a controlled substance, including cannabis, is prohibited in the Consultants workplace.
        ii. Specifying the actions that will be taken against employees for violations of such prohibition.
        iii. Notifying the employee that, as a condition of employment on this agreement, the employee will:
            1) abide by the terms of the statement; and
            2) notify the employer of any criminal drug statute conviction for a violation occurring in the workplace no later than 5 days after such conviction.
    b. Establish a drug free awareness program to inform employees about:
        i. the dangers of drug abuse in the workplace;
        ii. the Consultant policy of maintaining a drug free workplace;
        iii. any available drug counseling, rehabilitation, and employee assistance programs; and
        iv. the penalties that may be imposed upon employees for drug violations.
    c. Give a copy of the statement described above to each employee engaged in the performance of the contract and post the statement in a prominent place in the workplace.
    d. Notify the State within 10 days after receiving notice under part (a)(3)(B) above from an employee or otherwise receiving actual notice of such conviction.

e. Impose a sanction on, or require the satisfactory participation in a drug abuse assistance or rehabilitation program by, any employee who is so convicted, as required by §5 of the Act.
f. Assist employees in selecting a course of action in the event drug counseling, treatment, and rehabilitation is required and indicate that a trained referral team is in place.
g. Make a good faith effort to continue to maintain a drug free workplace through implementation of §3 of the Act.

If an individual, the Consultant further certifies that he will not engage in the unlawful manufacture, distribution, dispensation, possession, or use of a controlled substance in the performance of the agreement.

X. CAPACITY TO CONTRACT

(Public Act 90-0572)

The Consultant certifies that the Corporation's certificate of Authority to do business in Illinois, is in good standing with the Secretary of State's Office.

CERTIFICATION OF CAPACITY TO CONTRACT

Public Act 90-0572 prohibits certain persons and entities from having or acquiring any contract with the State of Illinois and from having or acquiring any direct pecuniary interests in any contract with the State of Illinois, whether for materials, services, supplies, printing or stationery. This prohibition does not extend to certain contracts for personal services of a ministerial nature as provided for in the Act.

(Corporation)

The undersigned, being a duly authorized representatives of Crawford, Murphy and Tilly, Inc., a corporation, hereby certify that they have read Public Act 90-0572 Section 50-13 and that they have checked the records of the corporation and that no person who is entitled to receive individually more than 7 1/2% of the total distributable income of the corporation, or together with their spouse or minor child more than 15% of the total distributable income of the corporation, is (i) an elected State official, a member of the General Assembly, an appointed State officer, a State employee; (ii) an officer or employee of the Illinois Toll Highway Authority or of the Illinois Building Authority; or (iii) a spouse or a minor child of any such enumerated person.

10th day of July, AD, 2023

BY

Daniel L. Pape, PE, Aviation Group Mgr.
Printed Name & Title

Crawford, Murphy & Tilly, Inc.
Corporation

BY

Douglas J. Klonowski, PE, Vice President
Printed Name & Title

CERTIFICATION OF CAPACITY TO CONTRACT

Public Act 90-0572 prohibits certain persons and entities from having or acquiring any contract with the State of Illinois and from having or acquiring any direct pecuniary interests in any contract with the State of Illinois, whether for materials, services, supplies, printing or stationery. This prohibition does not extend to certain contracts for personal services of a ministerial nature as provided for in the Act.

(Partnerships and Non-Corporate Firms and Associations)

The undersigned, being each and every one of the partners/members/associates/(other) of

N/A, hereby certify on behalf of themselves individually, that they have read Public Act 90-0572 Section 50-13 and that (i) they are not an elected State official, a member of the General Assembly, an appointed State officer, a State employee; an officer or employee of the Illinois Toll Highway Authority or of the Illinois Building Authority; nor a spouse or minor child of any such enumerated person; or (ii) that they are such an enumerated person but that they are not entitled to receive individually more than 7 1/2% of the total distributable income of the partnership/firm/association, or together with their spouse or a minor child more than 15% of the total distributable income of the partnership/firm/association.

_____day of_____ , AD, 20_____

BY _____ BY _____

_____ _____

Printed Name & Title Printed Name & Title

d/b/a _____

(Name)

CERTIFICATION OF CAPACITY TO CONTRACT

Public Act 90-0572 prohibits certain persons and entities from having or acquiring any contract with the State of Illinois and from having or acquiring any direct pecuniary interests in any contract with the State of Illinois, whether for materials, services, supplies, printing or stationery. This prohibition does not extend to certain contracts for personal services of a ministerial nature as provided for in the Act.

(Individual Consultants)

I, _____**N/A**_____,
(Name)

hereby certify that I have read Public Act 90-0572 Section 50-13 and I further certify (i) that I am not an elected State official, a member of the General Assembly, an appointed State officer, a State employee; (ii) that I am not an officer or employee of the Illinois Toll Highway Authority or of the Illinois Building Authority; and (iii) that I am not a spouse or a minor child of any such official, member, officer or employee.

____day of_____, AD, 20_____

BY _____

_____
Printed Name & Title

d/b/a _____
(Name)

Y. CERTIFICATION REGARDING LOBBYING

(Reference: 49 CFR Part 20, Appendix A)

Certification for Contracts, Grants, Loans and Cooperative Agreements.

The Consultant certifies compliance with Section 319 of Public Law 101-102 and to the best of his or her knowledge and belief, that:

1. No Federal appropriated funds have been paid or will be paid, by or on behalf of the undersigned, to any person for influencing or attempting to influence an officer or employee of any agency, a Member of Congress, an Officer or employee of Congress, or an employee of a Member of Congress in connection with the awarding of any Federal contract, the making of any Federal grant, the making of any Federal loan, the entering into of any cooperative agreement, and the extension, continuation, renewal, amendment, or modification of any Federal contract, grant, loan, or cooperative agreement.

2. If any funds other than Federal appropriated funds have been paid or will be paid to any person for influencing or attempting to influence an officer or employee of any agency, a Member of Congress, an officer or employee of Congress, or an employee of a Member of Congress in connection with this Federal contract, grant, loan, or cooperative agreement, the undersigned shall complete and submit Standard Form-LLL, "Disclosure Form to Report Lobbying", in accordance with its instructions.

3. The undersigned shall require that the language of this certification be included in the award documents for all sub-awards at all tiers (including subcontracts, sub-grants, and contracts under grants, loans, and cooperative agreements) and that all sub-recipients shall certify and disclose accordingly.

   This certification is a material representation of fact upon which reliance was placed when this transaction was made or entered into. Submission of this certification is a prerequisite for making or entering into this transaction imposed by Section 1352, Title 31, US Code. Any person who fails to file the required certification shall be subject to a civil penalty of not less than $10,000 and not more than $100,000 for each such failure.

Z. INTERNATIONAL BOYCOTT

(Applicable to contracts in excess of $10,000):

The Consultant certifies that neither it nor any substantially-owned affiliated company is participating or shall participate in an international boycott in violation of the provisions of the U.S. Export Administration Act of 1979 or the regulations of the U.S. Department of Commerce promulgated under that Act. The Consultant makes the certification set forth in Section 5 of the International Anti-Boycott Certification Act.

AA. NON-APPROPRIATION CLAUSE

Obligations of the State will cease immediately without penalty or further payment being required in any fiscal year the Illinois General Assembly fails to appropriate or otherwise make available sufficient funds for payment of this Agreement.

BB. DEBT CERTIFICATION

The Consultant certifies that it, or any affiliate, is not barred from being awarded a contract under 30 ILCS 500/50-11 and 50-12. The Consultant further acknowledges that the contracting State agency may declare the contract void if the preceding certification is false or if the contractor, or any affiliate, is determined to be delinquent in the payment of *any* debt to the State during the term of the contract.

CC. GOODS FROM CHILD LABOR ACT

The Consultant certifies in accordance with Public Act 94-0264 tha1 no foreign made equipment, materials, or supplies furnished to the State under the contract have been produced in whole or in part by the labor of any child under the age of 12.

DD. QUALIFICATION BASED SELECTION ACT

(Reference: 49 CFR Part 18.36; FAA Order 5100.38; FAA AC 150/5100-14 (latest))

The parties hereby certify that there was compliance with the provisions of the State of Illinois' Architectural, Engineering and Land Surveying Qualifications Based Selection Act, Chapter 30 ILCS 535 in the procurement of the services covered by this Agreement.

EE. CERTIFICATION REGARDING DEBARMENT, SUSPENSION, INELIGIBILITY AND VOLUNTARY EXCLUSION

(Reference: 49 CFR Part 29; FAA Order 5100.38)

The Consultant certifies, by submission of this proposal or acceptance of this contract, that neither it nor its principals is presently debarred, suspended, proposed for debarment, declared ineligible, or voluntarily excluded from participation in this transaction by any Federal department or agency. It further agrees by submitting this Agreement that it will include this clause without modification in all lower tier transactions, solicitations, proposals, contracts, and subcontracts. Where the Consultant or any lower tier participant is unable to certify to this statement, it shall attach an explanation to this solicitation/proposal.

FF. RIGHTS TO INVENTIONS

(Reference: 49 CFR Part 18.36(i)(8); FAA Order 5100.38)

All rights to inventions and materials generated under this contract are subject to regulations issued by the FAA and the Sponsor of the Federal grant under which this contract is executed.

GG. TRADE RESTRICTION CLAUSE

(Reference: 49 CFR Part 30.13; FAA Order 5100.38)

The Consultant or subconsultant, by submission of an offer and/or execution of a contract, certifies that it:

1. is not owned or controlled by one or more citizens of a foreign country included in the list of countries that discriminate against U.S. firms published by the Office of the United States Trade Representative (USTR);

2. has not knowingly entered into any contract or subcontract for this project with a person that is a citizen or national of a foreign country on said list, or is owned or controlled directly or indirectly by one or more citizens or nationals of a foreign country on said list;

3. has not procured any product nor subcontracted for the supply of any product for use on the project that is produced in a foreign country on said list.

Unless the restrictions of this clause are waived by the Secretary of Transportation in accordance with 49 CFR 30.17, no contract shall be awarded to a Consultant or subconsultant who is unable to certify to the above. If the Consultant knowingly procures or subcontracts for the supply of any product or service of a foreign country on said list for use on the project, the Federal Aviation Administration may direct through the Sponsor cancellation of the contract at no cost to the Government.

Further, the Consultant agrees that, if awarded a contract resulting from this solicitation, it will incorporate this provision for certification without modification in each contract and in all lower

tier subcontracts. The Consultant may rely on the certification of a prospective subconsultant unless it has knowledge that the certification is erroneous.

The Consultant shall provide immediate written notice to the sponsor if the Consultant learns that its certification or that of a subconsultant was erroneous when submitted or has become erroneous by reason of changed circumstances. The subconsultant agrees to provide written notice to the contractor if at any time it learns that its certification was erroneous by reason of changed circumstances.

This certification is a material representation of fact upon which reliance was placed when making the award. If it is later determined that the Consultant or subconsultant knowingly rendered an erroneous certification, the Federal Aviation Administration may direct through the Sponsor cancellation of the contract or subcontract for default at no cost to the Government.

Nothing contained in the foregoing shall be construed to require establishment of a system of records in order to render, in good faith, the certification required by this provision. The knowledge and information of a contractor is not required to exceed that which is normally possessed by a prudent person in the ordinary course of business dealings.

This certification concerns a matter within the jurisdiction of an agency of the United States of America and the making of a false, fictitious, or fraudulent certification may render the maker subject to prosecution under Title 18, United States Code, Section 1001.

HH. BREACH OF CONTRACT TERMS
(Reference: 49 CFR Part 18.36)

Any violation or breach of terms of this contract on the part of the Consultant or their subconsultants may result in the suspension or termination of this contract or such other action that may be necessary to enforce the rights of the parties of this agreement. The duties and obligations imposed by the Contract Documents and the rights and remedies available thereunder shall be in addition to and not a limitation of any duties, obligations, rights and remedies otherwise imposed or available by law.

Policies and procedures for procurement of professional services are established in Federal Regulation Title 49 CFR Part 18, Uniform Administrative Requirements for Grants and Cooperative Agreements. The Airport and Airway Improvement Act (AAIA) of 1982, as amended, serves as the enabling legislation. The parties agree that these policies and procedures have been followed.

IN WITNESS WHEREOF, the parties hereto have affixed their hand and seals at

DeKalb	,Illinois, this	July 10	, 2023.
(city)		(date)	(year)

ATTEST:

(SEAL)

CITY OF DEKALB STATE OF ILLINOIS

City of DeKalb
(Sponsor Name)

36-6005843
(Federal Employee's Identification Number)

BY

Ruth A. Scott, Executive Assistant
Printed Name & Title

BY

Bill Nicklas, City Manager
Printed Name & Title

ATTEST:

(SEAL)

CRAWFORD, MURPHY & TILLY, INC. CORPORATE SEAL 1963 DELAWARE

CRAWFORD, MURPHY & TILLY, INC.
(Consultant Name)

37-0844662
(Federal Employee's Identification Number)

BY

Daniel L. Pape, PE, Aviation Group Mgr.
Printed Name & Title

BY

Douglas J. Klonowski, PE, Vice President
Printed Name & Title

LIST OF ATTACHMENTS

ATTACHMENT A / A1 –	**PRELIMINARY ASSESSMENT AND SCHEMATIC DESIGN PHASE SERVICES** ESTIMATE OF COSTS / SALARY EXPENSES
ATTACHMENT B / B1 –	**DESIGN PHASE SERVICES** ESTIMATE OF COSTS / SALARY EXPENSES
ATTACHMENT C / C1 –	**CONSTRUCTION PHASE SERVICES** ESTIMATE OF COSTS / SALARY EXPENSES
ATTACHMENT D / D1 –	**PLANNING AND SPECIAL SERVICES** ESTIMATE OF COSTS / SALARY EXPENSES
ATTACHMENT E –	**ENGINEERING REPORT (General Guidance)**
ATTACHMENT F –	**RESIDENT ENGINEER'S DIARY (Standard Format)**
ATTACHMENT G –	**COST PLUS FIXED PAYMENT INVOICE (Standard Format)**
ATTACHMENT H –	**LUMP SUM INVOICE (Standard Format)**
ATTACHMENT I –	**EFFORT DETAIL BREAKDOWN (Standard Format)**
ATTACHMENT J –	**TESTING SCHEDULE**
ATTACHMENT K –	**TESTING RATES & COST SUMMARY**
ATTACHMENT L –	**SUMMARY OF PAYROLL BURDEN AND FRINGE COSTS**
ATTACHMENT M –	**SUMMARY OF OVERHEAD AND INDIRECT COSTS**
ATTACHMENT N –	**PROJECT CERTIFICATION**
ATTACHMENT O –	**DBE FINAL DOCUMENTATION**
ATTACHMENT P –	**PROJECT SKETCH**
ATTACHMENT Q –	**PROJECT LETTING SCHEDULE**
ATTACHMENT R –	**OP&P PROGRAM LETTER**
ATTACHMENT S –	**CURRENT IDOT PROVISIONAL PAYROLL BURDEN / FRINGE EXPENSE AND GENERAL / ADMINISTRATIVE EXPENSE RATE LETTER**
ATTACHMENT T –	**CONSULTANT'S PRELIMINARY ESTIMATE OF PROBABLE CONSTRUCTION COSTS**
ATTACHMENT U –	**RETAINER AGREEMENT**

ATTACHMENT A

PRELIMINARY ASSESSMENT AND SCHEMATIC DESIGN PHASE SERVICES

ESTIMATE OF COSTS

Category	Amount ($)	
1. Direct Salary Costs	_____	(ATTACHMENT A-1)
2. Labor and General and Administrative Overhead[1]	_____	
3. Direct Nonsalary Expenses		
Lodging[2,3]	_____	
Meals/Per Diem[2,3]	_____	
Transportation[2]	_____	
Materials & Supplies	_____	
Printing	_____	
CADD time[4]	_____	
Other Costs (excluding outside services)	_____	
4. Fixed Payment[5]	_____	
5. Outside Services	_____	
Lump Sum **Total Amount Not to Exceed**	$ _____	

Estimated cost of total professional design phase services from TIP: $_____

NOTES:

1/ A letter from IDOT with approval or provisional payroll burden / fringe and general / administrative expense rates must be attached (ATTACHMENT S) for verification of rates.
2/ Current approved rates established by State of Illinois - Governors Travel Control Board.
3/ Shall not be used in calculation of fixed payment amount.
4/ Maximum CADD rate shall be $15.00/hour.
5/ Fixed Payment (Profit) = (14.5%) x [Direct Salary Costs + (OH&B) x (Direct Salary Costs) + Transportation + Materials & Supplies + Printing + CADD time + Other Costs (excluding outside services)].

ATTACHMENT A-1

PRELIMINARY ASSESSMENT AND SCHEMATIC DESIGN PHASE SERVICES

ESTIMATE OF SALARY EXPENSES

Classification*	Hours	$Rate/Hour	Cost ($)
Principal			
Vice Principal			
Project Manager			
Senior Project Engineer			
Senior Project Architect			
Project Engineer			
Project Architect			
Senior Engineer			
Senior Architect			
Engineer			
Planner			
Registered Land Surveyor			
Land Surveyor			
Senior Engineering Technician			
Engineering Technician			
Engineering Assistant			
CADD/Draftsman/Technician			
Clerical			
Total	(hours)	(average)	$ (total direct salary costs) (ATTACHMENT A)

*Classifications may be adjusted as per Consultant's work force.

ATTACHMENT B

DESIGN PHASE SERVICES

ESTIMATE OF COSTS

Category	Amount ($)	
1. Direct Salary Costs	_____	(ATTACHMENT B-1)
2. Labor and General and Administrative Overhead[1]	_____	
3. Direct Nonsalary Expenses		
Lodging[2,3]	_____	
Meals/Per Diem[2,3]	_____	
Transportation[2]	_____	
Materials & Supplies	_____	
Printing	_____	
CADD time[4]	_____	
Other Costs (excluding outside services)	_____	
4. Fixed Payment[5]	_____	
5. Outside Services	_____	
Cost Plus Fixed Payment **Total Amount Not to Exceed**	**$** _____	
OR		
Lump Sum **Total Amount Not to Exceed**	$ _____	

Estimated Construction Cost: $_____ (ATTACHMENT T)

Attach a sketch labeled ATTACHMENT P in sufficient detail to clearly delineate the proposed areas of work.

NOTES:

1/ A letter from IDOT with approval or provisional payroll burden / fringe and general / administrative expense rates must be attached (ATTACHMENT S) for verification of rates.
2/ Current approved rates established by State of Illinois - Governors Travel Control Board.
3/ Shall not be used in calculation of fixed payment amount.
4/ Maximum CADD rate shall be $15.00/hour.
5/ Fixed Payment (Profit) = (14.5%)x[Direct Salary Costs + (OH&B)x(Direct Salary Costs) + Transportation + Materials & Supplies + Printing + CADD time + Other Costs (excluding outside services)].

ATTACHMENT B-1

DESIGN PHASE SERVICES

ESTIMATE OF SALARY EXPENSES

Classification*	Hours	$Rate/Hour	Cost ($)
Principal			
Vice Principal			
Project Manager			
Senior Project Engineer			
Senior Project Architect			
Project Engineer			
Project Architect			
Senior Engineer			
Senior Architect			
Engineer			
Planner			
Registered Land Surveyor			
Land Surveyor			
Senior Engineering Technician			
Engineering Technician			
Engineering Assistant			
CADD/Draftsman/Technician			
Clerical			
Total	(hours)	(average)	$ (total direct salary costs) (ATTACHMENT B)

*Classifications may be adjusted as per Consultant's work force.

ATTACHMENT C

CONSTRUCTION PHASE SERVICES

ESTIMATE OF COSTS

DeKalb Taylor Municipal Airport

Remove & Replace a Portion of the Aircraft Parking Apron

Attachment C

Construction Phase

ESTIMATE OF COSTS

	CATEGORY			AMOUNT
1	Direct Salary Costs			$40,116.43
2	Labor and General and Administrative Overhead[1]	54.76%		$21,967.76
3	Direct Nonsalary Expenses	117.50%		$47,136.81
	Lodging[2,3]		$	-
	Meals/Per Diem[2,3]		$	-
	Transportation[2]		$	3,110.00
	Materials & Supplies		$	-
	Printing		$	136.00
	CADD time[4]		$	-
	Other Costs (Excluding outside Services)		$	55.00
4	Fixed Payment[5]			$16,300.00
5	Outside Services/Subconsultants			$17,600.00
	TSC Inc. (Material Testing)	$17,600.00		
	Cost Plus Fixed Payment **Total Amount Not to Exceed**			$146,422.00
	Or		**Use =**	$146,400.00

NOTES:

1/ A letter from IDOT with approval or provisional payroll burden / fringe and general / administrative expense rates must be attached (ATTACHMENT S) for verification of rates.

2/ Current approved rates established by State of Illinois - Governors Travel Control Board.

3/ Shall not be used in calculation of fixed payment amount.

4/ Maximum CADD rate shall be $15.00/hour.

5/ Fixed Payment (Profit) = (14.5%) x [Direct Salary Costs + (OH&B) x (Direct Salary Costs) + Transportation + Materials & Supplies + Printing + CADD time + Other Costs (excluding outside services)].

ATTACHMENT C-1

CONSTRUCTION PHASE SERVICES

ESTIMATE OF SALARY EXPENSES

CLASSIFICATION	TIME REQUIRED (HOURS)	HOURLY WAGE	SALARY EXPENSE
PRINCIPAL	0	$86.00	$0.00
PROJECT ENGINEER II	55	$79.33	$4,363.15
PROJECT ARCHITECT II	0	$66.69	$0.00
PROJECT MANAGER II	8	$75.74	$605.92
PROJECT ENVIRONMENTAL SCIENTIST II	0	$74.85	$0.00
PROJECT STRUCTURAL ENGINEER II	0	$84.53	$0.00
PROJECT ENGINEER I	0	$63.00	$0.00
PROJECT MANAGER I	0	$60.91	$0.00
PROJECT ENVIRONMENTAL SCIENTIST I	0	$64.78	$0.00
PROJECT STRUCTURAL ENGINEER I	0	$62.98	$0.00
SENIOR ENGINEER I	535	$46.69	$24,979.15
SENIOR ARCHITECT II	0	$55.21	$0.00
TECHNICAL MANAGER II	0	$53.60	$0.00
SENIOR PLANNER I	0	$44.97	$0.00
GIS SPECIALIST	0	$44.12	$0.00
ENVIRONMENTAL SCIENTIST III	0	$49.30	$0.00
SENIOR STRUCTURAL ENGINEER II	0	$61.73	$0.00
SENIOR STRUCTURAL ENGINEER I	0	$46.79	$0.00
ENGINEER I	194	$35.40	$6,867.60
SENIOR ARCHITECT I	0	$35.77	$0.00
ENVIRONMENTAL SCIENTIST II	0	$43.08	$0.00
STRUCTURAL ENGINEER I	0	$35.30	$0.00
PLANNER I	0	$35.45	$0.00
ENVIRONMENTAL SCIENTIST I	0	$29.55	$0.00
TECHNICAL MANAGER I	0	$31.58	$0.00
LAND SURVEYOR	8	$47.34	$378.72
SENIOR TECHNICIAN II	53	$55.13	$2,921.89
SENIOR TECHNICIAN I	0	$44.22	$0.00
TECHNICIAN II	0	$36.46	$0.00
TECHNICIAN I	0	$30.78	$0.00
PROJECT ADMINISTRATIVE ASSISTANT	0	$28.99	$0.00
ADMINISTRATIVE/ACCOUNTING ASSISTANT	0	$22.72	$0.00
		AVERAGE	
TOTAL	**853**	**$47.03**	**$40,116.43**

*Classifications may be adjusted as per Consultant's work force.

DeKalb Taylor Municipal Airport

Remove & Replace a Portion of the Aircraft Parking Apron

Attachment C-2

Construction Phase

Estimated Cost Breakdown Items 4, 5, 6 & 7

Item						
4	**MATERIALS AND SUPPLIES**					
	Surveying Supplies (paint, lathe, stakes, etc)			$ -		
	Drafting Media			$ -		
	Misc. Equipment and Direct Project Supplies			$ -		
			Sub-Total			**$ -**
5	**TRAVEL**					
	Travel Reimbursement	4000 miles@	$ 0.655	$2,620.00		
	Vehicle Days	6 days@	$ 65.00	$ 390.00		
	Other Subsistence & Tolls			$ 100.00		
			Sub-Total			**$ 3,110.00**
6	**PRINTING**					
	Full Size Prints (18 sheets - 5 sets)	40 sheets@	$ 2.40	$ 96.00		
	Photo-copies	200 sheets@	$ 0.20	$ 40.00		
			Sub-Total			**$ 136.00**
7	**OTHER COSTS (EXCLUDING OUTSIDE SERVICES)**					
	Photos/Developing			$ -		
	Direct Project Shipping Expense			$ 55.00		
	Unassigned Misc Project Direct Expense			$ -		
			Sub-Total			**$ 55.00**
						$ 3,301.00

DeKalb Taylor Municipal Airport

Remove & Replace a Portion of the Aircraft Parking Apron

Attachment C-3 Construction Phase Engineering
Cost Estimate of Consultant Services (By Task)

Phase #	Element of Work	Hours	Ave Hourly Rate	Total Direct Labor	% of Total Labor	Principal	Project Engineer II	Project Manager II	Senior Engineer I	Engineer I	Technical Manager I	Land Surveyor	Senior Technician II	Technician II	Project Administrative Assistant
	Construction Phase														
6000	Office Engineering (per C.1)	94	$61.70	$5,799.82	14.46%	0	40	8	33	12	0	0	1	0	0
6001	*Project Management (2 hr/week)*	16	$67.09	$1,073.44	2.68%	0	10	0	6	0	0	0	0	0	0
6002	*Airport and IDA Coordination (1 hour/week)*	8	$79.33	$634.64	1.58%	0	8	0	0	0	0	0	0	0	0
6003	*Periodic Site Reviews (1 visit every 2 weeks - 4 hrs per visit)*	16	$79.33	$1,269.28	3.16%	0	16	0	0	0	0	0	0	0	0
6004	*Subconsultant Coordination and Management*	8	$46.69	$373.52	0.93%	0	0	0	8	0	0	0	0	0	0
6005	*Shop Drawing/Materials/Mix Design Review and IDA Coordination (approx. 2 hours/item - 12 items plus support staff time) (per C.1.a)*	28	$56.43	$1,579.96	3.94%	0	4	8	8	8	0	0	0	0	0
6006	*Contractor schedule review and IDA coordination*	4	$46.69	$186.76	0.47%	0	0	0	4	0	0	0	0	0	0
6007	*Respond to Request for Information and Supplemental Sketches (per C.1.b)*	5	$43.86	$219.31	0.55%	0	0	0	2	2	0	0	1	0	0
6008	*Correspondence with contractor, IDA and/or FAA*	8	$52.03	$416.22	1.04%	0	2	0	4	2	0	0	0	0	0
6009	*Coordination of NOTAM's etc. with Airport Operations*	1	$46.69	$46.69	0.12%	0	0	0	1	0	0	0	0	0	0
6010	*Technical Assistance during grant close-out*	0	$0.00	$0.00	0.00%	0	0	0	0	0	0	0	0	0	0
6020	PreConstruction Preparation & Miscellaneous Advance Work	32	$50.62	$1,619.72	4.04%	0	8	0	12	12	0	0	0	0	0
6030	Permitting/Agency/Code Related Coordination	8	$41.05	$328.36	0.82%	0	0	0	4	4	0	0	0	0	0
6040	Surveying/Layout/Project Control	16	$51.24	$819.76	2.04%	0	0	0	0	0	0	8	8	0	0
6050	Resident Project Engineer and Assistants (per C.2)	574	$44.96	$25,805.66	64.33%	0	0	0	430	112	0	0	32	0	0
6051	***Full Time** Daily Construction Observation (R.E. Est. 10 hrs. daily for 40 Working/Calendar days; Plus 1 Constr. Observers during paving; Parttime inspector for Measurement and Qty Checks - one day/2 weeks)*	520	$45.30	$23,555.36	58.72%	0	0	0	400	88	0	0	32	0	0
6052	*Perform Wage Rate Interviews & Follow-up Info. Gather*	0	$0.00	$0.00	0.00%	0	0	0	0	0	0	0	0	0	0
6053	*Monitor & Update Grant Financial Status (APMS) or Other Project Cost Allocations*	0	$0.00	$0.00	0.00%	0	0	0	0	0	0	0	0	0	0
6054	*Monitor DBE Participation*	0	$0.00	$0.00	0.00%	0	0	0	0	0	0	0	0	0	0
6055	*Materials Review/Certification and Coordination (per C.1.d)*	54	$41.67	$2,250.30	5.61%	0	0	0	30	24	0	0	0	0	0
6060	Quality Assurance Engineer Effort - (Pre-pave meetings, test batch/strip) (610 Concrete Coordination)	24	$41.05	$985.08	2.46%	0	0	0	12	12	0	0	0	0	0
6070	Utility Coordination, Relocation, Protection and Effort	8	$41.05	$328.36	0.82%	0	0	0	4	4	0	0	0	0	0
6080	Final Inspection and Follow-up Action (per C.2.d)	30	$48.70	$1,461.06	3.64%	0	6	0	12	12	0	0	0	0	0
6090	Punchlist Completion/Project Closeout	16	$41.05	$656.72	1.64%	0	0	0	8	8	0	0	0	0	0
6100	Development of Record Drawings (per C.1.c)	12	$45.74	$548.88	1.37%	0	0	0	4	4	0	0	4	0	0
6110	Construction Documentation Close Out/Audit Rev.	39	$45.21	$1,763.01	4.39%	0	1	0	16	14	0	0	8	0	0
	Totals	**853**	**$47.03**	**$40,116.43**	**100.00%**	**0**	**55**	**8**	**535**	**194**	**0**	**8**	**53**	**0**	**0**

ATTACHMENT D

PLANNING AND SPECIAL SERVICES

Category	Amount ($)	
1. Direct Salary Costs	_____	(ATTACHMENT D-1)
2. Labor and General and Administrative Overhead[1]	_____	
3. Direct Nonsalary Expenses		
Lodging[2,3]	_____	
Meals/Per Diem[2,3]	_____	
Transportation[2]	_____	
Materials & Supplies	_____	
Printing	_____	
CADD time[4]	_____	
Other Costs (excluding outside services)	_____	
4. Fixed Payment[5]	_____	
5. Outside Services	_____	

Cost Plus Fixed Payment
Total Amount Not to Exceed $ _____

OR

Lump Sum
Total Amount Not to Exceed $ _____

NOTES:

1/ A letter from IDOT with approval or provisional payroll burden / fringe and general / administrative expense rates must be attached (ATTACHMENT S) for verification of rates.

2/ Current approved rates established by State of Illinois - Governors Travel Control Board.

3/ Shall not be used in calculation of fixed payment amount.

4/ Maximum CADD rate shall be $15.00/hour.

Fixed Payment (Profit) = (14.5%)x[Direct Salary Costs + (OH&B)x(Direct Salary Costs) + Transportation + Materials & Supplies + Printing + CADD time + Other Costs (excluding outside services)].

ATTACHMENT D-1

PLANNING AND SPECIAL SERVICES

ESTIMATE OF SALARY EXPENSES

Classification*	Hours	$Rate/Hour	Cost ($)
Principal			
Vice Principal			
Project Manager			
Senior Project Engineer			
Senior Project Architect			
Project Engineer			
Project Architect			
Senior Engineer			
Senior Architect			
Engineer			
Planner			
Registered Land Surveyor			
Land Surveyor			
Senior Engineering Technician			
Engineering Technician			
Engineering Assistant			
CADD/Draftsman/Technician			
Clerical			
Total	(hours)	(average)	$ (total direct salary costs) (ATTACHMENT D)

*Classifications may be adjusted as per Consultant's work force.

ATTACHMENT E

ENGINEERING REPORT (General Guidance)

The Engineering Report is to be prepared by the Consultant and submitted to the Sponsor and/or Department, if possible, prior to starting Plans and Specifications. The Report shall include, at a minimum, a discussion of the following elements which are applicable and any other elements deemed necessary by the Department:

1. Introduction, project overview and consistency with approved ALP, justification, scope, authorization, funding, required environmental actions and schedule.

2. Investigations and evaluations, including pavement history, PCI information, topographic survey data, soil sampling and testing, boring logs, CBR test results, subgrade stabilization considerations, and seasonal frost issues.

3. Pavement design considerations, including pavement types and/or alternates; any unusual design and reasons therefore, selection of design CBR value, traffic distribution, and reported pavement strength.

4. Rehabilitation, strengthening and/or overlay work shall be detailed as to the type of work required, including existing pavement conditions, material selection considerations, thickness design and economic analysis.

5. Construction features which vary from FAA criteria should be identified including the problem(s) facts, alternative solutions, and/ or desired solution. Is the desired solution the most economical?

6. Items such as materials sources, soils, drainage, water for construction, cost of land vs. development, contractor resources, available finances, and stage development. The report should say how these factors affected the decisions made by the Consultant in the design.

7. Explanation of drainage design criteria including explanation of drainage districts data INPUT and off-site drainage impact on design. Include drainage calculations and modeling.

8. Special considerations for local circumstances such as available material, equipment, contractors, and airport sponsored events.

9. Consultant's choice of options for the lighting design; similar explanation of choices made for the drainage, fencing, turfing and marking, including decisions regarding cover crop seeding.

10. Approach conditions which will result from proposed work and comparison with FAA criteria.

11. Analysis of potential RSA determination (if applicable).

12. Development of PCN for runway strengthening and rehabilitation projects.

13. Description of non-AIP work and quantity separation from AIP eligible items.

14. Identify work to be done by others such as utility companies and airports sponsor forces.

15. The Consultant's preliminary estimate of construction costs, fees and expenses shall be included.

16. A discussion of project safety concerns (per guidance explained in FAA AC 150/5370-2F (or current) Operational Safety on Airports during Construction) shall be included.

17. A discussion of project phasing / sequencing and estimate of construction calendar days shall be included.

ATTACHMENT F

Illinois Department of Transportation

Resident Engineer's Diary

Airport: _____ Date: _____

Contractor: _____ IL Project No.: _____ AIP Project _____

Temperature _____ Wind: _____ Weather Conditions: _____

Status: ☐ Active ☐ Suspended Jobsite Conditions: ☐ Workable ☐ Non-workable

Controlling Item: _____

Workforce

Consultant (# of people, hours): _____

Contractor (# of people, equipment, hours):

Daily Work

Pay items / General Location:

Instructions to Contractor / Unusual Events:

Verbal Approvals (official & item): _____

Additional Work (change order, etc.): _____

Official Visitors: _____

Materials Deliveries (material, quantity, quality) / Testing (test, location, corrective action):

Other:

Calendar Days: _____ Awarded
_____ Charged
_____ Remaining

DBE Onsite? (yes or no)
Own forces used? (yes or no)
Own equipment used? (yes or no)

Submitted _____ Firm: _____ Date: _____

ATTACHMENT G

COST PLUS FIXED PAYMENT INVOICE (Standard Format)

To: _____, Chief Engineer
Illinois Department of Transportation
Division of Aeronautics
Abraham Lincoln Capital Airport
1 Langhorne Bond Drive
Springfield, IL 62707-8415

From (Firm): _____
Address: _____
Telephone No.: _____
Invoice # _____ Date: _____
[ ] Partial [ ] Final

Attn: _____, Section Chief

Airport: _____ Municipality: _____, IL
Illinois Project No. _____ Federal Project No. _____
Notice to Proceed Date (OP&P Program Letter or Sponsor Authorization): _____
Per A/E Agreement/Amendment dated: _____

Services (Check only those services pertaining to invoice):

[ ] Preliminary Assessment and Schematic Design Phase
[ ] Design Phase
[ ] Construction Phase
[ ] Planning and Special Services
[ ] Other ( )
[ ] Amendment(s)

Service Dates: For Services Rendered From (date): _____ To (date): _____

Period	To Date	Billing
(1) Direct Salaries	$_____	$_____
Include all information per ATTACHMENT I (EFFORT DETAIL BREAKDOWN)		
(2) Labor and General and Administrative Overhead (_____%)	$_____	$_____
(3) Direct Non-Salary Expenses (OT Premium)	$_____	$_____
Support documentation must accompany all payment requests of direct non-salary expenses.		
(4) Profit – (Fixed Payment $_____ x ____% Complete)	$_____	$_____
(5) SUBTOTAL (1) – (4)	$_____	$_____
(6) Outside Services	$_____	$_____

TOTAL AMOUNT EARNED TO DATE: (5) + (6) ..... $_____
Maximum Payable (per Engineering Agreement) ..... $_____
Estimated total cost to complete project (for billings after 50%) ..... $_____
Less Total Amount(s) Previously Invoiced ..... $_____
PAYMENT DUE THIS INVOICE ..... $_____

I certify that to the best of my knowledge, the percent of work shown as complete on this Invoice is correct.

By: _____ _____
Printed Name and Title

Department Approval
By: _____ _____
Printed Name and Title

NOTE: This format is for general information. The Consultant's format containing essential data may be acceptable.

ATTACHMENT H

LUMP SUM INVOICE (Standard Format)

To: _____, Chief Engineer
Illinois Department of Transportation
Division of Aeronautics
Abraham Lincoln Capital Airport
1 Langhorne Bond Drive
Springfield, IL 62707-8415

From (Firm): _____
Address: _____
Telephone No.: _____
Invoice # _____ Date: _____
[ ] Partial [ ] Final

Attn: _____, Section Chief

Airport: _____ Municipality: _____, IL
Illinois Project No. _____ Federal Project No. _____
Notice to Proceed Date (OP&P Program Letter or Sponsor Authorization): _____
Per A/E Agreement/Amendment dated: _____

Services (Check only those services pertaining to invoice):

[ ] Preliminary Assessment and Schematic Design Phase
[ ] Design Phase
[ ] Construction Phase
[ ] Planning and Special Services
[ ] Other ( )
[ ] Amendment(s)

Service Dates:
For Services Rendered From (date): _____ To (date): _____

(1) Lump Sum (LS) Fee (or Maximum Payable per Engineering Agreement)..$_____

(2) Percent of Work Complete: _____%

(3) Fee Earned to Date: (LS $_____ x _____% Complete)....$_____

(4) Less Total Amount(s) Previously Invoiced.....$_____

(5) PAYMENT DUE THIS INVOICE.....$_____

I certify that to the best of my knowledge, the percent of work shown as complete on this Invoice is correct.

By: _____ _____
Printed Name and Title

Department Approval

By: _____ _____
Printed Name and Title

NOTE: This format is for general information. The Consultant's format containing essential data may be acceptable.

ATTACHMENT I

EFFORT DETAIL BREAKDOWN (Standard Format)

Page ____ of ____ Pages

Airport: _____
Illinois Project No. _____
Federal Project No. _____

Invoice No. _____
Date: _____

ENGINEERING COSTS BREAKDOWN

Agreement Paragraph Governing Services	Service Performed	Date Performed	Employee's Name and Classification	Hours	Rate	Amount

Total _____

ENGINEERING FIRM

Name _____

Address _____

_____

_____

Prepared By _____

Date _____

NOTE:
This format is for general information; however the consultant's format containing the essential data may be acceptable.

ATTACHMENT J

TESTING SCHEDULE – *See Testing Proposal*

Testing Schedule - anticipated for the Preliminary Assessment and Schematic Design, Design and Construction phases of the project. See subconsultant work scope

Description	Approximate Number
ASTM D 421, Particle Size Analysis	
ASTM D 2217	
ASTM C 422	
ASTM D 698, Moisture-Density Relations of Soil	
ASTM D 1557	
ASTM D 427, Shrinkage Factors of Soil	
ASTM D 2434, Permeability of Granular Soils	
AASHTO T 194, Determination of Organic Materials in Soils by Wet Combustion	
ASTM D 1883, Bearing Ratio of Laboratory Compacted Soil	
AASHTO T 222, Modulus of Soil Reaction	
ASTM D 2487, Soil Classification "Unified System"	
ASTM D 2113, Soil Borings	
ASTM C 207, Hydrated Lime	
ASTM C 131, Abrasion	
ASTM C 88, Soundness	
ASTM D 946, Penetration	
ASTM D 3381, Viscosity	
ASTM D 1559, Marshall Method	
ASTM C 136, Gradation	
ASTM D 2172, Extraction and Gradation	
ASTM D 2726, Bulk Specific Gravity	
ASTM D 2041, Maximum Theoretical Specific Gravity	
ASTM D 2950, Nuclear Density	
ASTM C 117 Washed Aggregate Sample	
ASTM D 4318, Liquid Limit, Plastic Limit, Plasticity Index	
ASTM C 127, Absorption and Specific Gravity	
ASTM C 128	
ASTM C 566, Moisture Content	
ASTM C 31, PCC Test Cylinders	
ASTM C 141, Slump	
ASTM C 231, Air Content	
ASTM C 78, Flexural Strength	
ASTM C 138, Yield, Cement Content	
ASTM D 412, Rubber in Tension	
ASTM D 1664, Striping Test	

The testing form shall be adjusted to the specific project. The consultant shall not assume IDOT will provide any testing and inspections. Payment for these services shall be at the rates established in ATTACHMENT K. - TESTING RATES & COST SUMMARY.

ATTACHMENT K

TESTING RATES & COST SUMMARY – *See Testing Proposal*

DESCRIPTION OF TEST	ESTIMATED COST PER TEST	NUMBER REQUIRED	TOTAL $

DocuSign Envelope ID: 58DC2E3F-201B-44F9-B91B-4E4CFE103732

TESTING SERVICE CORPORATION

Local Office

650 North Peace Road, Suite D, DeKalb, IL 60115
P: 815.748.2100 ▪ F: 815.748.2110

Corporate Office

360 South Main Place, Carol Stream, IL 60188-2404
630.462.2600

May 30, 2023

Mr. Douglas J. Klonowski
Crawford, Murphy & Tilly, Inc.
550 North Commons Drive Suite 116
Aurora, IL 60504

RE: P.N. 71,073
Construction Material Engineering
Remove/Replace Airport Parking Apron
3232 Pleasant Street
DeKalb, IL

Dear Mr. Klonowski:

Testing Service Corporation (TSC) is pleased to submit this proposal to provide the Construction Material Engineering for the referenced project. The broad objectives of our work will be to conduct and interpret tests, and to report our findings as directed by Crawford, Murphy & Tilly, Inc.

TSC has prepared a Report of Soils Exploration for this project. The Report bears our project number L-95,284.

TSC is staffed and equipped to provide any of the following services that may be ordered by you:

- **Field Quality Assurance Services**
  - Observe proof-rolling operations.
  - Recommend amount of undercut using IDOT cone penetrometer procedure.
  - Perform in-place density tests on engineered fill/backfill and granular base course.
  - Test plastic concrete for slump, air content, temperature, unit weight and cast test cylinders.
  - Establish rolling pattern for bituminous concrete pavement mix with nuclear density gauge.
  - Pickup samples in the field for laboratory tests.

- **Bituminous Concrete Batch Plant Quality Assurance Services**
  - Daily hot bin and extraction analysis.
  - Sampling and testing of stockpile materials.
  - Check and adjust mixing formulas, as necessary.
  - Check temperatures of bitumen, drum and final mix.
  - Mold Marshall samples and check for stability and flow or determine density of Prepared (HMA) specimen by means of Gyratory Compactor.
  - Other tests as required by current IDOT procedures guide.

- **Portland Cement Concrete Batch Plant Quality Assurance Services**
  - Verify that current IDOT mix design is being used.
  - Check moisture content of fine aggregate.
  - Perform sieve analysis on stockpiled materials, as required by IDOT criteria.
  - Check the slump, air and temperature of final mix.
  - Other tests, as required by current IDOT procedure guide.

DocuSign Envelope ID: 58DC2E3F-201B-44F9-B91B-4E4CFE103732

- **Laboratory**
  - Perform laboratory compaction curve for each soil type used.
  - Determine density and thickness for core samples submitted by contractor.
  - Aggregate gradation and soundness analysis.
  - Perform compressive and flexural strength tests for concrete cylinders and beams.
  - Other tests, as required.

- **QA Manager Services**
  - Review test results performed by our technicians in accordance with IDOT specification.
  - Monitor and schedule site visits to test 20% of the total quantities for HMA and PCC mixes.
  - Complete the necessary paperwork for PCC and HMA testing and electronically submit them to IDOT and your office.

TSC's field technicians are represented by Local 150 of the International Union of Operating Engineers. Supervision of the testing, observation, and reporting is provided by a Registered Professional Engineer. Reports will generally be issued on a weekly basis as work progresses. Invoices will be issued monthly, subsequent to the reporting period.

A budget amount of Seventeen Thousand Six Hundred Dollars ($17,600.00) is recommended for your project. This estimate is based on a review of plans and specifications provided by Crawford, Murphy & Tilly, Inc. and prior experience on similar projects. TSC's itemized estimate is included in the "Assumptions and Estimated Fee" portion of this proposal. Factors such as weather and contractor efficiency and deviations from minimum testing and observation requirements may significantly impact the CME budget. Our fee is further subject to this proposal being accepted by you on or before December 31, 2023.

The Services performed by TSC under this proposal are now subject to prevailing wage regulations under Illinois law. Prevailing wage rates are established in June by the State of Illinois. Should the established wage be changed between the time of this proposal and the time of work, it will be necessary to revise this proposal so that the rates required by law are properly reflected. Prevailing wage categories are defined as follows:

Material Tester I: Hand coring and drilling for testing of materials; field inspection of uncured concrete and asphalt.

Material Tester II: Field inspection of welds, structural steel, fireproofing, masonry, soil, facade, reinforcing steel, formwork, cured concrete and concrete and asphalt batch plants, adjusting proportions of bituminous mixtures.

TSC's fees include TSC's services being performed subject to the attached General Conditions which are incorporated herein. Unless we receive written instructions to the contrary, invoices will be sent to:

~~Mr. Douglas J. Klonowski~~	Accounts Payable DS JM DS DJK
Crawford, Murphy & Tilly, Inc.	
~~550 North Commons Drive - Suite 116~~	2750 West Washington Street
~~Aurora, IL 60504~~	Springfield, Il 62702
Tel: ~~(630) 820-1022~~	(217) 787-8050
Email: ~~dklonowski@cmtengr.com~~	ap@cmtengr.com

DocuSign Envelope ID: 58DC2E3F-201B-44F9-B91B-4E4CFE103732

When completing the attached project data form, kindly indicate who is to receive copies of TSC's report and other project data.

Your consideration of our proposal is appreciated. We look forward to being of service to you on this project.

Respectfully Submitted,

TESTING SERVICE CORPORATION

Timothy M. Muszynsky, P.E.
DeKalb Branch Manager

Enc: General Conditions
Project Data Sheet

Approved and accepted for CMT by:

DocuSigned by:
Douglas J Klonowski
EE2FD47BED8D4DB...
- Doug Klonowski, PE
(NAME)

Vice President/Aurora Office Co-Manager
(TITLE)

December 29, 2023
(DATE)

DocuSign Envelope ID: 58DC2E3F-201B-44F9-B91B-4E4CFE103732

SCHEDULE OF FEES

CONSTRUCTION MATERIALS ENGINEERING SERVICES

ITEM I FIELD SERVICES

A.	Material Tester I	Per Hour:	$ 117.00
B.	Material Tester II	Per Hour:	$ 120.00
C.	Transportation, Light Vehicle	Per Trip:	$ 60.00

The time is portal-to-portal from the office servicing the project.
Increase hourly rate by 1.5 for over 8.0 hours per day on Saturday.
Increase hourly rate by 1.7 for Sunday or Holiday work.
The minimum trip charge for 0 to 4 hours is four (4) hours and for 4 to 8 hours is eight (8) hours Monday through Friday and eight (8) hours on Saturday and Sunday.

Engineering services for summary report preparation are invoiced at the Graduate Engineer Rate.

D.	Use of Nuclear Moisture/Density Gauge	Per Day:	$ 50.00
E.	Pickup Concrete Test Samples		
	1. Fewer than 20 Cylinders at Grade Level	Per Trip:	$ 100.00
	2. 20 or more Cylinders or Cylinders in Basement or on Elevated Deck or Concrete Beams	Per Trip:	$ 150.00
F.	Structural Steel Test Equipment		
	1. Ultrasonic Flaw Detector	Per Day:	$ 50.00
	2. Magnetic Particle Yoke	Per Day:	$ 35.00
G.	Fire-Proofing		
	1. Cohesion Test Supplies	Per Day:	$ 60.00
	2. Density Test	Each:	$ 45.00

ITEM II LABORATORY SERVICES

A. Soils

1. Compaction Curve to establish the Maximum Dry Unit weight and optimum water content		
a. Modified (AASHTO T180, ASTM D1557)	Each:	$ 250.00
b. Standard (AASHTO T99, ASTM D698)	Each:	$ 225.00

DocuSign Envelope ID: 58DC2E3F-201B-44F9-B91B-4E4CFE103732

c. Add for Methods B, C, or D	Each:	$	20.00
2. Thin-Walled Tube Samples			
a. Combined Water Content & Dry Unit Weight Determination	Each:	$	20.00
b. Unconfined Compressive Strength	Each:	$	20.00
B. Portland Cement Concrete/Aggregates			
1. Concrete Test Cylinders (4"x8")			
a. Compressive Strength	Each:	$	16.00
b. Spares/Handling Charge	Each:	$	16.00
c. Trim End of Specimen When Necessary	Additional:	$	10.00
2. Concrete Test Cylinders (6"x12")			
a. Compressive Strength	Each:	$	19.00
b. Spares/Handling Charge	Each:	$	19.00
c. Trim End of Specimen When Necessary	Additional:	$	10.00
3. Concrete Beams for Flexural Strength Testing	Each:	$	50.00
4. Mortar Cubes			
a. Compressive Strength	Each:	$	19.00
b. 2" Cube Mold	Per Day:	$	8.00
5. Contractor Made Cylinders	Each:	$	30.00
a. Trim End of Specimen When Necessary	Additional:	$	10.00
6. Evaluation of Mortars for Plain & Reinforced Masonry			
a. Pre-Construction	Each:	$	350.00
b. Cement/Aggregate Ratio	Each:	$	50.00
7. Masonry Block Prisms	Each:	$	50.00
8. Sieve Analysis			
a. Washed w/200 Sieve	Each:	$	100.00
b. Unwashed	Each:	$	75.00
C. Bituminous Concrete			
1. Extraction Analysis			
a. Unwashed	Each:	$	225.00
b. Washed	Each:	$	250.00
2. Compaction of Bituminous Mixture by Gyratory Methods and Bulk Specific Gravity Test	Set of Two	$	225.00
3. Theoretical Maximum Specific Gravity of Paving Mixture	Each:	$	100.00

DocuSign Envelope ID: 58DC2E3F-201B-44F9-B91B-4E4CFE103732

4. Determining Asphalt Content by Ignition Oven:	Each:	$ 125.00
5. Determining Asphalt Content by Ignition Oven and Washed Gradation:	Each:	$ 200.00
6. Bulk Density of Core Specimens	Each:	$ 50.00

ITEM III CONSULTATION AND REPORT PREPARATION

A. Registered Professional Engineer, Principal	Per Hour:	$ 200.00
B. Registered Professional Engineer	Per Hour:	$ 175.00
C. Graduate Civil Engineer	Per Hour:	$ 160.00
D. Daily Engineering Services	Per Hour:	$ 160.00
E. Transportation		
1. Light Vehicle	Trip Charge:	$ 60.00
2. Light Vehicle (Over 100 miles round trip)	Per Mile:	~~$ 0.60~~
3. Public Transportation	Cost + 10%	

DS JM DS DJK

Per IDOT travel reimbursement policy

The above rates are valid through December 31, 2023.

ASSUMPTIONS & ESTIMATED FEE

The following estimate is based on our current cost structure.

Earth Excavation / Aggregate Base Course / Trench Backfill					
Item No.	ITEMS	Unit	Quantity	Unit Price	Amount
1	Material Tester II	Hour	16	120.00	$ 1,920.00
2	Material Tester II (Overtime)	Hour	0	180.00	$ 0.00
3	Travel, Light Vehicle	Trip	4	60.00	$ 240.00
4	Nuclear Moisture Density Gauge	Day	4	50.00	$ 200.00
5	Soil, Water Content and Dry Unit Weight Determination	Each	4	20.00	$ 80.00
6	Laboratory Compaction Curve Soil (Modified)	Each	2	250.00	$ 500.00
7	Sieve Analysis, Aggregate	Each	0	100.00	$ 0.00
				Subtotal	$ 2,940.00

Estimate Basis – Four (4) days @ 4 hours to observe existing subgrade soils and perform compaction testing for subgrade and aggregate base course materials.

Portland Cement Concrete/Field					
Item No.	ITEMS	Unit	Quantity	Unit Price	Amount
1	Material Tester I	Hour	48	117.00	$ 5,616.00
2	Material Tester I (Overtime)	Hour	0	175.00	$ 0.00
3	Travel, Light Vehicle	Trip	6	60.00	$ 360.00
4	Pickup Test Samples	Each	6	100.00	$ 600.00
5	Concrete Test Cylinders (6" x 12")	Each	8	19.00	$ 152.00
6	Concrete Test Cylinders (4" x 8")	Each	0	16.00	$ 0.00
7	Concrete Beams for Flexural Strength Testing	Each	64	50.00	$ 3,200.00
				Subtotal	$ 9,928.00

Estimate Basis – Five (5) days @ 8 hours and two (2) days @ 4 hours to perform in-situ testing for P.C. concrete at the batch plant and at the jobsite.

Bituminous Concrete/Field					
Item No.	ITEMS	Unit	Quantity	Unit Price	Amount
1	Material Tester I	Hour	8	117.00	$ 936.00
2	Material Tester I (Overtime)	Hour	0	175.00	$ 0.00
3	Travel, Light Vehicle	Trip	1	60.00	$ 60.00
4	Pickup Test Samples	Each	2	100.00	$ 200.00
5	Nuclear Moisture Density Gauge	Day	1	50.00	$ 50.00
6	Bituminous Concrete Extraction Analysis	Each	2	225.00	$ 450.00
7	Compaction of Bituminous Mixture by Gyratory Methods and Bulk Specific Gravity Test	Set of Two	2	225.00	$ 450.00
8	Theoretical Maximum Specific Gravity of Paving Mixture	Each	2	100.00	$ 200.00
9	Density of Core Samples	Each	0	50.00	$ 0.00
				Subtotal	$ 2,346.00

Estimate Basis – One (1) day @ 8 hours to perform in-situ compaction testing of Hot-Mix Asphalt (HMA) and split sample laboratory tests.

Project Coordination & Report Preparation					
Item No.	ITEMS	Unit	Quantity	Unit Price	Amount
1	Project Engineer	Hour	0	175.00	$ 0.00
2	QA Manager	Hour	15	160.00	$ 2,400.00
				Subtotal	$ 2,400.00

TSC's base fee schedule includes up to three copies of each report.

Estimated Total: $ 17,614.00

RECOMMENDED BUDGET: $ 17,600.00

DocuSign Envelope ID: 58DC2E3F-201B-44F9-B91B-4E4CFE103732

TSC

TESTING SERVICE CORPORATION

GENERAL CONDITIONS

Geotechnical and Construction Services

1. PARTIES AND SCOPE OF WORK: If Client is ordering the services on behalf of another, Client represents and warrants that Client is the duly authorized agent of said party for the purpose of ordering and directing said services, and in such case the term "Client" shall also include the principal for whom the services are being performed. Prices quoted and charged by TSC for its services are predicated on the conditions and the allocations of risks and obligations expressed in these General Conditions. Unless otherwise stated in writing, Client assumes sole responsibility for determining whether the quantity and the nature of the services ordered by Client are adequate and sufficient for Client's intended purpose. Unless otherwise expressly assumed in writing, TSC's services are provided exclusively for client. TSC shall have no duty or obligation other than those duties and obligations expressly set forth in this Agreement. TSC shall have no duty to any third party. Client shall communicate these General Conditions to each and every party to whom the Client transmits any report prepared by TSC. Ordering services from TSC shall constitute acceptance of TSC's proposal and these General Conditions.

2. SCHEDULING OF SERVICES: The services set forth in this Agreement will be accomplished in a timely and workmanlike manner. If TSC is required to delay any part of its services to accommodate the requests or requirements of Client, regulatory agencies, or third parties, or due to any cause beyond its reasonable control, Client agrees to pay such additional charges, if any, as may be applicable.

3. ACCESS TO SITE: TSC shall take reasonable measures and precautions to minimize damage to the site and any improvements located thereon as a result of its services or the use of its equipment; however, TSC has not included in its fee the cost of restoration of damage which may occur. If Client desires or requires TSC to restore the site to its former condition, TSC will, upon written request, perform such additional work as is necessary to do so and Client agrees to pay to TSC the cost thereof plus TSC's normal markup for overhead and profit.

4. CLIENT'S DUTY TO NOTIFY ENGINEER: Client represents and warrants that Client has advised TSC of any known or suspected hazardous materials, utility lines and underground structures at any site at which TSC is to perform services under this Agreement. Unless otherwise agreed in writing, TSC's responsibility with respect to underground utility locations is to contact the Illinois Joint Utility Locating Information for Excavators for the location of public, but not private, utilities.

5. DISCOVERY OF POLLUTANTS: TSC's services shall not include investigation for hazardous materials as defined by the Resource Conservation Recovery Act, 42 U.S.C.§ 6901, et, seq., as amended ("RCRA") or by any state or Federal statute or regulation. In the event that hazardous materials are discovered and identified by TSC, TSC's sole duty shall be to notify Client.

6. MONITORING: If this Agreement includes testing construction materials or observing any aspect of construction of improvements, Client's construction personnel will verify that the pad is properly located and sized to meet Client's projected building loads. Client shall cause all tests and inspections of the site, materials and work to be timely and properly performed in accordance with the plans, specifications, contract documents, and TSC's recommendations. No claims for loss, damage or injury shall be brought against TSC unless all tests and inspections have been so performed and unless TSC's recommendations have been followed.

TSC's services shall not include determining or implementing the means, methods, techniques or procedures of work done by the contractor(s) being monitored or whose work is being tested. TSC's services shall not include the authority to accept or reject work or to in any manner supervise the work of any contractor. TSC's services or failure to perform same shall not in any way operate or excuse any contractor from the performance of its work in accordance with its contract. "Contractor" as used herein shall include subcontractors, suppliers, architects, engineers and construction managers.

Information obtained from borings, observations and analyses of sample materials shall be reported in formats considered appropriate by TSC unless directed otherwise by Client. Such information is considered evidence, but any inference or conclusion based thereon is, necessarily, an opinion also based on engineering judgment and shall not be construed as a representation of fact. Subsurface conditions may not be uniform throughout an entire site and ground water levels may fluctuate due to climatic and other variations. Construction materials may vary from the samples taken. Unless otherwise agreed in writing, the procedures employed by TSC are not designed to detect intentional concealment or misrepresentation of facts by others.

7. DOCUMENTS AND SAMPLES: Client is granted an exclusive license to use findings and reports prepared and issued by TSC and any sub-consultants pursuant to this Agreement for the purpose set forth in TSC's proposal provided that TSC has received payment in full for its services. TSC and, if applicable, its sub-consultant, retain all copyright and ownership interests in the reports, boring logs, maps, field data, field notes, laboratory test data and similar documents, and the ownership and freedom to use all data generated by it for any purpose. Unless otherwise agreed in writing, test specimens or samples will be disposed immediately upon completion of the test. All drilling samples or specimens will be disposed sixty (60) days after submission of TSC's report.

8. TERMINATION: TSC's obligation to provide services may be terminated by either party upon (7) seven days prior written notice. In the event of termination of TSC's services, TSC shall be compensated by Client for all services performed up to and including the termination date, including reimbursable expenses. The terms and conditions of these General Conditions shall survive the termination of TSC's obligation to provide services.

9. PAYMENT: Client shall be invoiced periodically for services performed. Client agrees to pay each invoice within fifteen (15) days upon payment from Owner. ~~thirty (30) days of its receipt. Client further agrees to pay interest on all amounts invoiced and not paid or objected to in writing for valid cause within sixty (60) days at the rate of twelve (12%) per annum (or the maximum interest rate permitted by applicable law, whichever is the lesser) until paid and TSC's costs of collection of such accounts, including court costs and reasonable attorney's fees.~~

10. WARRANTY: TSC's professional services will be performed, its findings obtained and its reports prepared in accordance with these General Conditions and with generally accepted principles and practices. In performing its professional services, TSC will use that degree of care and skill ordinarily exercised under similar circumstances by members of its profession. In performing physical work in pursuit of its professional services, TSC will use that degree of care and skill ordinarily used under similar circumstances. This warranty is in lieu of all other warranties or representations, either express or implied. Statements made in TSC reports are opinions based upon engineering judgment and are not to be construed as representations of fact.

~~Should TSC or any of its employees be found to have been negligent in performing professional services or to have made and breached any express or implied warranty, representation or contract, Client, all parties claiming through Client and all parties claiming to have in any way relied upon TSC's services or work agree that the maximum aggregate amount of damages for which TSC, its officers, employees and agents shall be liable is limited to $50,000 or the total amount of the fee paid to TSC for its services performed with respect to the project, whichever amount is greater.~~

~~In the event Client is unwilling or unable to limit the damages for which TSC may be liable in accordance with the provisions set forth in the preceding paragraph, upon written request of Client received within five days of Client's acceptance of TSC's proposal together with payment of an additional fee in the amount of 5% of TSC's estimated cost for its services (to be adjusted to 5% of the amount actually billed by TSC for its services on the project at time of completion), the limit on damages shall be increased to $500,000 or the amount of TSC's fee, whichever is the greater. This charge is not to be construed as being a charge for insurance of any type, but is increased consideration for the exposure to an award of greater damages.~~

11. INDEMNITY: Subject to the provisions set forth herein, TSC and Client hereby agree to indemnify and hold harmless each other and their respective shareholders, directors, officers, partners, employees, agents, subsidiaries and division (and each of their heirs, successors, and assigns) from any and all claims, demands, liabilities, suits, causes of action, judgments, costs and expenses, including reasonable attorneys' fees, arising, or allegedly arising, from personal injury, including death, property damage, including loss of use thereof, due in any manner to the negligence of either of them or their agents or employees or independent contractors. In the event both TSC and Client are found to be negligent or at fault, then any liability shall be apportioned between them pursuant to their pro rata share of negligence or fault. TSC and Client further agree that their liability to any third party shall, to the extent permitted by law, be several and not joint. ~~The liability of TSC under this provision shall not exceed the policy limits of insurance carried by TSC.~~ Neither TSC nor Client shall be bound under this indemnity agreement to liability determined in a proceeding in which it did not participate represented by its own independent counsel. The indemnities provided hereunder shall not terminate upon the termination or expiration of this Agreement, but may be modified to the extent of any waiver of subrogation agreed to by TSC and paid for by Client.

12. SUBPOENAS: TSC's employees shall not be retained as expert witnesses except by separate, written agreement. Client agrees to pay TSC pursuant to TSC's then current fee schedule for any TSC employee(s) subpoenaed by any party as an occurrence witness as a result of TSC's services.

13. OTHER AGREEMENTS: TSC shall not be bound by any provision or agreement (i) requiring or providing for arbitration of disputes or controversies arising out of this Agreement or its performance, (ii) wherein TSC waives any rights to a mechanics lien or surety bond claim; (iii) that conditions TSC's right to receive payment for its services upon payment to Client by any third party or (iv) that requires TSC to indemnify any party beyond its own negligence These General Conditions are notice, where required, that TSC shall file a lien whenever necessary to collect past due amounts. This Agreement contains the entire understanding between the parties. Unless expressly accepted by TSC in writing prior to delivery of TSC's services, Client shall not add any conditions or impose conditions which are in conflict with those contained herein, and no such additional or conflicting terms shall be binding upon TSC. The unenforceability or invalidity of any provision or provisions shall not render any other provision or provisions unenforceable or invalid. This Agreement shall be construed and enforced in accordance with the laws of the State of Illinois. In the event of a dispute arising out of or relating to the performance of this Agreement, the breach thereof or TSC's services, the parties agree to try in good faith to settle the dispute by mediation under the Construction Industry Mediation Rules of the American Arbitration Association as a condition precedent to filing any demand for arbitration, or any petition or complaint with any court. Paragraph headings are for convenience only and shall not be construed as limiting the meaning of the provisions contained in these General Conditions.

ATTACHMENT L (Optional)

SUMMARY OF PAYROLL BURDEN AND FIXED COSTS

	% of Direct Productive Payroll
Federal Insurance Contributions Act	_____
State Unemployment Compensation	_____
Federal Unemployment Compensation	_____
Workmen's Compensation Insurance	_____
Paid Holidays, Vacation, Sick Leave	_____
Bonus	_____
Pension	_____
Group Insurance	_____
TOTAL PAYROLL BURDEN & FRINGE COSTS	_____ %

NOTE:
A letter from IDOT with approval or provisional payroll burden / fringe and general / administrative expense rates must be attached (ATTACHMENT S) for verification of rates.

ATTACHMENT M (Required)

SUMMARY OF OVERHEAD AND INDIRECT COSTS

CRAWFORD, MURPHY & TILLY, INC.
SUMMARY OF INDIRECT OVERHEAD COST
AUDITED CALENDAR YEAR 2021
AND PROVISIONAL 2021/2022

CMT ACCOUNT NUMBER	ACCOUNT NAME	% OF DIRECT LABOR COSTS	
	PAYROLL BURDEN AND FRINGE BENEFITS		
6151	FICA Tax	12.81%	
6102, 6103, 6170	Paid Time Off (Vacation, Holidays and Sick Leave)	15.79%	
6154, 6156, 6158	Group Medical, Life, Workers Comp, Disability and Unemployment Insurance	15.35 %	
6159, 6160	Employee Retirement Plan Contributions	10.81%	54.76%
	GENERAL & ADMINISTRATIVE OVERHEAD EXPENSE		
6104-6120	Indirect Salaries - Not Allocable to Projects	69.72%	
6222, 6264	Miscellaneous Taxes	1.02%	
6231	Professional Fees	4.60%	
6251	Rent	10.39%	
6252	Utilities	0.76%	
6271	Telephone & Data	2.29%	
6253-6254	Maintenance, Repairs & Supplies	1.60%	
6261-6265	Office Supplies, Shipping & Reproduction	1.22%	
6281, 6284	Seminars, Registration & Education	2.71%	
6291,92,95,6321-23	Travel & Vehicle Expense	2.29%	
6331, 6332	Business Insurance	3.15%	
6351,52,61,62,69	Equipment Expense, Repairs & Maintenance	1.30%	
6366, 6367, 6368	Computer Expense & Supplies	12.11%	
6371,6372,6381,6382	Maps, Reference Books, Engineering & Survey Supplies	0.44%	
6401+COFC	Depreciation & Cost of Facilities Capital (0.14%)	3.90%	117.50%
	TOTAL OVERHEAD		172.26%

NOTE: A letter from IDOT with approval or provisional payroll burden / fringe and general / administrative expense rates must be attached (ATTACHMENT S) for verification of rates.

ATTACHMENT N

PROJECT CERTIFICATION

Airport: _____

Letting Date: _____
IL Project No.: _____
Federal Project No.: _____
Contract No: _____

Project Description: _____

_____

Pursuant to Federal Aviation Regulations, Part 152, as amended, and as a condition to receiving any Federal and/or State financial assistance through a Grant Offer from the FAA and/or the State of Illinois - Department of Transportation for the proposed airport development project, it is hereby represented, to the best of our knowledge, information, and belief that:

1. The Consultant has been selected to provide the necessary professional services for the project described herein and identified in the Professional Services Request For Qualifications (RFQ).
   Selection Date (Required):_____ Copy of Retainer attached (ATTACHMENT U).
2. Project is clearly delineated on the currently approved Airport Layout Plan.
   Approval Date (Required):_____.
3. Project is environmentally cleared. [ ] CatEx [ ] EA [ ] EIS [ ] FONSI
   Approval Date (Required):_____.
4. All Corps/EPA permits and other regulatory agency reviews/approvals/mitigation have been satisfied and there are no known encumbrances to the completion of the project.
   [ ] Yes [ ] No.
5. Plans were prepared in accordance with FAA approved standards and advisory circulars; and, the specifications were prepared in accordance with the FAA approved *Illinois Standard Specifications For Construction Of Airports*, along with the Division of Aeronautics' most current Policy Memorandums and "Handout" Specifications, except as noted by attached Modification of Standards (MOS) which has been addressed and justified in the engineering report and submitted to and approved by the FAA and Engineer of Design. [ ] Yes [ ] No.
   Approval Date of MOS (If applicable):_____.
6. The design conforms to the approved project scope. [ ] Yes [ ] No.
7. Provisions have been included for safety during construction (per guidance explained in FAA AC 150/5370-2F (or current) Operational Safety on Airports during Construction). [ ] Yes [ ] No.
8. The plans, special provisions and quantities have been thoroughly checked in accordance with best management practices by the Consultant for accuracy and consistency, and are in conformance with AC 150/5300-13 (latest edition). All contract deliverables referenced in Section I.F. DELIVERABLES have been submitted, received and determined acceptable.
   [ ] Yes [ ] No.

Date _____ By: _____
Design Engineer (Consultant)

Date _____ By: _____
Sponsor

Date _____ By: _____ P.E.
Department Design Engineer

Date _____ By: _____ P.E.
Engineer of Design

ATTACHMENT O

DBE FINAL DOCUMENTATION

Illinois Department of Transportation

Prime Consultant

Name _____
Address _____
_____
Telephone _____

DBE Subconsultant

Name _____
Address _____
_____
Telephone _____

Subject

Airport _____
Illinois Project No. _____
Federal Project No _____

Contract Amounts

Consultant Contract Amount _____
DBE Contract Amount _____
DBE Participation (%) _____

This documentation verifies the services provided and the amount paid to the DBE Subconsultant on the above captioned contract. The undersigned certifies that the services reported herein were executed by the DBE, that the DBE actually provided the services and that the services reported herein conform to the services reported in the approved Professional Services Agreement together with any amendments approved by the Sponsor and/or Division as applicable.

Description of Service Provided	Contract Amount	Amount Paid	Difference (+/-)
1.			
2.			
3.			
4.			
5.			
6.			
Totals			

DBE Contract amount has been met or exceeded [ ] Yes [ ] No *(check one).*

DBE Contract amount not met – Shortfall $_____ *(documentation explaining shortfall attached).*

Prime Consultant

_____
Print Name

_____
Title

_____
Signature

_____
Date

DBE Subconsultant

_____
Print Name

_____
Title

_____
Signature

_____
Date

ATTACHMENT P

PROJECT SKETCH

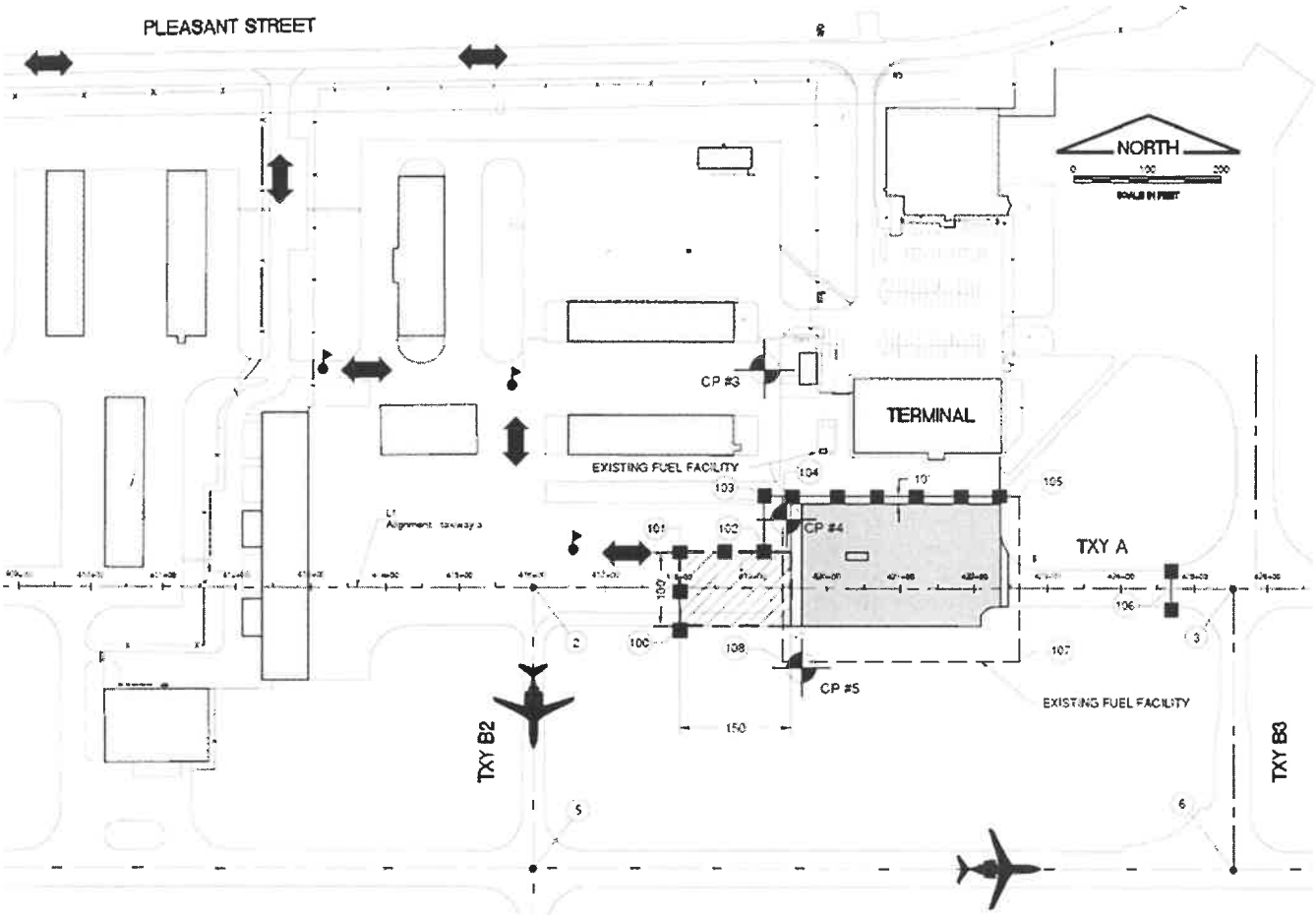

ATTACHMENT Q

PROJECT LETTING SCHEDULE

ILLINOIS DEPARTMENT OF TRANSPORTATION
DIVISION OF AERONAUTICS
2023 LETTING SCHEDULE WITH ASSOCIATED REGRESSIVE DATES

22 Week Project Development Timeline (154 Calendar Days)				IDOT Letting Date	Anticipated Award Date	Anticipated Start to Work Date
START (0%)	35%	80%	100%			
Pre-design Meeting Target Date	Engineering Report to IDA for Comments	*Sealable Plans and Specifications to IDA for Comments	Approved and Sealed Final Plans and Specifications to IDA			
19-Nov-2021	14-Jan-2022	25-Mar-2022	22-Apr-2022	17-Jun-2022	16-Sep-2022	14-Oct-2022
07-Jan-2022	04-Mar-2022	13-May-2022	10-Jun-2022	05-Aug-2022	04-Nov-2022	01-May-2023
25-Feb-2022	22-Apr-2022	01-Jul-2022	29-Jul-2022	23-Sep-2022	23-Dec-2022	01-May-2023
22-Apr-2022	17-Jun-2022	26-Aug-2022	23-Sep-2022	18-Nov-2022	17-Feb-2023	01-May-2023
17-Jun-2022	12-Aug-2022	21-Oct-2022	18-Nov-2022	20-Jan-2023	21-Apr-2023	19-May-2023
12-Aug-2022	07-Oct-2022	16-Dec-2022	13-Jan-2023	10-Mar-2023	09-Jun-2023	07-Jul-2023
30-Sep-2022	25-Nov-2022	03-Feb-2023	03-Mar-2023	28-Apr-2023	28-Jul-2023	25-Aug-2023
18-Nov-2022	13-Jan-2023	24-Mar-2023	21-Apr-2023	16-Jun-2023	15-Sep-2023	13-Oct-2023
06-Jan-2023	03-Mar-2023	12-May-2023	09-Jun-2023	04-Aug-2023	03-Nov-2023	01-May-2024
24-Feb-2023	21-Apr-2023	30-Jun-2023	28-Jul-2023	22-Sep-2023	22-Dec-2023	01-May-2024

Requirements of the 80% milestone submittal shall include a complete set of Contract Documents, as outlined in the A/E agreement, designed and reviewed for adherence to Federal Aviation Administration (FAA) and Illinois Division of Aeronautics (IDA) concepts and standards by a licensed Illinois Professional Engineer. Submittals shall include but not limited to the following documents: Construction Plans, Special Provisions and Construction Safety Phasing Plan with a detailed Estimate of Costs, Contract Time, and DBE Participation Goal along with any applicable Modifications of Standards and Certification requirements required by the FAA Review Matrix Guide per memorandum dated 08/02/2016.

ATTACHMENT R

OP&P PROGRAM LETTER

Illinois Department of Transportation
Office of Planning and Programming
2300 South Dirksen Parkway / Springfield, Illinois / 62764

June 1, 2021

Ms. Renee Riani
Airport Manager
DeKalb Taylor Municipal Airport
3232 Pleasant Street
DeKalb, IL 60115

Ms. Riani,

The Illinois Department of Transportation's Airport Improvement Program provides funding for projects at airports throughout the state to ensure the continuation of safe and efficient operations at these facilities and maximize opportunities for economic development in Illinois.

The project detailed herein was selected for your airport based on project requests submitted to the Department during the Transportation Improvement Program (TIP) meetings. This program is based on Federal Aviation Administration (FAA) funding levels established in federal legislation which provide for a minimum of $1 million in entitlement funds for primary airports and a maximum of $150,000 entitlement funds for non-primary airports. Federal legislation calls for a maximum 90% federal participation. As such, the state and local match will be 5% each for all projects which are eligible for state funding. All other federal projects which are not eligible for state funds will require a minimum 10% local match.

Funding for the Illinois Airport Improvement Program is dependent upon receipt of Federal funds and legislative authorization of state appropriations. In addition, proposed development and land acquisition must be shown on an approved ALP, have cleared environmental processing, and the land already acquired or have a signed purchase agreement. For projects seeking Federal Discretionary Funds these requirements must be completed, and evidence of completion provided to Aeronautics by **October 1, 2021** before a project can be considered for funding.

The Department and the Airport Sponsor hereby specifically agree that they shall pay the above defined percentages of all project costs. Airport sponsors shall be responsible to pay for all planning and design services at time of project letting and seek reimbursement within the project at the time of award. In addition, the GRANTEE shall pay such additional project costs which exceed the sum of the GRANTOR's funds and the Federal funds, as are herein committed for this Project. **In the event your project exceeds these budget totals, the Sponsor may elect to pay any additional project costs which exceed the total sum of state and federal funds as planned and programmed to complete the project. If additional funds are deemed necessary post award, an amendment to the Agency Agreement with the Department must be developed and approved by the Department and the FAA before any additional funding may be allocated.**

In the event the Illinois General Assembly fails to appropriate funds, or sufficient funds are otherwise not made available for these projects, the Airport Sponsor will be required to pay the state and local costs as itemized below. This will include any amount which exceeds the totals listed.

Projects were selected based on the FAA's National Priority System as well as other state and local priorities. The Department has programmed the following project to be included in the FFY 2022 Proposed Airport Improvement Program for your airport:

The project "**Remove & replace a portion of the aircraft parking apron**" will be funded as follows:

Federal State Apportionment Funds	$696,000
Non-Primary Entitlement Funds	$150,000
State Match	$47,000
Local Match	$47,000
Total Project Cost	$940,000

***If this project is seeking AIP Federal Discretionary Funds from the Federal Aviation Administration (FAA) until such time the funds are received by the Department this project is not guaranteed.**

The Office of Intermodal Project Implementation (Aeronautics) letting schedule for construction projects must be strictly followed to ensure projects are advertised and brought to letting in an organized manner. The letting schedule allows for 30 weeks to develop a project from the date of the pre-design meeting to the letting.

To ensure eligibility of professional services for state and federal funding participation, you are required to satisfy the qualifications based selection process and enter into a retainer agreement, or professional services A/E agreement with the consultant of record selected for the project prior to any costs being incurred. This should take place prior to the project initiation/pre-design meeting. Aeronautics will facilitate this process, as well as the initial development and review of fees.

The project contained in this letter is officially programmed for development provided all state and federal requirements have been met. It is now the Airport Sponsor's responsibility to initiate the professional services phase of the project. Please contact Aeronautics, either directly or through your consultant, to schedule a project initiation meeting.

Please contact Mr. Alan Mlacnik, P.E. – Bureau Chief of Airport Engineering at 217.785.4884 to initiate this project. **Please initiate this project within 12 months of the date of this letter or this project will no longer be considered programmed. Projects are initiated by scheduling a predesign meeting for design/construction projects or a project initiation meeting for planning and environmental projects.**

ATTACHMENT S

CURRENT IDOT PROVISIONAL PAYROLL BURDEN / FRINGE EXPENSE AND GENERAL / ADMINISTRATIVE EXPENSE RATE LETTER

Illinois Department of Transportation
2300 South Dirksen Parkway / Springfield, Illinois / 62764

June 2, 2023

Subject: PRELIMINARY ENGINEERING
Consultant Unit
Prequalification File

Roger Driskell
CRAWFORD, MURPHY, & TILLY, INC.
2750 West Washington Street
Springfield, IL 62702

Dear Roger Driskell,

We have completed our review of your "Statement of Experience and Financial Condition" (SEFC) which you submitted for the fiscal year ending Dec 31, 2021. Your firm's total annual transportation fee capacity will be $96,800,000.

Your firm's payroll burden and fringe expense rate and general and administrative expense rate totaling 172.26% are approved on a provisional basis. The rate used in agreement negotiations may be verified by our Bureau of Investigations and Compliance in a pre-award audit. Pursuant to 23 CFR 172.11(d), we are providing notification that we will post your company's indirect cost rate to the Federal Highway Administration's Audit Exchange where it may be viewed by auditors from other State Highway Agencies.

Your firm is required to submit an amended SEFC through the Engineering Prequalification & Agreement System (EPAS) to this office to show any additions or deletions of your licensed professional staff or any other key personnel that would affect your firm's prequalification in a particular category. Changes must be submitted within 15 calendar days of the change and be submitted through the Engineering Prequalification and Agreement System (EPAS).

Your firm is prequalified until December 31, 2022. You will be given an additional six months from this date to submit the applicable portions of the "Statement of Experience and Financial Condition" (SEFC) to remain prequalified.

Sincerely,
Jack Elston, P.E.
Bureau Chief
Bureau of Design and Environment

ATTACHMENT T

CONSULTANT'S PRELIMINARY ESTIMATE OF PROBABLE CONSTRUCTION COSTS

N/A – Construction Phase Services

ATTACHMENT U

RETAINER AGREEMENT

Exhibit A – Scope of Services

Including Illinois Department of Transportation – Division of Aeronautics and Federal Aviation Administration Standard Conditions

WHEREAS, the Owner intends to sponsor the accomplishment of a development program in stages of the public air navigation facilities known as the **DeKalb Taylor Municipal Airport** located in Latitude 41°56'01.8" N, Longitude 88° 42'20.5" W, in **DeKalb** County, State of Illinois; and

WHEREAS, the development program shall include projects described as:

1. Preparation of necessary applications, environmental documentation, airspace request and other documentation for FAA and IDOT DOA grant funding for projects within the 5-year Transportation Improvement Proposal.
2. Land acquisition/land acquisition reimbursement, including various plat preparation, such as appraisal plats, easements, plats of survey, etc., clear zone obstructions surveys, technical advice, and environmental site assessments.
3. Replace Existing VASI units on Runway Ends 2, 20 and 27 with PAPI Units.
4. Technical Assistance including Environmental Evaluations, Engineering review and consultation for the Reimbursement Request for the Purchase of the Snow Removal Equipment (SRE) Building – Phase 1 and 2.
5. Crack Repair and Remark Runway 2/20 including Rehabilitation evaluation and design for Runway 2/20 including lead-in connecting Taxiways.
6. Removal and Replacement or Rehabilitation of existing Aircraft Parking Aprons.
7. Overlay, Rehabilitation and Restore crown and grade for Runway 2/20 including lead-in connecting Taxiways.
8. Remove and Replace Perimeter Security Fencing
9. Rehabilitation of T-Hangar Taxiway pavements, Parking Lots, Roads and Aprons, Phases 1, 2 and 3.
10. Airport Utility Relocation Design and Development, Various Phases. Develop preliminary engineering and plans for the relocation of necessary utilities on the airport including the accommodation of future Airport Developments.
11. Enlarge Existing 1st Detention Basin and Construct 2nd Detention basin to accommodate future development including stormwater design, evaluation and engineering.
12. Preliminary Engineering, Site Engineering for future Hangar development and expansion.
13. Relocation of Pleasant Street including alignment, engineering and plan development to accommodate East Frontal Area development.
14. Expand large aircraft parking apron including engineering for the necessary construction of the apron and any connecting taxiways.

WHEREAS, the Department of Transportation, Division of Aeronautics, State of Illinois, is authorized Agent of the Owner under the proposed development program (it shall be hereinafter referred to as the "Division");

WHEREAS, the Engineer agrees to furnish an executed "Certification of Engineer" and certain professional engineering services enumerated hereinafter, in connection with the aforesaid development project.

I. ENGINEERING SERVICES

The Engineer agrees to furnish and perform the various professional engineering services required for the preparation of the above reference construction project as follows:

(A.) The Planning Phase

1. Upon request by the Owner, the Engineer agrees to attend meetings and provide any professional advice, guidance and assistance in planning for the projects included in