RESOLUTION 2021-083 **PASSED: SEPTEMBER 13, 2021**

AUTHORIZING THE AWARD OF A CONSTRUCTION SERVICES CONTRACT TO CURRAN CONTRACTING COMPANY IN THE AMOUNT OF $1,736,419.37 FOR ILLINOIS ROUTE 23 AND GURLER ROAD IMPROVEMENTS, WITH STAFF AUTHORITY TO APPROVE CHANGE ORDERS UP TO A COMBINED PROJECT TOTAL NOT TO EXCEED $1,866,650.

WHEREAS, the City of DeKalb (the "City") is a home rule unit of local government pursuant to Article VII, Section 6, of the Illinois Constitution of 1970; and

WHEREAS, the City's corporate authorities find that it is in the City's best interest for the promotion of the public welfare to improve the City's streets by constructing widening and signalization improvements to the intersection of Illinois Route 23 and Gurler Road (the "Project"); and

WHEREAS, the City publicly opened bids on August 30, 2021 for the Project with the lowest responsive and responsible bidder as Curran Contracting Company (the "Contractor"); and

WHEREAS, the City's corporate authorities find that it is in the City's best interests to approve the Contractor's bid, subject to the provisions of this Resolution; and

NOW, THEREFORE, BE IT RESOLVED BY THE COUNCIL OF THE CITY OF DEKALB, ILLINOIS:

SECTION 1: The City's corporate authorities approve, authorize, direct, and ratify the City Manager to enter into an agreement with Contractor in a form acceptable to the City Manager for the Illinois Route 23 and Gurler Road Improvements Project in an amount of $1,736,419.37, with staff authority to approve change orders up to a combined project total of $1,886,650.

SECTION 2: This resolution and each of its terms shall be the effective legislative act of a home rule municipality without regard to whether such resolution should (a) contain terms contrary to the provision of current or subsequent non-preemptive state law, or (b) legislate in a manner or regarding a matter not delegated to municipalities by state law. It is the intent of the corporate authorities of the City of DeKalb that to the extent that the terms of this resolution should be inconsistent with any non-preemptive state law, that this resolution shall supersede state law in that regard within its jurisdiction.

SECTION 3: This resolution shall be in full force and effect from and after its passage and approval as provided by law.

PASSED BY THE CITY COUNCIL of the City of DeKalb, Illinois at a Regular meeting thereof held on the 13th day of September 2021 and approved by me as Mayor on the same day. Passed by an 8-0 roll call vote. Aye: Morris, Larson, Smith, Perkins, McAdams, Verbic, Faivre, Barnes. Nay: None.

CITY OF DEKALB STATE OF ILLINOIS

COHEN BARNES, Mayor

ATTEST:

Ruth A. Scott, Executive Assistant

Illinois Department of Transportation
Office of Highways Project Implementation / Region 2 / District 3
700 East Norris Drive / Ottawa, Illinois 61350-1628

September 29, 2021

Ms. Ruth A. Scott, Executive Assistant
City of DeKalb
164 E Lincoln Highway
DeKalb, IL 60115

EDP Funds
City of DeKalb
Section No. 21-00197-00-WR

Dear Ms. Scott:

The contract in the amount of $1,736,419.37 between the City of DeKalb and Curran Contracting Company for this section was approved on September 28, 2021.

The name of your QA Manager must be forwarded to this office prior to work commencing in accordance with the Local Agency HMA QC/QA Procedures along with the date when work is scheduled to begin.

The QC Addendum approved by the QA Manager must be forwarded to this office prior to work commencing.

Additionally, all materials inspection must be in accordance with the Projects Procedure Guidelines.

One copy of the approved contract is being forwarded to the contractor.

If you have any questions, please contact Steve Chery at (815) 434-8426.

Sincerely,

Masood Ahmad, P.E.
Region Two Engineer

By: Steve Chery, MSCE, P.E.
Local Roads and Streets Engineer

Enclosure

cc: Zac Gill, P.E., City Engineer
Curran Contracting Company
Mike Short (letter only)

SC:dcm/ContractAppr-Munic_DeKalb_20-00197-00-WR

JACOB & HEFNER ASSOCIATES
1333 Butterfield Road, Suite 300
Downers Grove, IL 60515
P 630-652-4600
F 630-652-4601

Local Public Agency: City of DeKalb
County: DeKalb
Section: 20-00197-00-WR

Date: 8/30/2021
Time: 2:00 PM
Appropriation:
Estimate: $1,673,627.31

Attended By: n/a

						Name of Bidder:	Curran Contracting Company		William Charles Construction	
						Address of Bidder:	286 Memorial Court		833 Featherstone Road	
							Crystal Lake, IL 60014		Rockford, IL 61107	
						Proposal Guarantee:	$86,818.47		$90,756.47	
						Terms:	n/a		n/a	
				Approved Engineer's Estimate						
Item No.	Item	Unit	Quantity	Unit Price	Total	Unit Price	Total	Unit Price	Total
20200100	EARTH EXCAVATION (STRUCTURAL MATERAIL CUT TO FILL)	CU YD	1,308	$16.00	$20,928.00	$80.00	$104,640.00	$20.00	$26,160.00
20201200	REMOVAL AND DISPOSAL OF UNSUITABLE MATERIAL (TOPSOIL EXPORT)	CU YD	2,799	$20.00	$55,982.04	$0.01	$27.99	$0.01	$27.99
20201200	REMOVAL AND DISPOSAL OF UNSUITABLE MATERIAL (ALLOWANCE)	CU YD	254	$20.00	$5,085.99	$30.00	$7,620.00	$27.20	$6,908.80
20400800	FURNISHED EXCAVATION (STRUCTURAL MATERIAL IMPORT & FILL)	CU YD	13,087	$8.00	$104,696.80	$0.01	$130.87	$0.01	$130.87
20800150	TRENCH BACKFILL	CU YD	709	$44.25	$31,363.42	$0.01	$7.09	$0.01	$7.09
21101505	TOPSOIL EXCAVATION AND PLACEMENT	CU YD	3,660	$15.00	$54,893.06	$8.25	$30,195.00	$10.20	$37,332.00
25000210	SEEDING, CLASS 2A	AC	5	$2,050.00	$9,300.06	$330.00	$1,650.00	$2,500.00	$12,500.00
25100630	EROSION CONTROL BLANKET (NAG SC150 OR APPROVED EQUAL)	SQ YD	21,957	$1.50	$32,935.83	$1.70	$37,326.90	$1.45	$31,837.65
25100900	TURF REINFORCEMENT MAT (NAG SC 250 OR APPROVED EQUAL)	SQ YD	325	$5.00	$1,625.00	$12.50	$4,062.50	$7.00	$2,275.00
28000305	TEMPORARY DITCH CHECKS	FOOT	375	$14.50	$5,437.50	$10.98	$4,117.50	$7.00	$2,625.00
28000400	PERIMETER EROSION BARRIER (SILT FENCE)	FOOT	6,037	$3.00	$18,111.00	$1.95	$11,772.15	$3.00	$18,111.00
28000500	INLET AND PIPE PROTECTION (CULVERT PROTECTION)	EACH	16	$185.00	$2,960.00	$160.00	$2,560.00	$250.00	$4,000.00
28000510	INLET FILTERS (INLET PROTECTION)	EACH	4	$230.00	$920.00	$175.00	$700.00	$200.00	$800.00
28100105	STONE RIPRAP, CLASS A3	SQ YD	62	$63.25	$3,921.50	$23.05	$1,429.10	$68.70	$4,259.40
30300001	*AGGREGATE SUBGRADE IMPROVEMENT TO REPLACE ANY UNSUITABLE MATERAIL TO BE REMOVED (CONTRACTOR TO PROVIDE UNIT COST IF NEEDED)	CU YD		$44.00	$0.00	$50.00	-	$50.00	
31100300	SUBBASE GRANULAR MATERIAL, TYPE A 4"	SQ YD	8,613	$6.75	$58,137.00	$6.78	$58,396.14	$10.60	$91,297.80
35101100	AGGREGATE BASE COURSE, TYPE A 12"	SQ YD	542	$25.50	$13,818.17	$22.00	$11,924.00	$38.40	$20,812.80
35501316	HOT-MIX ASPHALT BASE COURSE, 8"	SQ YD	5,807	$27.50	$159,692.50	$31.00	$180,017.00	$36.00	$209,052.00
40200900	*AGGREGATE SURFACE COURSE, TYPE B	CU YD	85	$55.20	$4,669.51	$65.82	$5,594.70	$55.00	$4,675.00
40600275	BITUMINOUS MATERIALS (PRIME COAT)	POUND	20,598	$0.30	$6,179.48	$0.01	$205.98	$0.01	$205.98
40600290	BITUMINOUS MATERIALS (TACK COAT)	POUND	6,489	$0.60	$3,893.10	$0.01	$64.89	$0.01	$64.89
40602970	HOT-MIX ASPHALT BINDER COURSE, IL-9.5FG, N70	TON	186	$88.00	$16,350.28	$92.00	$17,112.00	$90.00	$16,740.00
40603085	HOT-MIX ASPHALT BINDER COURSE, IL-19.0, N70	TON	1,476	$83.00	$122,523.60	$76.00	$112,176.00	$80.00	$118,080.00
40604062	HOT-MIX ASPHALT SURFACE COURSE, IL-9.5, MIX "D", N70	TON	1,662	$86.00	$142,901.73	$76.00	$126,312.00	$81.00	$134,622.00
44000100	PAVEMENT REMOVAL	SQ YD	318	$18.50	$5,883.00	$22.00	$6,996.00	$17.70	$5,628.60

JACOB & HEFNER ASSOCIATES
1333 Butterfield Road, Suite 300
Downers Grove, IL 60515
P 630-652-4600
F 630-652-4601

Local Public Agency: City of DeKalb
County: DeKalb
Section: 20-00197-00-WR

Date: 8/30/2021
Time: 2:00 PM
Appropriation:
Estimate: $1,673,627.31

Attended By: n/a

						Name of Bidder:	Curran Contracting Company		William Charles Construction	
						Address of Bidder:	286 Memorial Court		833 Featherstone Road	
							Crystal Lake, IL 60014		Rockford, IL 61107	
						Proposal Guarantee:	$86,818.47		$90,756.47	
						Terms:	n/a		n/a	
				Approved Engineer's Estimate						
Item No.	Item	Unit	Quantity	Unit Price	Total	Unit Price	Total		Unit Price	Total
44000155	HOT-MIX ASPHALT SURFACE REMOVAL, 1 1/2"	SQ YD	5,317	$4.00	$21,268.89	$2.75	$14,621.75		$4.65	$24,724.05
44000200	DRIVEWAY PAVEMENT REMOVAL	SQ YD	684	$11.50	$7,869.83	$13.44	$9,192.96		$6.10	$4,172.40
44004250	PAVED SHOULDER REMOVAL	SQ YD	4,102	$11.25	$46,148.75	$14.00	$57,428.00		$7.25	$29,739.50
44213200	SAWCUT EXISTING PAVEMENT	FOOT	5,207	$4.25	$22,129.75	$3.00	$15,621.00		$1.10	$5,727.70
48100500	AGGREGATE SHOULDERS, TYPE A 6"	SQ YD	501	$14.25	$7,142.42	$14.00	$7,014.00		$12.80	$6,412.80
50104400	CONCRETE HEADWALL REMOVAL	EACH	2	$1,115.00	$2,230.00	$2,820.00	$5,640.00		$314.00	$628.00
50105220	PIPE CULVERT REMOVAL	FOOT	479	$18.00	$8,622.00	$23.50	$11,256.50		$18.80	$9,005.20
542A0217	PIPE CULVERTS, CLASS A, TYPE 1, 12" (RCP)	FOOT	159	$55.00	$8,745.00	$45.12	$7,174.08		$69.20	$11,002.80
542A0220	PIPE CULVERTS, CLASS A, TYPE 1, 15" (RCP)	FOOT	221	$62.00	$13,702.00	$46.06	$10,179.26		$79.20	$17,503.20
542A0223	PIPE CULVERTS, CLASS A, TYPE 1, 18" (RCP)	FOOT	55	$70.00	$3,850.00	$47.00	$2,585.00		$78.20	$4,301.00
542A0229	PIPE CULVERTS, CLASS A, TYPE 1, 24" (RCP)	FOOT	98	$75.00	$7,350.00	$77.08	$7,553.84		$107.00	$10,486.00
542A0235	PIPE CULVERTS, CLASS A, TYPE 1, 30" (RCP)	FOOT	48	$100.00	$4,800.00	$333.70	$16,017.60		$138.00	$6,624.00
542A5473	PIPE CULVERTS, CLASS A, TYPE 1 EQUIVALENT ROUND-SIZE 18" (RCP)	FOOT	111	$78.00	$8,658.00	$58.28	$6,469.08		$119.00	$13,209.00
542C0229	PIPE CULVERTS, CLASS C, TYPE 1, 24" (CMP)	FOOT	78	$70.00	$5,460.00	$77.08	$6,012.24		$117.00	$9,126.00
542C5470	PIPE CULVERTS, CLASS C, TYPE 1 EQUIVALENT ROUND-SIZE 15" (CMP)	FOOT	113	$65.00	$7,345.00	$56.40	$6,373.20		$97.10	$10,972.30
54213450	END SECTIONS, 15"	EACH	6	$400.00	$2,400.00	$2,068.00	$12,408.00		$598.00	$3,588.00
54213453	END SECTIONS, 18"	EACH	1	$500.00	$500.00	$2,538.00	$2,538.00		$635.00	$635.00
54213657	PRECAST REINFORCED CONCRETE FLARED END SECTIONS 12"	EACH	3	$900.00	$2,700.00	$1,692.00	$5,076.00		$1,194.00	$3,582.00
54213660	PRECAST REINFORCED CONCRETE FLARED END SECTIONS 15"	EACH	4	$790.00	$3,160.00	$1,786.00	$7,144.00		$1,234.00	$4,936.00
54213669	PRECAST REINFORCED CONCRETE FLARED END SECTIONS 24"	EACH	2	$1,040.00	$2,080.00	$2,068.00	$4,136.00		$1,490.00	$2,980.00
54214293	END SECTIONS, EQUIVALENT ROUND-SIZE 18"	EACH	6	$550.00	$3,300.00	$3,088.00	$18,528.00		$2,418.00	$14,508.00
	*GRATING FOR CONCRETE FLARED END SECTION 12"	EACH	3	$475.00	$1,425.00	$0.01	$0.03		$354.00	$1,062.00
54247124	GRATING FOR CONCRETE FLARED END SECTION 15"	EACH	4	$490.00	$1,960.00	$0.01	$0.04		$354.00	$1,416.00
54247130	GRATING FOR CONCRETE FLARED END SECTION 24"	EACH	2	$670.00	$1,340.00	$0.01	$0.02		$354.00	$708.00
54262724	METAL FLARED END SECTIONS 24"	EACH	2	$430.00	$860.00	$591.00	$1,182.00		$520.00	$1,040.00

JACOB & HEFNER
ASSOCIATES

1333 Butterfield Road, Suite 300
Downers Grove, IL 60515
P 630-652-4600
F 630-652-4601

Local Public Agency: City of DeKalb
County: DeKalb
Section: 20-00197-00-WR

Date: 8/30/2021
Time: 2:00 PM
Appropriation:
Estimate: $1,673,627.31

Attended By: n/a

						Name of Bidder:	Curran Contracting Company		William Charles Construction	
						Address of Bidder:	286 Memorial Court		833 Featherstone Road	
							Crystal Lake, IL 60014		Rockford, IL 61107	
						Proposal Guarantee:	$86,818.47		$90,756.47	
						Terms:	n/a		n/a	
				Approved Engineer's Estimate						
Item No.	Item	Unit	Quantity	Unit Price	Total	Unit Price	Total		Unit Price	Total
54262815	METAL FLARED END SECTIONS, EQUIVALENT ROUND-SIZE 15"	EACH	4	$390.00	$1,560.00	$471.00	$1,884.00		$785.00	$3,140.00
550A0380	STORM SEWERS, CLASS A, TYPE 2 18"	FOOT	199	$80.50	$16,019.50	$47.94	$9,540.06		$63.00	$12,537.00
55100500	STORM SEWER REMOVAL 12" (12" CLAY DRAINTILE)	FOOT	37	$24.15	$893.55	$23.50	$869.50		$17.50	$647.50
56400300	*FIRE HYDRANTS TO BE ADJUSTED	EACH	1	$1,550.00	$1,550.00	$2,762.00	$2,762.00		$1,659.00	$1,659.00
60200805	CATCH BASINS, TYPE A, 4'-DIAMETER, TYPE 8 GRATE	EACH	1	$3,000.00	$3,000.00	$3,008.00	$3,008.00		$2,516.00	$2,516.00
60218400	MANHOLES, TYPE A, 4'-DIAMETER, TYPE 1 FRAME, CLOSED LID	EACH	1	$3,105.00	$3,105.00	$2,256.00	$2,256.00		$3,023.00	$3,023.00
60221100	MANHOLES, TYPE A, 5'-DIAMETER, TYPE 1 FRAME, CLOSED LID	EACH	1	$5,750.00	$5,750.00	$2,914.00	$2,914.00		$3,691.00	$3,691.00
60255500	MANHOLES TO BE ADJUSTED	EACH	1	$743.00	$743.00	$846.00	$846.00		$762.00	$762.00
60500060	REMOVE INLETS	EACH	1	$465.00	$465.00	$1,598.00	$1,598.00		$354.00	$354.00
67100100	*MOBILIZATION	LSUM	1	$20,000.00	$20,000.00	$125,550.00	$125,550.00		$180,000.00	$180,000.00
70100450	TRAFFIC CONTROL AND PROTECTION, STANDARD 701201	LSUM	1	$8,000.00	$8,000.00	$1.00	$1.00		$100.00	$100.00
70100460	TRAFFIC CONTROL AND PROTECTION, STANDARD 701306	LSUM	1	$8,000.00	$8,000.00	$1.00	$1.00		$100.00	$100.00
70100500	TRAFFIC CONTROL AND PROTECTION, STANDARD 701326	LSUM	1	$8,000.00	$8,000.00	$1.00	$1.00		$100.00	$100.00
70102620	TRAFFIC CONTROL AND PROTECTION, STANDARD 701501	LSUM	1	$8,000.00	$8,000.00	$500.00	$500.00		$100.00	$100.00
70102622	TRAFFIC CONTROL AND PROTECTION, STANDARD 701502	LSUM	1	$5,000.00	$5,000.00	$1.00	$1.00		$100.00	$100.00
70102635	TRAFFIC CONTROL AND PROTECTION, STANDARD 701701	LSUM	1	$5,000.00	$5,000.00	$1.00	$1.00		$100.00	$100.00
70300904	*PAVEMENT MARKING TAPE, TYPE IV 4"	FOOT	12,661	$1.05	$13,294.05	$1.00	$12,661.00		$1.10	$13,927.10
70300924	*PAVEMENT MARKING TAPE, TYPE IV 24"	FOOT	20	$5.50	$110.00	$7.00	$140.00		$6.60	$132.00
72000100	SIGN PANEL - TYPE 1	SQ FT	79	$34.50	$2,738.44	$20.00	$1,580.00		$25.00	$1,975.00
72000200	SIGN PANEL - TYPE 2	SQ FT	65	$40.25	$2,596.13	$32.00	$2,080.00		$30.00	$1,950.00
72300100	INSTALL EXISTING SIGN PANEL	SQ FT	2	$30.00	$60.00	$85.00	$170.00		$50.00	$100.00
72400100	REMOVE SIGN PANEL ASSEMBLY - TYPE A	EACH	5	$130.00	$650.00	$50.00	$250.00		$50.00	$250.00
72400310	REMOVE SIGN PANEL - TYPE 1	SQ FT	23	$21.00	$472.50	$15.00	$345.00		$20.00	$460.00
72400500	RELOCATE SIGN PANEL ASSEMBLY - TYPE A	EACH	3	$245.00	$735.00	$100.00	$300.00		$200.00	$600.00
72400600	RELOCATE SIGN PANEL ASSMEBLY - TYPE B	EACH	1	$340.00	$340.00	$150.00	$150.00		$250.00	$250.00
73000100	WOOD SIGN SUPPORT	FOOT	252	$23.00	$5,796.00	$36.00	$9,072.00		$25.00	$6,300.00

JACOB & HEFNER ASSOCIATES
1333 Butterfield Road, Suite 300
Downers Grove, IL 60515
P 630-652-4600
F 630-652-4601

Local Public Agency: City of DeKalb
County: DeKalb
Section: 20-00197-00-WR

Date: 8/30/2021
Time: 2:00 PM
Appropriation:
Estimate: $1,673,627.31

Attended By: n/a

				Name of Bidder:		Curran Contracting Company		William Charles Construction	
				Address of Bidder:		286 Memorial Court Crystal Lake, IL 60014		833 Featherstone Road Rockford, IL 61107	
				Proposal Guarantee:		$86,818.47		$90,756.47	
				Terms:		n/a		n/a	
				Approved Engineer's Estimate					
Item No.	Item	Unit	Quantity	Unit Price	Total	Unit Price	Total	Unit Price	Total
78000100	THERMOPLASTIC PAVEMENT MARKING - LETTERS AND SYMBOLS	SQ FT	211	$7.00	$1,475.60	$4.50	$949.50	$4.50	$949.50
78000200	THERMOPLASTIC PAVEMENT MARKING - LINE 4"	FOOT	1,146	$0.85	$973.68	$1.20	$1,375.20	$1.20	$1,375.20
78000600	THERMOPLASTIC PAVEMENT MARKING - LINE 12"	FOOT	403	$2.75	$1,108.25	$3.85	$1,551.55	$3.85	$1,551.55
78003180	PERFORMED PLASTIC PAVEMENT MARKING, TYPE B - 24" (GROOVED)	FOOT	107	$12.00	$1,284.00	$82.60	$8,838.20	$82.60	$8,838.20
78100100	RAISED REFLECTIVE PAVEMENT MARKER	EACH	119	$39.25	$4,670.75	$66.90	$7,961.10	$66.90	$7,961.10
78300200	RAISED REFLECTIVE PAVEMENT MARKER REMOVAL	EACH	35	$21.00	$735.00	$15.00	$525.00	$23.80	$833.00
78300201	PAVEMENT MARKING REMOVAL - GRINDING	SQ FT	1,303	$4.25	$5,536.69	$0.90	$1,172.70	$3.00	$3,909.00
78300202	PAVEMENT MARKING REMOVAL - WATER BLASTING	SQ FT	483	$6.00	$2,900.00	$4.25	$2,052.75	$3.00	$1,449.00
X0322936	*REMOVE EXISTING FLARED END SECTION	EACH	24	$285.00	$6,840.00	$141.00	$3,384.00	$21.80	$523.20
X0326806	*WASHOUT BASIN	LSUM	1	$3,300.00	$3,300.00	$1,331.79	$1,331.79	$1,512.00	$1,512.00
X0327301	*RELOCATE EXISTING MAILBOX	EACH	12	$230.00	$2,760.00	$474.53	$5,694.36	$175.00	$2,100.00
X0327366	*TEMPORARY AGGREGATE WEDGE	TON	13	$28.50	$383.25	$16.00	$208.00	$100.00	$1,300.00
	*CONCRETE COLLARS	EACH	4	$1,850.00	$7,400.00	$470.00	$1,880.00	$2,536.00	$10,144.00
X1700063	*CONCRETE HEADWALL (SPECIAL)	EACH	2	$10,000.00	$20,000.00	$8,500.00	$17,000.00	$6,688.00	$13,376.00
X2200020	*FENCE REMOVAL AND REINSTALLATION	FOOT	130	$75.00	$9,750.00	$87.76	$11,408.80	$87.80	$11,414.00
X2700017	*GROOVED THERMOPLASTIC PAVEMENT MARKING - 4"	FOOT	14,938	$1.30	$19,419.40	$1.30	$19,419.40	$1.30	$19,419.40
X2700018	*GROOVED THERMOPLASTIC PAVEMENT MARKING - 6"	FOOT	253	$4.05	$1,025.66	$1.95	$493.35	$1.95	$493.35
	*GROOVED THERMOPLASTIC PAVEMENT MARKING - 8"	FOOT	1,458	$3.00	$4,372.50	$2.60	$3,790.80	$2.60	$3,790.80
X4810200	*AGGREGATE SHOULDER REMOVAL	CU YD	1,019	$24.50	$24,954.61	$5.19	$5,288.61	$13.50	$13,756.50
X7010216	*TRAFFIC CONTROL AND PROTECTION, (SPECIAL)	LSUM	1	$10,000.00	$10,000.00	$15,295.00	$15,295.00	$8,750.00	$8,750.00
X7030005	*TEMPORARY PAVEMENT MARKING REMOVAL	SQ FT	5,609	$1.25	$7,011.67	$0.30	$1,682.70	$0.30	$1,682.70
Z0019500	*DRYWELL	EACH	1	$3,700.00	$3,700.00	$1,880.00	$1,880.00	$5,791.00	$5,791.00
Z0029602	*TEMPORARY SIGNING	EACH	20	$415.00	$8,300.00	$150.00	$3,000.00	$100.00	$2,000.00
Z0030850	*TEMPORARY INFORMATION SIGNING	SQ FT	84	$23.00	$1,932.00	$14.00	$1,176.00	$20.00	$1,680.00
Z0033700	*LONGITUDINAL JOINT SEALANT	FOOT	9,395	$1.75	$16,441.25	$2.25	$21,138.75	$2.55	$23,957.25

JACOB & HEFNER
ASSOCIATES

1333 Butterfield Road, Suite 300
Downers Grove, IL 60515
P 630-652-4600
F 630-652-4601

Local Public Agency: City of DeKalb
County: DeKalb
Section: 20-00197-00-WR

Date: 8/30/2021
Time: 2:00 PM
Appropriation:
Estimate: $1,673,627.31

Attended By: n/a

						Name of Bidder:	Curran Contracting Company		William Charles Construction	
						Address of Bidder:	286 Memorial Court		833 Featherstone Road	
							Crystal Lake, IL 60014		Rockford, IL 61107	
						Proposal Guarantee:	$86,818.47		$90,756.47	
						Terms:	n/a		n/a	
				Approved Engineer's Estimate						
Item No.	Item	Unit	Quantity	Unit Price	Total	Unit Price	Total		Unit Price	Total
	*24" HDPE N-12 PIPE	FOOT	385	$75.00	$28,875.00	$73.32	$28,228.20		$86.30	$33,225.50
	*REESTABLISH EXISTING BENCHMARK	EACH	1	$290.00	$290.00	$750.00	$750.00		$750.00	$750.00
	*FENCE POST REMOVAL	EACH	1	$75.00	$75.00	$100.00	$100.00		$184.00	$184.00
70106800	CHANGEABLE MESSAGE SIGN	CAL MO	1	$6,000.00	$6,000.00	$850.00	$850.00		$1,250.00	$1,250.00
72000100	SIGN PANEL - TYPE 1	SQ FT	73	$35.00	$2,555.00	$32.00	$2,336.00		$55.00	$4,015.00
80500010	SERVICE INSTALLATION - GROUND MOUNTED	EACH	1	$4,000.00	$4,000.00	$2,150.00	$2,150.00		$3,828.00	$3,828.00
81028170	UNDERGROUND CONDUIT, GALVANIZED STEEL, 1 1/4" DIA.	FOOT	12	$18.00	$216.00	$23.70	$284.40		$19.80	$237.60
81028240	UNDERGROUND CONDUIT, GALVANIZED STEEL, 4" DIA.	FOOT	307	$42.00	$12,894.00	$59.50	$18,266.50		$62.80	$19,279.60
81028340	UNDERGROUND CONDUIT, PVC, 1 1/2" DIA.	FOOT	735	$6.00	$4,410.00	$16.75	$12,311.25		$7.60	$5,586.00
81028350	UNDERGROUND CONDUIT, PVC, 2" DIA.	FOOT	29	$10.00	$290.00	$28.90	$838.10		$8.65	$250.85
81028370	UNDERGROUND CONDUIT, PVC, 3" DIA.	FOOT	150	$12.00	$1,800.00	$33.90	$5,085.00		$42.80	$6,420.00
81028390	UNDERGROUND CONDUIT, PVC, 4" DIA.	FOOT	4	$19.00	$76.00	$58.20	$232.80		$44.80	$179.20
81400700	HANDHOLE, PORTLAND CEMENT CONCRETE	EACH	4	$2,000.00	$8,000.00	$2,270.00	$9,080.00		$2,244.00	$8,976.00
81400720	DOUBLE HANDHOLE, PORTLAND CEMENT CONCRETE	EACH	1	$2,400.00	$2,400.00	$3,500.00	$3,500.00		$3,664.00	$3,664.00
81702110	ELECTRIC CABLE IN CONDUIT, 600V (XLP-TYPE USE) 1/C NO. 10	FOOT	2700	$1.40	$3,780.00	$1.10	$2,970.00		$1.70	$4,590.00
81702450	ELECTRIC CABLE IN CONDUIT, 600V (XLP-TYPE USE) 3-1/C NO. 10	FOOT	889.5	$2.00	$1,779.00	$2.50	$2,223.75		$2.90	$2,579.55
82102250	LUMINAIRE, LED, ROADWAY, G	EACH	4	$550.00	$2,200.00	$765.00	$3,060.00		$823.00	$3,292.00
86200101	UNINTERRUPTABLE POWER SUPPLY	EACH	1	$2,000.00	$2,000.00	$5,850.00	$5,850.00		$5,115.00	$5,115.00
87301225	ELECTRIC CABLE IN CONDUIT, SIGNAL NO. 14 3C	FOOT	603	$1.40	$844.20	$1.39	$838.17		$1.75	$1,055.25
87301245	ELECTRIC CABLE IN CONDUIT, SIGNAL NO. 14 5C	FOOT	1947.5	$1.60	$3,116.00	$1.52	$2,960.20		$2.15	$4,187.13
87301255	ELECTRIC CABLE IN CONDUIT, SIGNAL NO. 14 7C	FOOT	2440.5	$1.90	$4,636.95	$1.69	$4,124.45		$2.30	$5,613.15
87301805	ELECTRIC CABLE IN CONDUIT, SERVICE, NO. 6 2 C	FOOT	57	$4.50	$256.50	$2.90	$165.30		$8.65	$493.05
87301900	ELECTRIC CABLE IN CONDUIT, EQUIPMENT GROUNDING CONDUCTOR, NO. 6 1C	FOOT	501.5	$2.00	$1,003.00	$2.55	$1,278.83		$2.55	$1,278.83
87502500	TRAFFIC SIGNAL POST, GALVANIZED STEEL 16 FT.	EACH	4	$1,200.00	$4,800.00	$1,090.00	$4,360.00		$1,284.00	$5,136.00
87702950	STEEL COMBINATION MAST ARM ASSEMBLY AND POLE 44 FT.	EACH	1	$10,000.00	$10,000.00	$19,620.00	$19,620.00		$24,240.00	$24,240.00
87702970	STEEL COMBINATION MAST ARM ASSEMBLY AND POLE 48 FT.	EACH	1	$12,000.00	$12,000.00	$21,885.00	$21,885.00		$26,780.00	$26,780.00

JACOB & HEFNER ASSOCIATES
1333 Butterfield Road, Suite 300
Downers Grove, IL 60515
P 630-652-4600
F 630-652-4601

Local Public Agency: City of DeKalb
County: DeKalb
Section: 20-00197-00-WR

Date: 8/30/2021
Time: 2:00 PM
Appropriation:
Estimate: $1,673,627.31

Attended By: n/a

						Name of Bidder:	Curran Contracting Company		William Charles Construction	
						Address of Bidder:	286 Memorial Court		833 Featherstone Road	
							Crystal Lake, IL 60014		Rockford, IL 61107	
						Proposal Guarantee:	$86,818.47		$90,756.47	
						Terms:	n/a		n/a	
				Approved Engineer's Estimate						
Item No.	Item	Unit	Quantity	Unit Price	Total		Unit Price	Total	Unit Price	Total
87702980	STEEL COMBINATION MAST ARM ASSEMBLY AND POLE 50 FT.	EACH	1	$14,000.00	$14,000.00		$21,995.00	$21,995.00	$27,080.00	$27,080.00
87702985	STEEL COMBINATION MAST ARM ASSEMBLY AND POLE 52 FT.	EACH	1	$16,000.00	$16,000.00		$22,440.00	$22,440.00	$26,940.00	$26,940.00
87800100	CONCRETE FOUNDATION, TYPE A	FOOT	12	$250.00	$3,000.00		$240.00	$2,880.00	$289.00	$3,468.00
87800150	CONCRETE FOUNDATION, TYPE C	FOOT	3	$375.00	$1,125.00		$695.00	$2,085.00	$1,480.00	$4,440.00
87800415	CONCRETE FOUNDATION, TYPE E 36-INCH DIAMETER	FOOT	56	$250.00	$14,000.00		$330.00	$18,480.00	$356.00	$19,936.00
88040020	SIGNAL HEAD, POLYCARBONATE, LED, 1-FACE, 1-SECTION, BRACKET MOUNTED	EACH	1	$500.00	$500.00		$405.00	$405.00	$417.00	$417.00
88040070	SIGNAL HEAD, POLYCARBONATE, LED, 1-FACE, 3-SECTION, BRACKET MOUNTED	EACH	2	$950.00	$1,900.00		$810.00	$1,620.00	$1,005.00	$2,010.00
88040090	SIGNAL HEAD, POLYCARBONATE, LED, 1-FACE, 3-SECTION, MAST ARM MOUNTED	EACH	5	$990.00	$4,950.00		$915.00	$4,575.00	$1,118.00	$5,590.00
88040150	SIGNAL HEAD, POLYCARBONATE, LED, 1-FACE, 5-SECTION, BRACKET MOUNTED	EACH	5	$1,405.00	$7,025.00		$1,120.00	$5,600.00	$1,413.00	$7,065.00
88040160	SIGNAL HEAD, POLYCARBONATE, LED, 1-FACE, 5-SECTION, MAST ARM MOUNTED	EACH	5	$1,465.00	$7,325.00		$1,230.00	$6,150.00	$1,537.00	$7,685.00
88200410	TRAFFIC SIGNAL BACKPLATE, LOUVERED, FORMED PLASTIC	EACH	17	$280.00	$4,760.00		$245.00	$4,165.00	$183.00	$3,111.00
88700090	CONFIRMATION BEACON	EACH	2	$750.00	$1,500.00		$90.00	$180.00	$240.00	$480.00
88700200	LIGHT DETECTOR	EACH	2	$1,500.00	$3,000.00		$1,630.00	$3,260.00	$833.00	$1,666.00
88700300	LIGHT DETECTOR AMPLIFIER	EACH	1	$2,600.00	$2,600.00		$2,780.00	$2,780.00	$2,038.00	$2,038.00
X1400215	REMOTE-CONTROLLED VIDEO SYSTEM	EACH	1	$50,000.00	$50,000.00		$28,660.00	$28,660.00	$25,980.00	$25,980.00
X8250091	COMBINATION LIGHTING CONTROLLER	EACH	1	$8,000.00	$8,000.00		$1,490.00	$1,490.00	$1,539.00	$1,539.00
X0324085	EMERGENCY VEHICLE PRIORITY SYSTEM LINE SENSOR CABLE, NO. 20 3/C	FOOT	619	$2.00	$1,238.00		$2.10	$1,299.90	$1.40	$866.60
X8570226	FULL-ACTUATED CONTROLLER AND TYPE IV CABINET, SPECIAL	EACH	1	$20,000.00	$20,000.00		$22,900.00	$22,900.00	$20,090.00	$20,090.00
Z0033072	VIDEO VEHICLE DETECTION SYSTEM	EACH	1	$25,000.00	$25,000.00		$154,000.00	$154,000.00	$151,410.00	$151,410.00
X0325839	PERMANENT TRAFFIC SIGNAL TIMING	EACH	1	$4,000.00	$4,000.00		$1,890.00	$1,890.00	$1,439.00	$1,439.00
				Total Bid:		As Read:		$1,736,419.37		$1,815,129.48
						As Calculated:		$1,736,369.37		$1,815,129.47

Illinois Department of Transportation

Local Public Agency Formal Contract

Contractor's Name
Curran Contracting Company

Contractor's Address	City	State	Zip Code
286 Memorial Court	Crystal Lake	IL	60014

STATE OF ILLINOIS

Local Public Agency	County	Section Number
City of DeKalb	DeKalb	20-00197-00-WR

Street Name/Road Name	Type of Funds
IL Route 23 and Gurler Road	EDP and Local

☒ CONTRACT BOND (when required)

For a County and Road District Project

Submitted/Approved

Highway Commissioner Signature	Date

Submitted/Approved

County Engineer/Superintendent of Highways	Date

For a Municipal Project

Submitted/Approved/Passed

Signature	Date
	9-20-21

Official Title
City Engineer

Department of Transportation

☒ Concurrence in approval of award

Regional Engineer Signature	Date
	9/28/2021

Local Public Agency	Local Street/Road Name	County	Section Number
City of DeKalb	IL Route 23 and Gurler Road	DeKalb	20-00197-00-WR

1. THIS AGREEMENT, made and concluded the 20th (Day) day of September 2021 (Month and Year) between the City (Local Public Agency Type) of DeKalb (Local Public Agency), known as the party of the first part, and Curran Contracting Company (Contractor), its successor, and assigns, known as the party of the second part.

2. For and in consideration of the payments and agreements mentioned in the Proposal hereto attached, to be made and performed by the party of the first part, and according to the terms expressed in the Bond referring this contract, the party of the second part agrees with said party of the first part, at its own proper cost and expense, to do all the work, furnish all materials and all labor necessary to complete the work in accordance with the plans and specifications hereinafter described, and in full compliance with all of the terms of this contract.

3. It is also understood and agreed that the LPA Formal Contract Proposal, Special Provisions, Affidavit of Illinois Business Office, Apprenticeship or Training Program Certification, and Contract Bond hereto attached, and the Plans for Section 20-00197-00-WR (Section Number) in City of DeKalb (Local Public Agency), approved by the Illinois Department of Transportation on _____ (Date), are essential documents of this contract and are a part hereof.

4. IN WITNESS WHEREOF, the said parties have executed this contract on the date above mentioned.

The City (Local Public Agency Type) of DeKalb (Name of Local Public Agency)

Attest:

~~Clerk~~ Executive Asst.

Date: 9/20/21

(SEAL)

CITY OF DEKALB STATE OF ILLINOIS

Party of the First Part

By: [signature] Date: 9/20/21

(If a Corporation)

Corporate Name: Curran Contracting Company

President, Party of the Second Part

By: [signature] Date: 9/16/2021

NICK SCHRAM, VICE PRESIDENT

(SEAL)

(If a Limited Liability Corporation)

LLC Name:

Manager or Authorized Member, Party of the Second Part

By:

CURRAN CONTRACTING COMPANY CORP. ★ ILLINOIS CORPORATE SEAL 1987

(If a Partnership)

Partner: Date:

Partner: Date:

Attest:

Secretary: [signature] Date: 9/16/2021

(SEAL)

Partners doing Business under the firm name of

Party of the Second Part

(If an individual)

Party of the Second Part: Date:

Bond No. 30135689
Executed in Duplicate

Illinois Department of Transportation

Contract Bond

Local Public Agency	County	Street Name/Road Name	Section Number
City of DeKalb	DeKalb	IL Route 23 and Gurler Roa	20-00197-00-WR

Bond information to be returned to Local Public Agency at City of DeKalb, 1216 Market Street, DeKalb, IL 60115
Complete Address

We, Curran Contracting Company
Contractor's Name and Address

a/an Corporation organized under the laws of the State of Illinois as PRINCIPAL, and
State

Continental Casualty Company 151 N. Franklin St., CHICAGO, IL 60606
Surety Name and Address

as SURETY, are held and firmly bound unto the above Local Public Agency (thereafter referred to as "LPA") in the penal sum of

One Million Seven Hundred Thirty-Six Thousand Four Hundred Nineteen and 37/100 Dollars

Dollars ($1,736,419.37) lawful money of the United States, to be paid to said LPA, the payment of which we bind ourselves, successors and assigns jointly to pay to the LPA this sum under the conditions of this instrument.

WHEREAS, THE CONDITION OF THE FOREGOING OBLIGATION IS SUCH that the said Principal has entered into a written contract with the LPA acting through its awarding authority for the construction of work on the above sections, which contract is hereby referred to and made a part hereof, as if written herein at length, and whereby the said Principal has promised and agreed to perform said work in accordance with the terms of said contract, and has promised to pay all sums of money due for any labor, materials, apparatus, fixtures or machinery furnished to such Principal for the purpose of performing such work and has further agreed to pay all direct and indirect damages to any person, firm, company or corporation to whom any money may be due from the Principal, subcontractor or otherwise for any such labor, materials, apparatus, fixtures or machinery so furnished and that suit may be maintained on such bond by any such person, firm, company or corporation for the recovery of any such money.

NOW, THEREFORE, if the said Principal shall perform said work in accordance with the terms of said contract, and shall pay all sums of money due or to become due for any labor, materials, apparatus, fixtures or machinery furnished to it for the purpose of constructing such work, and shall commence and complete the work within the time prescribed in said contract, and shall pay and discharge all damages, direct and indirect, that may be suffered or sustained on account of such work during the time of the performance thereof and until the said work shall have been accepted, and shall hold the LPA and its awarding authority harmless on account of any such damages and shall in all respects fully and faithfully comply with all the provisions, conditions and requirements of said contract, then this obligation shall be void; otherwise it shall remain in full force and effect.

IN TESTIMONY WHEREOF, the said PRINCIPAL and the said SURETY have caused this instrument to be signed by their respective agents this 16th day of September 2021
Day Month and Year

PRINCIPAL

Company Name	Company Name
Curran Contracting Company	

By		By	
Signature & Title	Date	Signature & Title	Date
V.P.	9/16/2021		
Attest		**Attest**	
Signature & Title	Date	Signature & Title	Date
ASST. SECRETARY	9/16/2021		

CURRAN CONTRACTING CORPORATION 1987 ILLINOIS SEAL

(If PRINCIPAL is a joint venture of two or more contractors, the company names and authorized signature of each contractor must be affixed.)

STATE OF IL

COUNTY OF ILLINOIS

I, JEANNINE GARRIEPY, a Notary Public in and for said county, do hereby certify that
Notary Name

MICHAEL PACHLA AND KIM BOLTNOWSKI
Insert name of Individuals signing on behalf of PRINCIPAL

who is/are each personally known to me to be the same person(s) whose name(s) is/are subscribed to the foregoing instrument on behalf of PRINCIPAL, appeared before me this day in person and acknowledged respectively, that he/she/they signed and delivered said instrument freely and voluntarily for the uses and purposes therein set forth.

Given under my hand and notarial seal this 16th day of SEPTEMBER 2021
Day Month, Year

(SEAL)

OFFICIAL SEAL
JEANNINE L GARRIEPY
NOTARY PUBLIC - STATE OF ILLINOIS
MY COMMISSION EXPIRES:11/17/24

Notary Public Signature

Date commission expires 11/17/24

SURETY

Name of Surety: Continental Casualty Company

Title

By:

Donna M Planeta, Attorney-in-fact

STATE OF CT

COUNTY OF HARTFORD

I, Timothy S Huffman, a Notary Public in and for said county, do hereby certify that
Notary Name

Donna M Planeta
Insert name of Individuals signing on behalf of SURETY

who is/are each personally known to me to be the same person(s) whose name(s) is/are subscribed to the foregoing instrument on behalf of SURETY, appeared before me this day in person and acknowledged respectively, that he/she/they signed and delivered said instrument freely and voluntarily for the uses and purposes therein set forth.

Given under my hand and notarial seal this 16th day of September, 2021
Day Month, Year

(SEAL)

TIMOTHY S. HUFFMAN
NOTARY PUBLIC - CT 183092
My Commission Expires Feb. 28, 2026

Notary Public Signature

Date commission expires February 28th, 2026

Approved this 21 day of Sept. 2021
Day Month, Year

Attest:

Local Public Agency ~~Clerk~~ Exc. Asst. Signature

Date 9/21/21

City ~~Clerk~~ Exc. Asst.
Local Public Agency Type

Awarding Authority: City of DeKalb

Awarding Authority Signature

Date 9/20/21

POWER OF ATTORNEY APPOINTING INDIVIDUAL ATTORNEY-IN-FACT

Know All Men By These Presents, That Continental Casualty Company, an Illinois insurance company, National Fire Insurance Company of Hartford, an Illinois insurance company, and American Casualty Company of Reading, Pennsylvania, a Pennsylvania insurance company (herein called "the CNA Companies"), are duly organized and existing insurance companies having their principal offices in the City of Chicago, and State of Illinois, and that they do by virtue of the signatures and seals herein affixed hereby make, constitute and appoint

Donna M Planeta, Joshua Sanford, Aimee R Perondine, Michelle Anne McMahon, Rebecca M Josephson, Bryan M Caneschi, Bethany Stevenson, Individually

of Hartford, CT, their true and lawful Attorney(s)-in-Fact with full power and authority hereby conferred to sign, seal and execute for and on their behalf bonds, undertakings and other obligatory instruments of similar nature

- In Unlimited Amounts -

and to bind them thereby as fully and to the same extent as if such instruments were signed by a duly authorized officer of their insurance companies and all the acts of said Attorney, pursuant to the authority hereby given is hereby ratified and confirmed.

This Power of Attorney is made and executed pursuant to and by authority of the By-Law and Resolutions, printed on the reverse hereof, duly adopted, as indicated, by the Boards of Directors of the insurance companies.

In Witness Whereof, the CNA Companies have caused these presents to be signed by their Vice President and their corporate seals to be hereto affixed on this 23rd day of July, 2021.

Continental Casualty Company
National Fire Insurance Company of Hartford
American Casualty Company of Reading, Pennsylvania

Paul T. Bruflat — Vice President

State of South Dakota, County of Minnehaha, ss:

On this 23rd day of July, 2021, before me personally came Paul T. Bruflat to me known, who, being by me duly sworn, did depose and say: that he resides in the City of Sioux Falls, State of South Dakota; that he is a Vice President of Continental Casualty Company, an Illinois insurance company, National Fire Insurance Company of Hartford, an Illinois insurance company, and American Casualty Company of Reading, Pennsylvania, a Pennsylvania insurance company described in and which executed the above instrument; that he knows the seals of said insurance companies; that the seals affixed to the said instrument are such corporate seals; that they were so affixed pursuant to authority given by the Boards of Directors of said insurance companies and that he signed his name thereto pursuant to like authority, and acknowledges same to be the act and deed of said insurance companies.

M. BENT
NOTARY PUBLIC
SOUTH DAKOTA

My Commission Expires March 2, 2026

M. Bent — Notary Public

CERTIFICATE

I, D. Johnson, Assistant Secretary of Continental Casualty Company, an Illinois insurance company, National Fire Insurance Company of Hartford, an Illinois insurance company, and American Casualty Company of Reading, Pennsylvania, a Pennsylvania insurance company do hereby certify that the Power of Attorney herein above set forth is still in force, and further certify that the By-Law and Resolution of the Board of Directors of the insurance companies printed on the reverse hereof is still in force. In testimony whereof I have hereunto subscribed my name and affixed the seal of the said insurance companies this 16th day of September, 2021.

Continental Casualty Company
National Fire Insurance Company of Hartford
American Casualty Company of Reading, Pennsylvania

D. Johnson — Assistant Secretary

Form F6853-4/2012

Go to www.cnasurety.com > Owner / Obligee Services > Validate Bond Coverage, if you want to verify bond authenticity.

Authorizing By-Laws and Resolutions

ADOPTED BY THE BOARD OF DIRECTORS OF CONTINENTAL CASUALTY COMPANY:

This Power of Attorney is made and executed pursuant to and by authority of the following resolution duly adopted by the Board of Directors of the Company at a meeting held on May 12, 1995:

"RESOLVED: That any Senior or Group Vice President may authorize an officer to sign specific documents, agreements and instruments on behalf of the Company provided that the name of such authorized officer and a description of the documents, agreements or instruments that such officer may sign will be provided in writing by the Senior or Group Vice President to the Secretary of the Company prior to such execution becoming effective."

This Power of Attorney is signed by Paul T. Bruflat, Vice President, who has been authorized pursuant to the above resolution to execute power of attorneys on behalf of Continental Casualty Company.

This Power of Attorney is signed and sealed by facsimile under and by the authority of the following Resolution adopted by the Board of Directors of the Company by unanimous written consent dated the 25th day of April, 2012:

"Whereas, the bylaws of the Company or specific resolution of the Board of Directors has authorized various officers (the "Authorized Officers")to execute various policies, bonds, undertakings and other obligatory instruments of like nature; and

Whereas, from time to time, the signature of the Authorized Officers, in addition to being provided in original, hard copy format, may be provided via facsimile or otherwise in an electronic format (collectively, "Electronic Signatures"); Now therefore be it resolved: that the Electronic Signature of any Authorized Officer shall be valid and binding on the Company. "

ADOPTED BY THE BOARD OF DIRECTORS OF NATIONAL FIRE INSURANCE COMPANY OF HARTFORD:

This Power of Attorney is made and executed pursuant to and by authority of the following resolution duly adopted by the Board of Directors of the Company by unanimous written consent dated May 10, 1995:

"RESOLVED: That any Senior or Group Vice President may authorize an officer to sign specific documents, agreements and instruments on behalf of the Company provided that the name of such authorized officer and a description of the documents, agreements or instruments that such officer may sign will be provided in writing by the Senior or Group Vice President to the Secretary of the Company prior to such execution becoming effective."

This Power of Attorney is signed by Paul T. Bruflat, Vice President, who has been authorized pursuant to the above resolution to execute power of attorneys on behalf of National Fire Insurance Company of Hartford.

This Power of Attorney is signed and sealed by facsimile under and by the authority of the following Resolution adopted by the Board of Directors of the Company by unanimous written consent dated the 25th day of April, 2012:

"Whereas, the bylaws of the Company or specific resolution of the Board of Directors has authorized various officers (the "Authorized Officers")to execute various policies, bonds, undertakings and other obligatory instruments of like nature; and

Whereas, from time to time, the signature of the Authorized Officers, in addition to being provided in original, hard copy format, may be provided via facsimile or otherwise in an electronic format (collectively, "Electronic Signatures"); Now therefore be it resolved: that the Electronic Signature of any Authorized Officer shall be valid and binding on the Company. "

ADOPTED BY THE BOARD OF DIRECTORS OF AMERICAN CASUALTY COMPANY OF READING, PENNSYLVANIA:

This Power of Attorney is made and executed pursuant to and by authority of the following resolution duly adopted by the Board of Directors of the Company by unanimous written consent dated May 10, 1995:

"RESOLVED: That any Senior or Group Vice President may authorize an officer to sign specific documents, agreements and instruments on behalf of the Company provided that the name of such authorized officer and a description of the documents, agreements or instruments that such officer may sign will be provided in writing by the Senior or Group Vice President to the Secretary of the Company prior to such execution becoming effective."

This Power of Attorney is signed by Paul T. Bruflat, Vice President, who has been authorized pursuant to the above resolution to execute power of attorneys on behalf of American Casualty Company of Reading, Pennsylvania.

This Power of Attorney is signed and sealed by facsimile under and by the authority of the following Resolution adopted by the Board of Directors of the Company by unanimous written consent dated the 25th day of April, 2012:

"Whereas, the bylaws of the Company or specific resolution of the Board of Directors has authorized various officers (the "Authorized Officers")to execute various policies, bonds, undertakings and other obligatory instruments of like nature; and

Whereas, from time to time, the signature of the Authorized Officers, in addition to being provided in original, hard copy format, may be provided via facsimile or otherwise in an electronic format (collectively, "Electronic Signatures"); Now therefore be it resolved: that the Electronic Signature of any Authorized Officer shall be valid and binding on the Company. "

CERTIFICATE OF LIABILITY INSURANCE

DATE (MM/DD/YYYY): 9/17/2021

THIS CERTIFICATE IS ISSUED AS A MATTER OF INFORMATION ONLY AND CONFERS NO RIGHTS UPON THE CERTIFICATE HOLDER. THIS CERTIFICATE DOES NOT AFFIRMATIVELY OR NEGATIVELY AMEND, EXTEND OR ALTER THE COVERAGE AFFORDED BY THE POLICIES BELOW. THIS CERTIFICATE OF INSURANCE DOES NOT CONSTITUTE A CONTRACT BETWEEN THE ISSUING INSURER(S), AUTHORIZED REPRESENTATIVE OR PRODUCER, AND THE CERTIFICATE HOLDER.

IMPORTANT: If the certificate holder is an ADDITIONAL INSURED, the policy(ies) must be endorsed. If SUBROGATION IS WAIVED, subject to the terms and conditions of the policy, certain policies may require an endorsement. A statement on this certificate does not confer rights to the certificate holder in lieu of such endorsement(s).

PRODUCER
The Horton Group
10320 Orland Parkway
Orland Park IL 60467

CONTACT NAME: Certificates Team
PHONE (A/C, No, Ext): 708-845-3917 FAX (A/C, No): 708-845-3001
E-MAIL ADDRESS: constructioncerts@thehortongroup.com

INSURER(S) AFFORDING COVERAGE	NAIC #
INSURER A : Berkley Assurance Company	39462
INSURER B : Arch Insurance Company	11150
INSURER C : The Travelers Property Casualty Insurance Company	25674
INSURER D : National Fire & Marine Insurance Company	20079
INSURER E :	
INSURER F :	

INSURED CURRA-3
Curran Contracting Company
286 Memorial Court
Crystal Lake IL 60014

COVERAGES **CERTIFICATE NUMBER:** 624368076 **REVISION NUMBER:**

THIS IS TO CERTIFY THAT THE POLICIES OF INSURANCE LISTED BELOW HAVE BEEN ISSUED TO THE INSURED NAMED ABOVE FOR THE POLICY PERIOD INDICATED. NOTWITHSTANDING ANY REQUIREMENT, TERM OR CONDITION OF ANY CONTRACT OR OTHER DOCUMENT WITH RESPECT TO WHICH THIS CERTIFICATE MAY BE ISSUED OR MAY PERTAIN, THE INSURANCE AFFORDED BY THE POLICIES DESCRIBED HEREIN IS SUBJECT TO ALL THE TERMS, EXCLUSIONS AND CONDITIONS OF SUCH POLICIES. LIMITS SHOWN MAY HAVE BEEN REDUCED BY PAID CLAIMS.

INSR LTR	TYPE OF INSURANCE	ADDL INSR	SUBR WVD	POLICY NUMBER	POLICY EFF (MM/DD/YYYY)	POLICY EXP (MM/DD/YYYY)	LIMITS	
B	GENERAL LIABILITY	Y	Y	41PKG89536	10/1/2020	10/1/2021	EACH OCCURRENCE	$ 5,000,000
	X COMMERCIAL GENERAL LIABILITY						DAMAGE TO RENTED PREMISES (Ea occurrence)	$ 1,000,000
	CLAIMS-MADE X OCCUR						MED EXP (Any one person)	$ 5,000
							PERSONAL & ADV INJURY	$ 5,000,000
							GENERAL AGGREGATE	$ 5,000,000
	GEN'L AGGREGATE LIMIT APPLIES PER:						PRODUCTS - COMP/OP AGG	$ 5,000,000
	POLICY X PRO-JECT X LOC							$
B	AUTOMOBILE LIABILITY	Y	Y	41PKG89536	10/1/2020	10/1/2021	COMBINED SINGLE LIMIT (Ea accident)	$ 5,000,000
	X ANY AUTO						BODILY INJURY (Per person)	$
	ALL OWNED AUTOS / SCHEDULED AUTOS						BODILY INJURY (Per accident)	$
	X HIRED AUTOS / X NON-OWNED AUTOS						PROPERTY DAMAGE (Per accident)	$
								$
D	UMBRELLA LIAB X OCCUR	Y	Y	42-UMO-308949-02	10/1/2020	10/1/2021	EACH OCCURRENCE	$ 5,000,000
	X EXCESS LIAB CLAIMS-MADE						AGGREGATE	$ 5,000,000
	DED X RETENTION $ 25,000							$
B	WORKERS COMPENSATION		Y	41WCI89534 - AOS	10/1/2020	10/1/2021	X WC STATU-TORY LIMITS / OTH-ER	
B	AND EMPLOYERS' LIABILITY Y/N			44WCI89535 - CA, DC, IL, IN, KY, MD, MN MO, OR, TX	10/1/2020	10/1/2021		
	ANY PROPRIETOR/PARTNER/EXECUTIVE OFFICER/MEMBER EXCLUDED? N	N / A					E.L. EACH ACCIDENT	$ 1,000,000
	(Mandatory in NH)						E.L. DISEASE - EA EMPLOYEE	$ 1,000,000
	If yes, describe under DESCRIPTION OF OPERATIONS below						E.L. DISEASE - POLICY LIMIT	$ 1,000,000
C	Leased & Rented Equipment			QT6600P879384	10/1/2020	10/1/2021	Limit	500,000
A	Pollution/Professional			PCAB-5012823-1020	10/1/2020	10/1/2021	Limit	5,000,000

DESCRIPTION OF OPERATIONS / LOCATIONS / VEHICLES (Attach ACORD 101, Additional Remarks Schedule, if more space is required)
The coverage and limits conform to the minimums required by Article 107.27 of the Standard Specifications for Road and Bridge Construction. Additional insured on a primary non contributory basis with respect to general liability and auto liability only when required by written contract. Waiver of subrogation in favor of the additional insureds will apply to general liability, auto liability and workers compensation where permitted by law and only when required by written contract. Excess follows form.

RE: DeKalb - IL Route 23 & Gurler Road Improvements, Section Number 20-00197-00-WR. 09-21-0038
Additional Insured(s):
City of DeKalb
See Attached...

CERTIFICATE HOLDER

City of DeKalb
1216 Market Street
DeKalb IL 60115

CANCELLATION

SHOULD ANY OF THE ABOVE DESCRIBED POLICIES BE CANCELLED BEFORE THE EXPIRATION DATE THEREOF, NOTICE WILL BE DELIVERED IN ACCORDANCE WITH THE POLICY PROVISIONS.

AUTHORIZED REPRESENTATIVE

© 1988-2010 ACORD CORPORATION. All rights reserved.

The ACORD name and logo are registered marks of ACORD

AGENCY CUSTOMER ID: CURRA-3

LOC #:

ADDITIONAL REMARKS SCHEDULE

AGENCY The Horton Group	NAMED INSURED Curran Contracting Company 286 Memorial Court Crystal Lake IL 60014
POLICY NUMBER	
CARRIER / NAIC CODE	EFFECTIVE DATE:

ADDITIONAL REMARKS

THIS ADDITIONAL REMARKS FORM IS A SCHEDULE TO ACORD FORM,

FORM NUMBER: 25 FORM TITLE: CERTIFICATE OF LIABILITY INSURANCE

DeKalb County Highway Department
Jacob & Hefner Associates, Inc.
Kimley-Horn Associates, Inc.

© 2008 ACORD CORPORATION. All rights reserved.

The ACORD name and logo are registered marks of ACORD

THIS ENDORSEMENT CHANGES THE POLICY. PLEASE READ IT CAREFULLY.

ADDITIONAL INSURED – OWNERS, LESSEES OR CONTRACTORS – SCHEDULED PERSON OR ORGANIZATION

This endorsement modifies insurance provided under the following:

COMMERCIAL GENERAL LIABILITY COVERAGE PART

SCHEDULE

Name Of Additional Insured Person(s) Or Organization(s)	Location(s) Of Covered Operations
All parties where required by a written contract except for any railroad	
Information required to complete this Schedule, if not shown above, will be shown in the Declarations.	

A. Section II – Who Is An Insured is amended to include as an additional insured the person(s) or organization(s) shown in the Schedule, but only with respect to liability for "bodily injury", "property damage" or "personal and advertising injury" caused, in whole or in part, by:

1. Your acts or omissions; or
2. The acts or omissions of those acting on your behalf;

in the performance of your ongoing operations for the additional insured(s) at the location(s) designated above.

However:

1. The insurance afforded to such additional insured only applies to the extent permitted by law; and
2. If coverage provided to the additional insured is required by a contract or agreement, the insurance afforded to such additional insured will not be broader than that which you are required by the contract or agreement to provide for such additional insured.

B. With respect to the insurance afforded to these additional insureds, the following additional exclusions apply:

This insurance does not apply to "bodily injury" or "property damage" occurring after:

1. All work, including materials, parts or equipment furnished in connection with such work, on the project (other than service, maintenance or repairs) to be performed by or on behalf of the additional insured(s) at the location of the covered operations has been completed; or
2. That portion of "your work" out of which the injury or damage arises has been put to its intended use by any person or organization other than another contractor or subcontractor engaged in performing operations for a principal as a part of the same project.

© Insurance Services Office, Inc., 2018

C. With respect to the insurance afforded to these additional insureds, the following is added to **Section III – Limits Of Insurance:**

If coverage provided to the additional insured is required by a contract or agreement, the most we will pay on behalf of the additional insured is the amount of insurance:

1. Required by the contract or agreement; or
2. Available under the applicable limits of insurance;

whichever is less.

This endorsement shall not increase the applicable limits of insurance.

© Insurance Services Office, Inc., 2018

THIS ENDORSEMENT CHANGES THE POLICY. PLEASE READ IT CAREFULLY.

ADDITIONAL INSURED – OWNERS, LESSEES OR CONTRACTORS – COMPLETED OPERATIONS

This endorsement modifies insurance provided under the following:

COMMERCIAL GENERAL LIABILITY COVERAGE PART
PRODUCTS/COMPLETED OPERATIONS LIABILITY COVERAGE PART

SCHEDULE

Name Of Additional Insured Person(s) Or Organization(s)	Location And Description Of Completed Operations
All parties where required by a written contract except for any railroad	
Information required to complete this Schedule, if not shown above, will be shown in the Declarations.	

A. **Section II – Who Is An Insured** is amended to include as an additional insured the person(s) or organization(s) shown in the Schedule, but only with respect to liability for "bodily injury" or "property damage" caused, in whole or in part, by "your work" at the location designated and described in the Schedule of this endorsement performed for that additional insured and included in the "products-completed operations hazard".

However:

1. The insurance afforded to such additional insured only applies to the extent permitted by law; and
2. If coverage provided to the additional insured is required by a contract or agreement, the insurance afforded to such additional insured will not be broader than that which you are required by the contract or agreement to provide for such additional insured.

B. With respect to the insurance afforded to these additional insureds, the following is added to **Section III – Limits Of Insurance:**

If coverage provided to the additional insured is required by a contract or agreement, the most we will pay on behalf of the additional insured is the amount of insurance:

1. Required by the contract or agreement; or
2. Available under the applicable limits of insurance;

whichever is less.

This endorsement shall not increase the applicable limits of insurance.

© Insurance Services Office, Inc., 2018

POLICY NUMBER: 41PKG89536

THIS ENDORSEMENT CHANGES THE POLICY. PLEASE READ IT CAREFULLY.

PRIMARY AND NONCONTRIBUTORY – OTHER INSURANCE CONDITION

This endorsement modifies insurance provided under the following:

COMMERCIAL GENERAL LIABILITY COVERAGE PART
PRODUCTS/COMPLETED OPERATIONS LIABILITY COVERAGE PART

The following is added to the **Other Insurance** Condition and supersedes any provision to the contrary:

Primary And Noncontributory Insurance

This insurance is primary to and will not seek contribution from any other insurance available to an additional insured under your policy provided that:

(1) The additional insured is a Named Insured under such other insurance; and

(2) You have agreed in writing in a contract or agreement that this insurance would be primary and would not seek contribution from any other insurance available to the additional insured.

© Insurance Services Office, Inc., 2012

WAIVER OF TRANSFER OF RIGHTS OF RECOVERY AGAINST OTHERS TO US

This endorsement modifies insurance provided under the following:

COMMERCIAL GENERAL LIABILITY COVERAGE PART
PRODUCTS/COMPLETED OPERATIONS LIABILITY COVERAGE PART

SCHEDULE

Name Of Person Or Organization:
All parties where required by written contract
Information required to complete this Schedule, if not shown above, will be shown in the Declarations.

The following is added to Paragraph **8. Transfer Of Rights Of Recovery Against Others To Us** of **Section IV – Conditions:**

We waive any right of recovery we may have against the person or organization shown in the Schedule above because of payments we make for injury or damage arising out of your ongoing operations or "your work" done under a contract with that person or organization and included in the "products-completed operations hazard". This waiver applies only to the person or organization shown in the Schedule above.

© Insurance Services Office, Inc., 2008

THIS ENDORSEMENT CHANGES THE POLICY. PLEASE READ IT CAREFULLY.

DESIGNATED CONSTRUCTION PROJECT(S) GENERAL AGGREGATE LIMIT

This endorsement modifies insurance provided under the following:

COMMERCIAL GENERAL LIABILITY COVERAGE PART

SCHEDULE

Designated Construction Project(s):
Applies to all construction projects of the insured unless otherwise excluded
Information required to complete this Schedule, if not shown above, will be shown in the Declarations.

A. For all sums which the insured becomes legally obligated to pay as damages caused by "occurrences" under Section **I** – Coverage **A**, and for all medical expenses caused by accidents under Section **I** – Coverage **C**, which can be attributed only to ongoing operations at a single designated construction project shown in the Schedule above:

1. A separate Designated Construction Project General Aggregate Limit applies to each designated construction project, and that limit is equal to the amount of the General Aggregate Limit shown in the Declarations.
2. The Designated Construction Project General Aggregate Limit is the most we will pay for the sum of all damages under Coverage **A**, except damages because of "bodily injury" or "property damage" included in the "products-completed operations hazard", and for medical expenses under Coverage **C** regardless of the number of:
   a. Insureds;
   b. Claims made or "suits" brought; or
   c. Persons or organizations making claims or bringing "suits".
3. Any payments made under Coverage **A** for damages or under Coverage **C** for medical expenses shall reduce the Designated Construction Project General Aggregate Limit for that designated construction project. Such payments shall not reduce the General Aggregate Limit shown in the Declarations nor shall they reduce any other Designated Construction Project General Aggregate Limit for any other designated construction project shown in the Schedule above.
4. The limits shown in the Declarations for Each Occurrence, Damage To Premises Rented To You and Medical Expense continue to apply. However, instead of being subject to the General Aggregate Limit shown in the Declarations, such limits will be subject to the applicable Designated Construction Project General Aggregate Limit.

© Insurance Services Office, Inc., 2008

B. For all sums which the insured becomes legally obligated to pay as damages caused by "occurrences" under Section **I** – Coverage **A,** and for all medical expenses caused by accidents under Section **I** – Coverage **C,** which cannot be attributed only to ongoing operations at a single designated construction project shown in the Schedule above:

1. Any payments made under Coverage **A** for damages or under Coverage **C** for medical expenses shall reduce the amount available under the General Aggregate Limit or the Products-completed Operations Aggregate Limit, whichever is applicable; and
2. Such payments shall not reduce any Designated Construction Project General Aggregate Limit.

C. When coverage for liability arising out of the "products-completed operations hazard" is provided, any payments for damages because of "bodily injury" or "property damage" included in the "products-completed operations hazard" will reduce the Products-completed Operations Aggregate Limit, and not reduce the General Aggregate Limit nor the Designated Construction Project General Aggregate Limit.

D. If the applicable designated construction project has been abandoned, delayed, or abandoned and then restarted, or if the authorized contracting parties deviate from plans, blueprints, designs, specifications or timetables, the project will still be deemed to be the same construction project.

E. The provisions of Section **III** – Limits Of Insurance not otherwise modified by this endorsement shall continue to apply as stipulated.

© Insurance Services Office, Inc., 2008

THIS ENDORSEMENT CHANGES THE POLICY. PLEASE READ IT CAREFULLY.

CONTRACTUAL LIABILITY – RAILROADS

This endorsement modifies insurance provided under the following:

COMMERCIAL GENERAL LIABILITY COVERAGE PART

SCHEDULE

Scheduled Railroad:	Designated Job Site:
Railroads where required by written contract	Locations where required by written contract

(If no entry appears above, information required to complete this endorsement will be shown in the Declarations as applicable to this endorsement.)

With respect to operations performed for, or affecting, a Scheduled Railroad at a Designated Job Site, the definition of "insured contract" in the Definitions section is replaced by the following:

9. "Insured Contract" means:

a. A contract for a lease of premises. However, that portion of the contract for a lease of premises that indemnifies any person or organization for damage by fire to premises while rented to you or temporarily occupied by you with permission of the owner is not an "insured contract";

b. A sidetrack agreement;

c. Any easement or license agreement;

d. An obligation, as required by ordinance, to indemnify a municipality, except in connection with work for a municipality;

e. An elevator maintenance agreement;

f. That part of any other contract or agreement pertaining to your business (including an indemnification of a municipality in connection with work performed for a municipality) under which you assume the tort liability of another party to pay for "bodily injury" or "property damage" to a third person or organization. Tort liability means a liability that would be imposed by law in the absence of any contract or agreement.

Paragraph **f.** does not include that part of any contract or agreement:

(1) That indemnifies an architect, engineer or surveyor for injury or damage arising out of:

(a) Preparing, approving or failing to prepare or approve maps, shop drawings, opinions, reports, surveys, field orders, change orders or drawings and specifications; or

(b) Giving directions or instructions, or failing to give them, if that is the primary cause of the injury or damage;

(2) Under which the insured, if an architect, engineer or surveyor, assumes liability for an injury or damage arising out of the insured's rendering or failure to render professional services, including those listed in Paragraph **(1)** above and supervisory, inspection, architectural or engineering activities.

© ISO Properties, Inc., 2000

THIS ENDORSEMENT CHANGES THE POLICY. PLEASE READ IT CAREFULLY.

ADDITIONAL INSURED ONGOING OPERATIONS, OTHER INSURANCE, AND DUTY TO DEFEND AMENDMENT – SCHEDULED RAILROAD

This endorsement modifies insurance provided under the following:

COMMERCIAL GENERAL LIABILITY COVERAGE PART

SCHEDULE

Scheduled Railroad:	**Designated Job Site:**
ALL RAILROADS WHERE REQUIRED BY A WRITTEN CONTRACT EXCEPT RAILROADS INCLUDED UNDER A SEPARATE ADDITIONAL INSURED ENDORSEMENT ISSUED TO A SPECIFIC ENTITY.	ANY LOCATION AS PER WRITTEN CONTRACT

A. **Section II – Who Is An Insured** is amended to include as an additional insured the Scheduled Railroad shown in the Schedule above, but only with respect to liability for "bodily injury", "property damage" or "personal and advertising injury" caused, in whole or in part, by:

1. Your acts or omissions; or
2. The acts or omissions of those acting on your behalf;

in the performance of your ongoing operations for the additional insured(s) at the Designated Job Site shown in the Schedule above.

However:

1. The insurance afforded to such additional insured only applies to the extent permitted by law; and
2. If coverage provided to the additional insured is required by a contract or agreement, the insurance afforded to such additional insured will not be broader than that which you are required by the contract or agreement to provide for such additional insured.

B. With respect to the insurance afforded to this additional insured, the following additional exclusions apply:

1. This insurance does not apply to "bodily injury" or "property damage" occurring after:
   - **a.** All work, including materials, parts or equipment furnished in connection with such work, on the project (other than service, maintenance or repairs) to be performed by or on behalf of the additional insured(s) at the location of the covered operations has been completed; or
   - b. That portion of "your work" out of which the injury or damage arises has been put to its intended use by any person or organization other than another contractor or subcontractor engaged in performing operations for a principal as a part of the same project.

C. With respect to the insurance afforded to this additional insured, the following is added to **Section III – Limits Of Insurance:**

Includes copyright material of Insurance Services Office, Inc with its permission

If coverage provided to the additional insured is required by a contract or agreement, the most we will pay on behalf of the additional insured is the amount of insurance:

1. Required by the contract or agreement; or
2. Available under the applicable Limits of Insurance shown in the Declarations;

whichever is less.

This endorsement shall not increase the applicable Limits of Insurance shown in the Declarations.

D. This insurance does not apply to "bodily injury", "property damage' or "personal and advertising injury" arising out of the rendering of or failure to render any professional services by you or any engineer, architect, or surveyor who is either employed by you or performing work on your behalf in such capacity.

Professional services include:

a. The preparing, approving or failing to prepare or approve maps, shop drawings, opinions, reports, surveys, field orders, change orders or drawings and specifications; and

b. Supervisory, inspection, architectural or engineering activities.

This exclusion applies even if the claims against any insured allege negligence or other wrongdoing in the supervision, hiring, employment, training or monitoring of others by that insured. If the "occurrence" which caused the 'bodily injury" or "property damage" or the offense which caused the "personal and advertising injury", involved the rendering of or failure to render any professional services by you or any engineer, architect or surveyor who is either employed by you or performing work on your behalf in such capacity.

E. With respect to insurance afforded to this additional insured, the following is added to **b. (1) (a)** of Paragraph **4. Other Insurance** of **Section IV – Commercial General Liability Conditions**:

This insurance is excess over any other insurance, whether primary, excess, contingent or on any other basis that is available to the additional insured shown in the Schedule above. However,

1. This insurance is primary to and will not seek contribution from any other insurance available to an additional insured, other than a Railroad Protective Liability policy, under your policy provided that:
   (a) The additional insured is a Named Insured under such other insurance; and
   (b) You have agreed in writing in a contract or agreement prior to the "occurrence" or "offense" that this insurance would be primary and would not seek contribution from any other insurance available to the additional insured; or

2. If the other insurance is a Railroad Protective Liability policy, this insurance is excess unless there is a written denial of coverage issued under that Railroad Protective Liability Policy.

F. With respect to insurance afforded to this additional insured, the following is added to Paragraph **2. Duties In the Event of Occurrence, Offense, Claim or Suit** of **Section IV – Commercial General Liability Conditions:**

Any additional insured shown in the Schedule above will:

1. Immediately record the specifics of the claim or "suit" and the date received; notify us, and see to it that we receive written notice of the claim or "suit" as soon as practicable; and
2. Notify us of other insurance available to the additional insured

Includes copyright material of Insurance Services Office, Inc with its permission

All other terms and conditions of this Policy remain unchanged.

Issued By: ARCH INSURANCE COMPANY

Endorsement Number:

Policy Number: 41PKG89536

Named Insured: CURRAN GROUP, INC.

Endorsement Effective Date: 10/1/2021

President

Includes copyright material of Insurance Services Office, Inc with its permission

THIS ENDORSEMENT CHANGES THE POLICY. PLEASE READ IT CAREFULLY.

ADDITIONAL INSURED COMPLETED OPERATIONS, OTHER INSURANCE, AND DUTY TO DEFEND AMENDMENT – SCHEDULED RAILROAD

This endorsement modifies insurance provided under the following:

COMMERCIAL GENERAL LIABILITY COVERAGE PART

SCHEDULE

Scheduled Railroad:	**Designated Job Site:**
ALL RAILROADS WHERE REQUIRED BY A WRITTEN CONTRACT EXCEPT RAILROADS INCLUDED UNDER A SEPARATE ADDITIONAL INSURED ENDORSEMENT ISSUED TO A SPECIFIC ENTITY.	ANY LOCATION PER WRITTEN CONTRACT.

A. **Section II – Who Is An Insured** is amended to include as an additional insured Scheduled Railroad shown in the Schedule above, but only with respect to liability for "bodily injury" or "property damage" caused, in whole or in part, by "your work" at the Designated Job Site described in the Schedule above performed for that additional insured and included in the "products-completed operations hazard".

However:

1. The insurance afforded to such additional insured only applies to the extent permitted by law; and
2. If coverage provided to the additional insured is required by a contract or agreement, the insurance afforded to such additional insured will not be broader than that which you are required by the contract or agreement to provide for such additional insured.

B. With respect to the insurance afforded to this additional insured, the following is added to **Section III – Limits Of Insurance:**

If coverage provided to the additional insured is required by a contract or agreement, the most we will pay on behalf of the additional insured is the amount of insurance:

1. Required by the contract or agreement; or
2. Available under the applicable Limits of Insurance shown in the Declarations;

whichever is less.

This endorsement shall not increase the applicable Limits of Insurance shown in the Declarations.

C. This insurance does not apply to "bodily injury", "property damage' or "personal and advertising injury" arising out of the rendering of or failure to render any professional services by you or any engineer, architect, or surveyor who is either employed by you or performing work on your behalf in such capacity.

Professional services include:

a. The preparing, approving or failing to prepare or approve maps, shop drawings, opinions, reports, surveys, field orders, change orders or drawings and specifications; and

b. Supervisory, inspection, architectural or engineering activities.

Includes copyright material of Insurance Services Office, Inc with its permission

This exclusion applies even if the claims against any insured allege negligence or other wrongdoing in the supervision, hiring, employment, training or monitoring of others by that insured. If the "occurrence" which caused the 'bodily injury" or "property damage" or the offense which caused the "personal and advertising injury", involved the rendering of or failure to render any professional services by you or any engineer, architect or surveyor who is either employed by you or performing work on your behalf in such capacity.

D. With respect to insurance afforded to this additional insured, the following is added to **b. (1) (a)** of Paragraph **4. Other Insurance** of **Section IV – Commercial General Liability Conditions**:

This insurance is excess over any other insurance, whether primary, excess, contingent or on any other basis that is available to the additional insured shown in the Schedule above. However,

1. This insurance is primary to and will not seek contribution from any other insurance available to an additional insured, other than a Railroad Protective Liability policy, under your policy provided that:
   (a) The additional insured is a Named Insured under such other insurance; and
   (b) You have agreed in writing in a contract or agreement prior to the "occurrence" or "offense" that this insurance would be primary and would not seek contribution from any other insurance available to the additional insured; or

2. If the other insurance is a Railroad Protective Liability policy, this insurance is excess unless there is a written denial of coverage issued under that Railroad Protective Liability Policy.

E. With respect to insurance afforded to this additional insured, the following is added to Paragraph **2. Duties In the Event of Occurrence, Offense, Claim or Suit** of **Section IV – Commercial General Liability Conditions:**

Any additional insured shown in the Schedule above will:

1. Immediately record the specifics of the claim or "suit" and the date received; notify us, and see to it that we receive written notice of the claim or "suit" as soon as practicable; and
2. Notify us of other insurance available to the additional insured

All other terms and conditions of this Policy remain unchanged.

Issued By: ARCH INSURANCE COMPANY

Endorsement Number:

Policy Number: 41PKG89536

Named Insured: CURRAN GROUP, INC.

Endorsement Effective Date: 10/1/2021

President

Includes copyright material of Insurance Services Office, Inc with its permission

THIS ENDORSEMENT CHANGES THE POLICY. PLEASE READ IT CAREFULLY.

ADDITIONAL INSURED - BLANKET

This endorsement modifies insurance provided under the following:

AUTO DEALERS COVERAGE FORM
BUSINESS AUTO COVERAGE FORM
MOTOR CARRIER COVERAGE FORM

Under **Covered Autos Liability Coverage**, the **Who is An Insured** provision is amended to include as an "insured" the person or organization who is required under a written contract to be included as an "insured" under this policy, but only with respect to their legal liability for your acts or omissions or the act or omissions of a person for whom **Covered Autos Liability Coverage** is afforded under this policy.

All other terms and conditions of this policy remain unchanged.

Endorsement Number:

Policy Number: 41PKG89536

Named Insured:

This endorsement is effective on the inception date of this Policy unless otherwise stated herein:

Endorsement Effective Date: 10/01/2021

THIS ENDORSEMENT CHANGES THE POLICY. PLEASE READ IT CAREFULLY.

PRIMARY AND NONCONTRIBUTORY – OTHER INSURANCE CONDITION

This endorsement modifies insurance provided under the following:

AUTO DEALERS COVERAGE FORM
BUSINESS AUTO COVERAGE FORM
MOTOR CARRIER COVERAGE FORM

With respect to coverage provided by this endorsement, the provisions of the Coverage Form apply unless modified by the endorsement.

A. The following is added to the **Other Insurance** Condition in the Business Auto Coverage Form and the **Other Insurance – Primary And Excess Insurance Provisions** in the Motor Carrier Coverage Form and supersedes any provision to the contrary:

This Coverage Form's Covered Autos Liability Coverage is primary to and will not seek contribution from any other insurance available to an "insured" under your policy provided that:

1. Such "insured" is a Named Insured under such other insurance; and
2. You have agreed in writing in a contract or agreement that this insurance would be primary and would not seek contribution from any other insurance available to such "insured".

B. The following is added to the **Other Insurance** Condition in the Auto Dealers Coverage Form and supersedes any provision to the contrary:

This Coverage Form's Covered Autos Liability Coverage and General Liability Coverages are primary to and will not seek contribution from any other insurance available to an "insured" under your policy provided that:

1. Such "insured" is a Named Insured under such other insurance; and
2. You have agreed in writing in a contract or agreement that this insurance would be primary and would not seek contribution from any other insurance available to such "insured".

 © Insurance Services Office, Inc., 2016

THIS ENDORSEMENT CHANGES THE POLICY. PLEASE READ IT CAREFULLY.

WAIVER OF TRANSFER OF RIGHTS OF RECOVERY AGAINST OTHERS TO US (WAIVER OF SUBROGATION)

This endorsement modifies insurance provided under the following:

BUSINESS AUTO COVERAGE FORM
BUSINESS AUTO PHYSICAL DAMAGE COVERAGE FORM
GARAGE COVERAGE FORM
MOTOR CARRIER COVERAGE FORM
TRUCKERS COVERAGE FORM

With respect to coverage provided by this endorsement, the provisions of the Coverage Form apply unless modified by the endorsement.

This endorsement changes the policy effective on the inception date of the policy unless another date is indicated below.

Named Insured:
Endorsement Effective Date: 10/01/2021

SCHEDULE

Name(s) Of Person(s) Or Organization(s):
Any person or organization where waiver of our right to recover is permitted by law and is required by written contract provided such contract was executed prior to the loss
Information required to complete this Schedule, if not shown above, will be shown in the Declarations.

The **Transfer Of Rights Of Recovery Against Others To Us** Condition does not apply to the person(s) or organization(s) shown in the Schedule, but only to the extent that subrogation is waived prior to the "accident" or the "loss" under a contract with that person or organization.

© Insurance Services Office, Inc., 2009

WAIVER OF OUR RIGHT TO RECOVER FROM OTHERS ENDORSEMENT

We have the right to recover our payments from anyone liable for an injury covered by this policy. We will not enforce our right against the person or organization named in the Schedule. (This agreement applies only to the extent that you perform work under a written contract that requires you to obtain this agreement from us.)

This agreement shall not operate directly or indirectly to benefit anyone not named in the Schedule.

Schedule

Any person or organization where waiver of our right to recover is permitted by law and is required by written contract provided such contract was executed prior to the loss

This endorsement changes the policy to which it is attached and is effective on the date issued unless otherwise stated.

(The information below is required only when this endorsement is issued subsequent to preparation of the policy.)

Endorsement Effective Policy No. 41WCI89534 Endorsement No.
Insured Premium

Insurance Company: Countersigned by_____

© 1983 National Council on Compensation Insurance.

WAIVER OF OUR RIGHT TO RECOVER FROM OTHERS ENDORSEMENT

We have the right to recover our payments from anyone liable for an injury covered by this policy. We will not enforce our right against the person or organization named in the Schedule. (This agreement applies only to the extent that you perform work under a written contract that requires you to obtain this agreement from us.)

This agreement shall not operate directly or indirectly to benefit anyone not named in the Schedule.

Schedule

ANY PERSON OR ORGANIZATION WHERE WAIVER OF OUR RIGHT TO RECOVER IS PERMITTED BY LAW AND IS REQUIRED BY WRITTEN CONTRACT PROVIDED SUCH CONTRACT WAS EXECUTED PRIOR TO DATE OF LOSS

This endorsement changes the policy to which it is attached and is effective on the date issued unless otherwise stated.
(The information below is required only when this endorsement is issued subsequent to preparation of the policy.)

Endorsement Effective 10/01/2021 Policy No. 44WCI89535 Endorsement No.
Insured Premium INCL.
Insurance Company

Countersigned By _____

DATE OF ISSUE: 10-01-21

© 1983 National Council on Compensation Insurance.

THIS ENDORSEMENT CHANGES THE POLICY. PLEASE READ IT CAREFULLY.

EXCLUSION - DESIGNATED OPERATIONS COVERED BY A CONSOLIDATED (WRAP-UP) INSURANCE PROGRAM

This endorsement modifies insurance provided under the following:

COMMERCIAL GENERAL LIABILITY COVERAGE PART

SCHEDULE

Description and Location of Operation(s):

ALL PROJECTS AND LOCATIONS WHERE THE INSURED IS PERFORMING WORK THAT IS SUBJECT TO A CONSOLIDATED (WRAP-UP) INSURANCE PROGRAM WHETHER PROVIDED BY THE OWNER, PRIME CONTRACTOR OR PROJECT MANAGER

(If no entry appears above, information required to complete this endorsement will be shown in the Declarations as applicable to this endorsement.)

The following exclusion is added to paragraph **2.**, Exclusions of COVERAGE A - BODILY INJURY AND PROPERTY DAMAGE LIABILITY (Section I - Coverages):

This insurance does not apply to "bodily injury" or "property damage" arising out of either your ongoing operations or operations included within the "products-completed operations hazard" at the location described in the Schedule of this endorsement, as a consolidated (wrap-up) insurance program has been provided by the prime contractor/project manager or owner of the construction project in which you are involved.

This exclusion applies whether or not the consolidated (wrap-up) insurance program:

(1) Provides coverage identical to that provided by this Coverage Part;

(2) Has limits adequate to cover all claims; or

(3) Remains in effect.

Copyright, Insurance Services Office, Inc., 1994

POLICY NUMBER: 41WCI89534

DESIGNATED WORKPLACES EXCLUSION ENDORSEMENT

The policy does not cover work conducted at or from

Any employee engaged in any work directly connected with operations conducted at (or "in") any job site where the Named Insured is covered for Workers' Compensation insurance under a separate Wrap-Up Insurance program.

Wording not applicable to Wisconsin, where coverage is limited to wrap-ups reported by the Wisconsin Compensation Rating Bureau.

This endorsement changes the policy to which it is attached and is effective on the date issued unless otherwise stated.
(The information below is required only when this endorsement is issued subsequent to preparation of the policy.)

Endorsement Effective 10-01-21 Policy No. 41WCI89534 Endorsement No.

Insured CURRAN GROUP, INC. Premium $ INCL.

Insurance Company ARCH INSURANCE COMPANY

Countersigned By _____

DATE OF ISSUE: 10-01-21

© 1983 National Council on Compensation Insurance.

ADDENDUM NUMBER 1
IL Route 23 and Gurler Road – Section No. 20-00197-00-WR
08/26/21

This addendum clarifies, modifies, amplifies, amends, and extends the requirements of the Contract Documents for the above referenced project and it shall be incorporated into the bid. **Acknowledge receipt of this addendum by returning signed addendum with bid.** Failure to acknowledge receipt of this addendum may subject Bidder to disqualification.

FORMAL CONTRACT PROPOSAL – BLR 12200

1. Note 5 on page 3 of the Formal Contract Proposal is hereby amended.

PLANS FOR PROPOSED INTERSECTION IMPROVEMENT AND TRAFFIC SIGNAL INSTALLATION

1. Note 5 on Sheet 4 of the Plans is hereby revised.

MATERIAL ACQUISITION CORRESPONDENCE

1. The correspondence and graphic from Bob Shannon (Krusinski Construction Company) is hereby included in the bid documents.

The undersigned authorized signatory hereby acknowledges ADDENDUM NUMBER 1.

Kim Bolanowski
Signature

Kim Bolanowski
Printed Name

Estimating Coordinator
Title

Illinois Department of Transportation

Local Public Agency Formal Contract Proposal

COVER SHEET

Proposal Submitted By:

Contractor's Name			
Curran Contracting Company			
Contractor's Address	**City**	**State**	**Zip Code**
286 Memorial Court	Crystal Lake	IL	60014

STATE OF ILLINOIS

Local Public Agency	County	Section Number
City of DeKalb	DeKalb	20-00197-00-WR

Route(s) (Street/Road Name)	Type of Funds
IL Route 23 and Gurler Road	EDP and Local

☐ Proposal Only ☐ Proposal and Plans ☒ Proposal only, plans are separate

Submitted/Approved
For Local Public Agency:

For a County and Road District Project

Submitted/Approved

Highway Commissioner Signature	Date

Submitted/Approved

County Engineer/Superintendent of Highways	Date

For a Municipal Project

Submitted/Approved/Passed

Signature	Date
[signature]	8-13-21

Official Title: City Engineer

Department of Transportation

Released for bid based on limited review

Regional Engineer Signature	Date
[signature]	8/18/2021

Note: All proposal documents, including Proposal Guaranty Checks or Proposal Bid Bonds, should be stapled together to prevent loss when bids are processed.

Local Public Agency	County	Section Number	Route(s) (Street/Road Name)
City of DeKalb	DeKalb	20-00197-00-WR	IL Route 23 and Gurler Road

NOTICE TO BIDDERS

Sealed proposals for the project described below will be received at the office of City of DeKalb Public Works (Name of Office)

1216 Market Street (Address) until 2:00 PM (Time) on 08/30/21 (Date).

Sealed proposals will be opened and read publicly at the office of City of DeKalb Public Works (Name of Office)

1216 Market Street (Address) at 2:00 PM (Time) on 08/30/21 (Date).

DESCRIPTION OF WORK

Location	Project Length
Intersection of IL-23 and Gurler Road, DeKalb, IL 60115	±0.51 miles

Proposed Improvement

Roadway improvements on +/- 0.33 miles of IL Route 23 and +/- 0.18 miles of Gurler Road to support a commercial/industrial facility with all associated pacement, utilities, stormwater management and erosion control & stabilization measures.

1. Plans and proposal forms will be available in the office of

City of DeKalb Public Works - 1216 Market Street, DeKalb, Illinois 60115

Contractors may obtain copies of the Bidding Documents from Cross Rhodes Repro via their online portal: https://www.x-rhodesplanroom.com/jobs/public
Contractor is responsible for the cost of making copies. Payments shall be made to Cross Rhodes Repro.

2. ☒ Prequalification
   If checked, the 2 apparent as read low bidders must file within 24 hours after the letting an "Affidavit of Availability" (Form BC 57) in triplicate, showing all uncompleted contracts awarded to them and all low bids pending award for Federal, State, County, Municipal and private work. One original shall be filed with the Awarding Authority and two originals with the IDOT District Office.
3. The Awarding Authority reserves the right to waive technicalities and to reject any or all proposals as provided in BLRS Special Provision for Bidding Requirements and Conditions for Contract Proposals.
4. The following BLR Forms shall be returned by the bidder to the Awarding Authority:
   a. Local Public Agency Formal Contract Proposal (BLR 12200)
   b. Schedule of Prices (BLR 12201)
   c. Proposal Bid Bond (BLR 12230) (if applicable)
   d. Apprenticeship or Training Program Certification (BLR 12325) (do not use for project with Federal funds.)
   e. Affidavit of Illinois Business Office (BLR 12326) (do not use for project with Federal funds)
5. The quantities appearing in the bid schedule are approximate and are prepared for the comparison of bids. Payment to the Contractor will be made only for the actual quantities of work performed and accepted or materials furnished according to the contract. The scheduled quantities of work to be done and materials to be furnished may be increased, decreased or omitted as hereinafter provided.
6. Submission of a bid shall be conclusive assurance and warranty the bidder has examined the plans and understands all requirements for the performance of work. The bidder will be responsible for all errors in the proposal resulting from failure or neglect to conduct an in depth examination. The Awarding Authority will, in no case, be responsible for any costs, expenses, losses or changes in anticipated profits resulting from such failure or neglect of the bidder.
7. The bidder shall take no advantage of any error or omission in the proposal and advertised contract.
8. If a special envelope is supplied by the Awarding Authority, each proposal should be submitted in that envelope furnished by the Awarding Agency and the blank spaces on the envelope shall be filled in correctly to clearly indicate its contents. When an envelope other than the special one furnished by the Awarding Authority is used, it shall be marked to clearly indicate its contents. When sent by mail, the sealed proposal shall be addressed to the Awarding Authority at the address and in care of the official in whose office the bids are to be received. All proposals shall be filed prior to the time and at the place specified in the Notice to Bidders. Proposals received after the time specified will be returned to the bidder unopened.
9. Permission will be given to a bidder to withdraw a proposal if the bidder makes the request in writing or in person before the time for

opening proposals.

Local Public Agency	County	Section Number	Route(s) (Street/Road Name)
City of DeKalb	DeKalb	20-00197-00-WR	IL Route 23 and Gurler Road

PROPOSAL

1. Proposal of Curran Contracting Company
Contractor's Name
286 Memorial Court, Crystal Lake, IL 60014
Contractor's Address

2. The plans for the proposed work are those prepared by Jacob and Hefner Associates, inc. & Kimley-Horn Associates Inc. and approved by the Department of Transportation on _____.

3. The specifications referred to herein are those prepared by the Department of Transportation and designated as "Standard Specifications for Road and Bridge Construction" and the " Supplemental Specifications and Recurring Special Provisions" thereto, adopted and in effect on the date of invitation for bids.

4. The undersigned agrees to accept, as part of the contract, the applicable Special Provisions indicated on the "Check Sheet for Recurring Special Provisions" contained in this proposal.

*5. The undersigned agrees to complete the work within _____ working days or by 11/30/21 unless additional time is granted in accordance with the specifications.

6. The successful bidder at the time of execution of the contract will be required to deposit a contract bond for the full amount of the award. When a contract bond is not required, the proposal guaranty check will be held in lieu thereof. If this proposal is accepted and the undersigned fails to execute a contract and contract bond as required, it is hereby agreed that the Bid Bond of check shall be forfeited to the Awarding Authority.

7. Each pay item should have a unit price and a total price. If no total price is shown or if there is a discrepancy between the products of the unit price multiplied by the quantity, the unit price shall govern. If a unit price is omitted, the total price will be divided by the quantity in order to establish a unit price. A bid may be declared unacceptable if neither a unit price nor a total price is shown.

8. The undersigned submits herewith the schedule of prices on BLR 12201 covering the work to be performed under this contract.

9. The undersigned further agrees that if awarded the contract for the sections contained in the combinations on BLR 12201, the work shall be in accordance with the requirements of each individual proposal for the multiple bid specified in the Schedule for Multiple Bids below.

10. A proposal guaranty in the proper amount, as specified in BLRS Special Provision for Bidding Requirements and Conditions for Contract Proposals, will be required. Bid Bonds will be allowed as a proposal guaranty. Accompanying this proposal is either a bid bond, if allowed, on Department form BLR 12230 or a proposal guaranty check, complying with the specifications, made payable to: _____ Treasurer of The City of DeKalb.
The amount of the check is _____ (_____).

***Some work shall be exempted from the completion date, and shall instead be completed no later than April 15, 2022. Such exempted work shall include earthwork and drainage improvements outside of the roadbed and its supporting sub-grade, and final signalization. Other reasonable schedule adjustments may be requested of the Owner, allowed at their sole discretion, during the project as conditions present themselves.**

Attach Cashier's Check or Certified Check Here

In the event that one proposal guaranty check is intended to cover two or more bid proposals, the amount must be equal to the sum of the proposal guaranties which would be required for each individual bid proposal. If the proposal guaranty check is placed in another bid proposal, state below where it may be found.

The proposal guaranty check will be found in the bid proposal for: Section Number _____.

SUMMARY OF QUANTITIES - CIVIL COSTS

PAY CODE	DESCRIPTION	UNITS	EDP REIMBURSABLE	EDP & LA REIMBURSABLE	TOTAL QUANTITY
78300200	RAISED REFLECTIVE PAVEMENT MARKER REMOVAL	EACH	35	0	35
78300201	PAVEMENT MARKING REMOVAL - GRINDING	SQ FT	1,303	0	1,303
78300202	PAVEMENT MARKING REMOVAL - WATER BLASTING	SQ FT	483	0	483
X0322808	*REMOVE EXISTING FLARED END SECTION	EACH	16	8	24
X0325806	*WASHOUT BASIN	LSUM	2/3	1/3	1
X0327301	*RELOCATE EXISTING MAILBOX	EACH	9	3	12
X0327356	*TEMPORARY AGGREGATE WEDGE	TON	13	0	13
	*CONCRETE COLLARS	EACH	4	0	4
X1700063	*CONCRETE HEADWALL (SPECIAL)	EACH	2	0	2
X2200020	*FENCE REMOVAL AND REINSTALLATION	FOOT	0	130	130
X2700017	*GROOVED THERMOPLASTIC PAVEMENT MARKING - 4"	FOOT	10,332	4,506	14,838
X2700018	*GROOVED THERMOPLASTIC PAVEMENT MARKING - 8"	FOOT	253	0	253
	*GROOVED THERMOPLASTIC PAVEMENT MARKING - 8"	FOOT	920	538	1,458
X4810200	*AGGREGATE SHOULDER REMOVAL	CU YD	548	472	1,019
X7010216	*TRAFFIC CONTROL AND PROTECTION, (SPECIAL)	LSUM	2/3	1/3	1
X7030005	*TEMPORARY PAVEMENT MARKING REMOVAL	SQ FT	4,220	1,389	5,609
Z0019500	*DRYWELL	EACH	0	1	1
Z0029602	*TEMPORARY SIGNING	EACH	10	10	20
Z0030850	*TEMPORARY INFORMATION SIGNING	SQ FT	42	42	84
Z0033700	*LONGITUDINAL JOINT SEALANT	FOOT	6,870	2,525	9,395
	*24" HDPE H-12 PIPE	FOOT	0	385	385
	*REESTABLISH EXISTING BENCHMARK	EACH	1	0	1
	*FENCE POST REMOVAL	EACH	1	0	1

SUMMARY OF QUANTITIES - SIGNAL COSTS

PAY CODE	DESCRIPTION	UNITS	EDP REIMBURSABLE	EDP & LA REIMBURSABLE	TOTAL QUANTITY
70106800	CHANGEABLE MESSAGE SIGN	CAL MO	1	0	1
72000100	SIGN PANEL - TYPE 1	SQ FT	73	0	73
80500010	SERVICE INSTALLATION - GROUND MOUNTED	EACH	1	0	1
81028170	UNDERGROUND CONDUIT, GALVANIZED STEEL, 1 1/4" DIA.	FOOT	12	0	12
81028240	UNDERGROUND CONDUIT, GALVANIZED STEEL, 4" DIA.	FOOT	307	0	307
81028340	UNDERGROUND CONDUIT, PVC, 1 1/2" DIA.	FOOT	735	0	735
81028350	UNDERGROUND CONDUIT, PVC, 2" DIA.	FOOT	29	0	29
81028370	UNDERGROUND CONDUIT, PVC, 3" DIA.	FOOT	150	0	150
81028390	UNDERGROUND CONDUIT, PVC, 4" DIA.	FOOT	4	0	4
81400700	HANDHOLE, PORTLAND CEMENT CONCRETE	EACH	4	0	4
81400720	DOUBLE HANDHOLE, PORTLAND CEMENT CONCRETE	EACH	1	0	1
81702110	ELECTRIC CABLE IN CONDUIT, 600V (XLP-TYPE USE) 1/C NO. 10	FOOT	2700	0	2700
81702450	ELECTRIC CABLE IN CONDUIT, 600V (XLP-TYPE USE) 3-1/C NO. 10	FOOT	889.5	0	889.5
82102250	LUMINAIRE, LED, ROADWAY, OUTPUT DESIGNATION G	EACH	4	0	4
88200101	UNINTERRUPTABLE POWER SUPPLY	EACH	1	0	1
87301225	ELECTRIC CABLE IN CONDUIT, SIGNAL NO. 14 3C	FOOT	603	0	603
87301245	ELECTRIC CABLE IN CONDUIT, SIGNAL NO. 14 5C	FOOT	1947.5	0	1947.5
87301255	ELECTRIC CABLE IN CONDUIT, SIGNAL NO. 14 7C	FOOT	2440.5	0	2440.5
87301805	ELECTRIC CABLE IN CONDUIT, SERVICE, NO. 6 2 C	FOOT	57	0	57
87301900	ELECTRIC CABLE IN CONDUIT, EQUIPMENT GROUNDING CONDUCTOR, NO. 6 1C	FOOT	501.5	0	501.5
87502500	TRAFFIC SIGNAL POST, GALVANIZED STEEL 16 FT.	EACH	4	0	4
87702950	STEEL COMBINATION MAST ARM ASSEMBLY AND POLE 44 FT.	EACH	1	0	1
87702970	STEEL COMBINATION MAST ARM ASSEMBLY AND POLE 48 FT.	EACH	1	0	1
87702980	STEEL COMBINATION MAST ARM ASSEMBLY AND POLE 50 FT.	EACH	1	0	1
87702985	STEEL COMBINATION MAST ARM ASSEMBLY AND POLE 52 FT.	EACH	1	0	1
87800100	CONCRETE FOUNDATION, TYPE A	FOOT	12	0	12

SUMMARY OF QUANTITIES - SIGNAL COSTS

PAY CODE	DESCRIPTION	UNITS	EDP REIMBURSABLE	EDP & LA REIMBURSABLE	TOTAL QUANTITY
87800150	CONCRETE FOUNDATION, TYPE C	FOOT	3	0	3
87800415	CONCRETE FOUNDATION, TYPE E 36-INCH DIAMETER	FOOT	56	0	56
88040020	SIGNAL HEAD, POLYCARBONATE, LED, 1-FACE, 1-SECTION, BRACKET MOUNTED	EACH	1	0	1
88040070	SIGNAL HEAD, POLYCARBONATE, LED, 1-FACE, 3-SECTION, BRACKET MOUNTED	EACH	2	0	2
88040090	SIGNAL HEAD, POLYCARBONATE, LED, 1-FACE, 3-SECTION, MAST ARM MOUNTED	EACH	5	0	5
88040150	SIGNAL HEAD, POLYCARBONATE, LED, 1-FACE, 5-SECTION, BRACKET MOUNTED	EACH	5	0	5
88040160	SIGNAL HEAD, POLYCARBONATE, LED, 1-FACE, 5-SECTION, MAST ARM MOUNTED	EACH	5	0	5
88200410	TRAFFIC SIGNAL BACKPLATE, LOUVERED, FORMED PLASTIC	EACH	17	0	17
88700090	CONFIRMATION BEACON	EACH	2	0	2
88700200	LIGHT DETECTOR	EACH	2	0	2
88700300	LIGHT DETECTOR AMPLIFIER	EACH	1	0	1
X1400215	REMOTE-CONTROLLED VIDEO SYSTEM	EACH	1	0	1
X8250081	COMBINATION LIGHTING CONTROLLER	EACH	1	0	1
X0324085	EMERGENCY VEHICLE PRIORITY SYSTEM LINE SENSOR CABLE, NO. 20 3/C	FOOT	619	0	619
X8570226	FULL-ACTUATED CONTROLLER AND TYPE IV CABINET, SPECIAL	EACH	1	0	1
Z0033072	VIDEO VEHICLE DETECTION SYSTEM	EACH	1	0	1
X0325839	PERMANENT TRAFFIC SIGNAL TIMING	EACH	1	0	1

NOTES:

1. QUANTITIES SHOWN AS BEING EDP REIMBURSABLE ARE 100% EDP REIMBURSABLE AND INCLUDE IMPROVEMENTS WITHIN DOT RIGHT-OF-WAY.
2. QUANTITIES SHOWN AS BEING EDP & LA REIMBURSABLE ARE 50% EDP REIMBURSABLE AND 50% LOCAL AGENCY REIMBURSABLE AND INCLUDE IMPROVEMENTS INSIDE THE GUARDED ROAD DOT RIGHT-OF-WAY.
3. IMPROVEMENTS OUTSIDE OF THE RIGHT OF WAY ARE 100%-SHARE EDP REIMBURSABLE AND ONE-THIRD EDP & LA REIMBURSABLE. NOTE WAS TAKEN AS A RATIO OF LENGTH OF ROADWAY IMPROVEMENTS.
4. CONTRACTOR SHALL MAKE A NOTE ON EACH LOAD TICKET, THE LOCATION QUANTITY IS BEING USED FOR ABOVE
5. CONTRACTOR SHALL VERIFY EARTHWORK QUANTITIES IN MODELING SOFTWARE PRIOR TO BEGINNING THE PROJECT. ANY DISCREPANCIES WITH THE EARTHWORK QUANTITIES NEED TO BE MADE IN WRITING TO THE ENGINEER BEFORE CONSTRUCTION COMMENCES. ONCE CONSTRUCTION HAS STARTED, PAYMENT WILL BE MADE FOR THE QUANTITY AMOUNTS SHOWN IN THE CONTRACT OR AGREED UPON IN WRITING FOR 20200100-EARTH EXCAVATION, 20201100-REMOVAL AND DISPOSAL OF UNSUITABLE MATERIAL, 20400800-FURNISH EXCAVATION, 31101005-TOPSOIL EXCAVATION AND PLACEMENT. ANY UNFORESEE DISCOVERED DURING CONSTRUCTION WILL BE REASONABLE TO THE CONTRACT, VENDOR, 20201100-REMOVAL AND DISPOSAL OF UNSUITABLE MATERIAL AND 20400800-FURNISH EXCAVATION SHALL BE ADJUSTED BASED ON UNSUITABLE SOIL REMOVAL AS DIRECTED BY THE TESTER AND ENGINEER -- QUANTITY ADJUSTMENTS ARE AS MEASURED IN THE FIELD. ALL OTHER QUANTITIES SHALL FOLLOW 202.07 OF THE STANDARD SPECIFICATIONS FOR ROAD AND BRIDGE CONSTRUCTION.
6. EARTHWORK VOLUMES WITHIN THE LIMITS OF PAVEMENT IMPROVEMENTS (INCLUDING THE SOUTHEAST CORNER OF THE INTERSECTION OUTSIDE OF THE RIGHT-OF-WAY) ARE COMPUTED BY METHOD OF AVERAGE END AREAS. EARTHWORK VOLUMES OUTSIDE OF THE LIMITS OF PAVEMENT IMPROVEMENTS AND VOLUMES IN THE SOUTHEAST CORNER OF THE INTERSECTION OUTSIDE OF THE RIGHT-OF-WAY ARE CALCULATED USING CIVIL 3D VOLUME SURFACE ANALYSIS. COMBINED EARTHWORK VOLUMES HAVE BEEN INCLUDED IN 20200100-EARTH EXCAVATION AND 20400800-FURNISH EXCAVATION.
7. NO INCREASE IN UNIT PRICE SHALL OCCUR FOR SUBSURFACING RESULTING FROM CONTRACTOR REQUEST (I.E. MATERIAL SHALL BE BILLED AT LOWER UNIT PRICE).
8. TEMPORARY SIGNING SHALL BE USED FOR TEMPORARY CONSTRUCTION SIGNS FOR TRAFFIC CONTROL. SIGNS WILL ONLY BE PAID FOR THE FIRST INSTANCE IF IS NEEDED. SIGNS THAT CAN BE RELOCATED FROM ONE PHASE TO ANOTHER SHALL BE INCIDENTAL TO THE TRAFFIC CONTROL UNIT PRICE.
9. THE UNIT WEIGHT USED TO CALCULATE ALL HMA SURFACE MIXTURE QUANTITIES IS 112 LBS/SQ YD/IN.
10. PAY CODES INDICATED WITH AN ASTERISK (*) ARE SPECIALTY ITEMS. REFER TO BID PACKAGE FOR ADDITIONAL INFORMATION REGARDING THESE ITEMS.

Copyright © 2021 Jacob & Hefner Associates, INC.

No.	DESCRIPTION	DATE
5	ADDENDUM 1	06/28/21
1	ORIGINAL PLAN DATE	05/07/20

SUMMARY OF QUANTITIES

HIGHWAY IMPROVEMENT PLANS
IL ROUTE 83 & CUTLER ROAD
DECATUR, ILLINOIS

SECTION No. 99-00117-00-WR
JOB No. C-99-109-99

JACOB & HEFNER
215 E. PIKE
SPRINGFIELD, ILLINOIS 62704
(217) 544-8378
FAX (217) 544-8471
Design Firm 184-001192

N.T.S.
D4601

4

Zac,

Per your request, we have the following sources of material on Lot #4 from the ChicagoWest Business Center available. (West of the Ferrrara Distribution building) Exhibit Attached
This material is to be used exclusively for the IDOT Rt. 23 and Gurler Road improvements.
DeKalb 343 LLC and Krusinski Construction Company must be named as additionally insured should the successful bidder elect to use these resources.

-Black Dirt will be available at no cost to the project from the existing stockpile source on site.
-Clay material will be available at a cost of $5 per cubic yard from the existing stockpile source on site.
-(This is to be loaded and hauled by others)

If the bidders would like to inspect and coordinate the material, have them contact our superintendent below.

Bob Shannon
Senior Project Superintendent

Krusinski Construction Company
2107 Swift Drive
Oak Brook, IL 60523
(630) 573-7700 (Office)
(630) 573-7780 (Fax)
(630) 286-1228 (Cell)
http://www.krusinski.com

Stockpile
Location
Approx. 0.36 Miles
Project
Site
CHRIS C
SWAN LN

Local Public Agency	County	Section Number	Route(s) (Street/Road Name)
City of DeKalb	DeKalb	20-00197-00-WR	IL Route 23 and Gurler Road

CONTRACTOR CERTIFICATIONS

The certifications hereinafter made by the bidder are each a material representation of fact upon which reliance is placed should the Department enter into the contract with the bidder.

1. **Debt Delinquency.** The bidder or contractor or subcontractor, respectively, certifies that it is not delinquent in the payment of any tax administered by the Department of Revenue unless the individual or other entity is contesting, in accordance with the procedure established by the appropriate Revenue Act, its liability for the tax or the amount of the tax. Making a false statement voids the contract and allows the Department to recover all amounts paid to the individual or entity under the contract in a civil action.

2. **Bid-Rigging or Bid Rotating**. The bidder or contractor or subcontractor, respectively, certifies that it is not barred from contracting with the Department by reason of a violation of either 720 ILCS 5/33E-3 or 720 ILCS 5/33E-4.

   A violation of section 33E-3 would be represented by a conviction of the crime of bid-rigging which, in addition to Class 3 felony sentencing, provides that any person convicted of this offense, or any similar offense of any state or the United States which contains the same elements as this offense shall be barred for 5 years from the date of conviction from contracting with any unit of State or local government. No corporation shall be barred from contracting with any unit of State or local government as a result of a conviction under this Section of any employee or agent of such corporation if the employee so convicted is no longer employed by the corporation: (1) it has been finally adjudicated not guilty or (2) if it demonstrates to the governmental entity with which it seeks to contract that entity finds that the commission of the offense was neither authorized, requested, commanded, nor performed by a director, officer or a high managerial agent on behalf of the corporation.

   A violation of Section 33E-4 would be represented by a conviction of the crime of bid-rotating which, in addition to Class 2 felony sentencing, provides that any person convicted of this offense or any similar offense of any state or the United States which contains the same elements as this offense shall be permanently barred from contracting with any unit of State of Local government. No corporation shall be barred from contracting with any unit of State or Local government as a result of a conviction under this Section of any employee or agent of such corporation if the employee so convicted is no longer employed by the corporation and: (1) it has been finally adjudicated not guilty or (2) if it demonstrates to the governmental entity with which it seeks to contract and that entity finds that the commission of the offense was neither authorized, requested, commanded, nor performed by a director, officer or a high managerial agent on behalf of the corporation.

3. **Bribery.** The bidder or contractor or subcontractor, respectively, certifies that, it has not been convicted of bribery or attempting to bribe an officer or employee of the State of Illinois or any unit of local government, nor has the firm made an admission of guilt of such conduct which is a matter or record, nor has an official, agent, or employee of the firm committed bribery or attempted bribery on behalf of the firm and pursuant to the direction or authorization of a responsible official of the firm.

4. **Interim Suspension or Suspension.** The bidder or contractor or subcontractor, respectively, certifies that it is not currently under a suspension as defined in Subpart I of Title 44 Subtitle A Chapter III Part 6 of the Illinois Administrative code. Furthermore, if suspended prior to completion of this work, the contract or contracts executed for the completion of this work may be canceled.

Local Public Agency	County	Section Number	Route(s) (Street/Road Name)
City of DeKalb	DeKalb	20-00197-00-WR	IL Route 23 and Gurler Road

SIGNATURES

(If an individual)

Signature of Bidder

Date

Business Address

City

State

Zip Code

(If a partnership)

Firm Name

Signature

Date

Title

Business Address

City

State

Zip Code

Insert the Names and Addresses of all Partners

(If a corporation)

Corporate Name

Curran Contracting Company

Signature

Date

August 23, 2021

Title

Scott Hanson, Vice President

Business Address

286 Memorial Court

City

Crystal Lake

State

IL

Zip Code

60014

CURRAN CONTRACTING COMPANY CORPORATE SEAL 1987 ILLINOIS CORP

Insert Names of Officers

President

Rick Noe

Attest:

AssistantSecretary

Secretary

Catherine C. Curran

Treasurer

Todd Gierke

Schedule of Prices

Illinois Department of Transportation

Contractor's Name: CURRAN CONTRACTING COMPANY

Contractor's Address: 286 MEMORIAL COURT | City: CRYSTAL LAKE | State: IL | Zip Code: 60014

Local Public Agency: City of DeKalb | County: DeKalb | Section Number: 20-00197-00-WR

Route(s) (Street/Road Name): IL Route 23 and Gurler Road

Schedule for Multiple Bids

Combination Letter	Sections Included in Combinations	Total

Schedule for Single Bid

(For complete information covering these items, see plans and specifications.)

Item Number	Items	Unit	Quantity	Unit Price	Total
	See Next doc. for Civil Qtys.				$ 1,305,294.73
	See Next doc. for Signal Qtys.				$ 431,124.64
					$ -
					$ -
					$ -
					$ -
					$ -
					$ -
					$ -
					$ -
					$ -
					$ -
					$ -
					$ -
					$ -
					$ -
					$ -
					$ -
					$ -
				Bidder's Total Proposal	**$ 1,736,419.37**

1. Each pay item should have a unit price and a total price.
2. If no total price is shown or if there is a discrepancy between the product of the unit price multiplied by the quantity, the unit price shall govern.
3. If a unit price is omitted, the total price will be divided by the quantity in order to establish a unit price.
4. A bid may be declared unacceptable if neither a unit price or total price is shown.

JACOB & HEFNER
ASSOCIATES

1333 Butterfield Road, Suite 300
Downers Grove, IL 60515
P 630-652-4600
F 630-652-4601

Property: IL Route 23 & Gurler Road Improvements
DeKalb, IL

JHA Project #: D460f

Bidder Name: Curran Contracting Company Date: 8/30/2021

Base Bid: We, as contractor, having familiarized ourselves with local conditions affecting the work and with the bidding documents, hereby propose to furnish all equipment, materials, labor, and utilities necessary for the scope of work as presented in the plans titled:
Plans for Proposed Intersection Improvement and Traffic Signal Installation for IL Route 23 at Gurler Road, dated 8/13/21

SUMMARY OF QUANTITIES - CIVIL COSTS

PAY CODE	DESCRIPTION	UNITS	QUANTITY	UNIT COST	COST
20200100	EARTH EXCAVATION (STRUCTURAL MATERAIL CUT TO FILL)	CU YD	1,308	$ 80.00	$ 104,640.00
20201200	REMOVAL AND DISPOSAL OF UNSUITABLE MATERIAL (TOPSOIL EXPORT)	CU YD	2,799	$ 0.01	$ 27.99
20201200	REMOVAL AND DISPOSAL OF UNSUITABLE MATERIAL (ALLOWANCE)	CU YD	254	$ 30.00	$ 7,620.00
20400800	FURNISHED EXCAVATION (STRUCTURAL MATERIAL IMPORT & FILL)	CU YD	13,087	$ 0.01	$ 130.87
20800150	TRENCH BACKFILL	CU YD	709	$ 0.01	$ 7.09
21101505	TOPSOIL EXCAVATION AND PLACEMENT	CU YD	3,660	$ 8.25	$ 30,195.00
25000210	SEEDING, CLASS 2A	AC	5	$ 330.00	$ 1,650.00
25100630	EROSION CONTROL BLANKET (NAG SC150 OR APPROVED EQUAL)	SQ YD	21,957	$ 1.70	$ 37,326.90
25100900	TURF REINFORCEMENT MAT (NAG SC 250 OR APPROVED EQUAL)	SQ YD	325	$ 12.50	$ 4,062.50
28000305	TEMPORARY DITCH CHECKS	FOOT	375	$ 10.98	$ 4,117.50
28000400	PERIMETER EROSION BARRIER (SILT FENCE)	FOOT	6,037	$ 1.95	$ 11,772.15
28000500	INLET AND PIPE PROTECTION (CULVERT PROTECTION)	EACH	16	$ 160.00	$ 2,560.00
28000510	INLET FILTERS (INLET PROTECTION)	EACH	4	$ 175.00	$ 700.00
28100105	STONE RIPRAP, CLASS A3	SQ YD	62	$ 23.05	$ 1,429.10
30300001	*AGGREGATE SUBGRADE IMPROVEMENT TO REPLACE ANY UNSUITABLE MATERAIL TO BE REMOVED (CONTRACTOR TO PROVIDE UNIT COST IF NEEDED)	CU YD	1	$ 50.00	$ 50.00
31100300	SUBBASE GRANULAR MATERIAL, TYPE A 4"	SQ YD	8,613	$ 6.78	$ 58,396.14
35101100	AGGREGATE BASE COURSE, TYPE A 12"	SQ YD	542	$ 22.00	$ 11,924.00
35501316	HOT-MIX ASPHALT BASE COURSE, 6"	SQ YD	5,807	$ 31.00	$ 180,017.00
40200900	*AGGREGATE SURFACE COURSE, TYPE B	CU YD	85	$ 65.82	$ 5,594.70
40600275	BITUMINOUS MATERIALS (PRIME COAT)	POUND	20,598	$ 0.01	$ 205.98
40600290	BITUMINOUS MATERIALS (TACK COAT)	POUND	6,489	$ 0.01	$ 64.89
40602970	HOT-MIX ASPHALT BINDER COURSE, IL-9.5FG, N70	TON	186	$ 92.00	$ 17,112.00
40603085	HOT-MIX ASPHALT BINDER COURSE, IL-19.0, N70	TON	1,476	$ 76.00	$ 112,176.00
40604062	HOT-MIX ASPHALT SURFACE COURSE, IL-9.5, MIX "D", N70	TON	1,662	$ 76.00	$ 126,312.00
44000100	PAVEMENT REMOVAL	SQ YD	318	$ 22.00	$ 6,996.00
44000155	HOT-MIX ASPHALT SURFACE REMOVAL, 1 1/2"	SQ YD	5,317	$ 2.75	$ 14,621.75
44000200	DRIVEWAY PAVEMENT REMOVAL	SQ YD	684	$ 13.44	$ 9,192.96
44004250	PAVED SHOULDER REMOVAL	SQ YD	4,102	$ 14.00	$ 57,428.00
44213200	SAWCUT EXISTING PAVEMENT	FOOT	5,207	$ 3.00	$ 15,621.00
48100500	AGGREGATE SHOULDERS, TYPE A 6"	SQ YD	501	$ 14.00	$ 7,014.00
50104400	CONCRETE HEADWALL REMOVAL	EACH	2	$ 2,820.00	$ 5,640.00
50105220	PIPE CULVERT REMOVAL	FOOT	479	$ 23.50	$ 11,256.50
542A0217	PIPE CULVERTS, CLASS A, TYPE 1, 12" (RCP)	FOOT	159	$ 45.12	$ 7,174.08
542A0220	PIPE CULVERTS, CLASS A, TYPE 1, 15" (RCP)	FOOT	221	$ 46.06	$ 10,179.26
542A0223	PIPE CULVERTS, CLASS A, TYPE 1, 18" (RCP)	FOOT	55	$ 47.00	$ 2,585.00

JACOB & HEFNER
ASSOCIATES

1333 Butterfield Road, Suite 300
Downers Grove, IL 60515
P 630-652-4600
F 630-652-4601

PAY CODE	DESCRIPTION	UNITS	QUANTITY	UNIT COST	COST
542A0229	PIPE CULVERTS, CLASS A, TYPE 1, 24" (RCP)	FOOT	98	$ 77.08	$ 7,553.84
542A0235	PIPE CULVERTS, CLASS A, TYPE 1, 30" (RCP)	FOOT	48	$ 333.70	$ 16,017.60
542A5473	PIPE CULVERTS, CLASS A, TYPE 1 EQUIVALENT ROUND-SIZE 18" (RCP)	FOOT	111	$ 58.28	$ 6,469.08
542C0229	PIPE CULVERTS, CLASS C, TYPE 1, 24" (CMP)	FOOT	78	$ 77.08	$ 6,012.24
542C5470	PIPE CULVERTS, CLASS C, TYPE 1 EQUIVALENT ROUND-SIZE 15" (CMP)	FOOT	113	$ 56.40	$ 6,373.20
54213450	END SECTIONS, 15"	EACH	6	$ 2,068.00	$ 12,408.00
54213453	END SECTIONS, 18"	EACH	1	$ 2,538.00	$ 2,538.00
54213657	PRECAST REINFORCED CONCRETE FLARED END SECTIONS 12"	EACH	3	$ 1,692.00	$ 5,076.00
54213660	PRECAST REINFORCED CONCRETE FLARED END SECTIONS 15"	EACH	4	$ 1,786.00	$ 7,144.00
54213669	PRECAST REINFORCED CONCRETE FLARED END SECTIONS 24"	EACH	2	$ 2,068.00	$ 4,136.00
54214293	END SECTIONS, EQUIVALENT ROUND-SIZE 18"	EACH	6	$ 3,088.00	$ 18,528.00
	*GRATING FOR CONCRETE FLARED END SECTION 12"	EACH	3	$ 0.01	$ 0.03
54247124	GRATING FOR CONCRETE FLARED END SECTION 15"	EACH	4	$ 0.01	$ 0.04
54247130	GRATING FOR CONCRETE FLARED END SECTION 24"	EACH	2	$ 0.01	$ 0.02
54262724	METAL FLARED END SECTIONS 24"	EACH	2	$ 591.00	$ 1,182.00
54262815	METAL FLARED END SECTIONS, EQUIVALENT ROUND-SIZE 15"	EACH	4	$ 471.00	$ 1,884.00
550A0380	STORM SEWERS, CLASS A, TYPE 2 18"	FOOT	199	$ 47.94	$ 9,540.06
55100500	STORM SEWER REMOVAL 12" (12" CLAY DRAINTILE)	FOOT	37	$ 23.50	$ 869.50
56400300	*FIRE HYDRANTS TO BE ADJUSTED	EACH	1	$ 2,762.00	$ 2,762.00
60200805	CATCH BASINS, TYPE A, 4'-DIAMETER, TYPE 8 GRATE	EACH	1	$ 3,008.00	$ 3,008.00
60218400	MANHOLES, TYPE A, 4'-DIAMETER, TYPE 1 FRAME, CLOSED LID	EACH	1	$ 2,256.00	$ 2,256.00
60221100	MANHOLES, TYPE A, 5'-DIAMETER, TYPE 1 FRAME, CLOSED LID	EACH	1	$ 2,914.00	$ 2,914.00
60255500	MANHOLES TO BE ADJUSTED	EACH	1	$ 846.00	$ 846.00
60500060	REMOVE INLETS	EACH	1	$ 1,598.00	$ 1,598.00
67100100	*MOBILIZATION	LSUM	1	$ 125,550.00	$ 125,550.00
70100450	TRAFFIC CONTROL AND PROTECTION, STANDARD 701201	LSUM	1	$ 1.00	$ 1.00
70100460	TRAFFIC CONTROL AND PROTECTION, STANDARD 701306	LSUM	1	$ 1.00	$ 1.00
70100500	TRAFFIC CONTROL AND PROTECTION, STANDARD 701326	LSUM	1	$ 1.00	$ 1.00
70102620	TRAFFIC CONTROL AND PROTECTION, STANDARD 701501	LSUM	1	$ 500.00	$ 500.00
70102622	TRAFFIC CONTROL AND PROTECTION, STANDARD 701502	LSUM	1	$ 1.00	$ 1.00
70102635	TRAFFIC CONTROL AND PROTECTION, STANDARD 701701	LSUM	1	$ 1.00	$ 1.00
70300904	*PAVEMENT MARKING TAPE, TYPE IV 4"	FOOT	12,661	$ 1.00	$ 12,661.00
70300924	*PAVEMENT MARKING TAPE, TYPE IV 24"	FOOT	20	$ 7.00	$ 140.00
72000100	SIGN PANEL - TYPE 1	SQ FT	79	$ 20.00	$ 1,580.00
72000200	SIGN PANEL - TYPE 2	SQ FT	65	$ 32.00	$ 2,080.00
72300100	INSTALL EXISTING SIGN PANEL	SQ FT	2	$ 85.00	$ 170.00
72400100	REMOVE SIGN PANEL ASSEMBLY - TYPE A	EACH	5	$ 50.00	$ 250.00
72400310	REMOVE SIGN PANEL - TYPE 1	SQ FT	23	$ 15.00	$ 345.00
72400500	RELOCATE SIGN PANEL ASSEMBLY - TYPE A	EACH	3	$ 100.00	$ 300.00
72400600	RELOCATE SIGN PANEL ASSMEBLY - TYPE B	EACH	1	$ 150.00	$ 150.00
73000100	WOOD SIGN SUPPORT	FOOT	252	$ 36.00	$ 9,072.00
78000100	THERMOPLASTIC PAVEMENT MARKING - LETTERS AND SYMBOLS	SQ FT	211	$ 4.50	$ 949.50
78000200	THERMOPLASTIC PAVEMENT MARKING - LINE 4"	FOOT	1,146	$ 1.20	$ 1,375.20
78000600	THERMOPLASTIC PAVEMENT MARKING - LINE 12"	FOOT	403	$ 3.85	$ 1,551.55

JACOB & HEFNER
ASSOCIATES

1333 Butterfield Road, Suite 300
Downers Grove, IL 60515
P 630-652-4600
F 630-652-4601

PAY CODE	DESCRIPTION	UNITS	QUANTITY	UNIT COST	COST
78003180	PERFORMED PLASTIC PAVEMENT MARKING, TYPE B - 24" (GROOVED)	FOOT	107	$ 82.60	$ 8,838.20
78100100	RAISED REFLECTIVE PAVEMENT MARKER	EACH	119	$ 66.90	$ 7,961.10
78300200	RAISED REFLECTIVE PAVEMENT MARKER REMOVAL	EACH	35	$ 15.00	$ 525.00
78300201	PAVEMENT MARKING REMOVAL - GRINDING	SQ FT	1,303	$ 0.90	$ 1,172.70
78300202	PAVEMENT MARKING REMOVAL - WATER BLASTING	SQ FT	483	$ 4.25	$ 2,052.75
X0322936	*REMOVE EXISTING FLARED END SECTION	EACH	24	$ 141.00	$ 3,384.00
X0326806	*WASHOUT BASIN	LSUM	1	$ 1,331.79	$ 1,331.79
X0327301	*RELOCATE EXISTING MAILBOX	EACH	12	$ 474.53	$ 5,694.36
X0327366	*TEMPORARY AGGREGATE WEDGE	TON	13	$ 16.00	$ 208.00
	*CONCRETE COLLARS	EACH	4	$ 470.00	$ 1,880.00
X1700063	*CONCRETE HEADWALL (SPECIAL)	EACH	2	$ 8,500.00	$ 17,000.00
X2200020	*FENCE REMOVAL AND REINSTALLATION	FOOT	130	$ 87.76	$ 11,408.80
X2700017	*GROOVED THERMOPLASTIC PAVEMENT MARKING - 4"	FOOT	14,938	$ 1.30	$ 19,419.40
X2700018	*GROOVED THERMOPLASTIC PAVEMENT MARKING - 6"	FOOT	253	$ 1.95	$ 493.35
	*GROOVED THERMOPLASTIC PAVEMENT MARKING - 8"	FOOT	1,458	$ 2.60	$ 3,790.80
X4810200	*AGGREGATE SHOULDER REMOVAL	CU YD	1,019	$ 5.19	$ 5,288.61
X7010216	*TRAFFIC CONTROL AND PROTECTION, (SPECIAL)	LSUM	1	$ 15,295.00	$ 15,295.00
X7030005	*TEMPORARY PAVEMENT MARKING REMOVAL	SQ FT	5,609	$ 0.30	$ 1,682.70
Z0019500	*DRYWELL	EACH	1	$ 1,880.00	$ 1,880.00
Z0029602	*TEMPORARY SIGNING	EACH	20	$ 150.00	$ 3,000.00
Z0030850	*TEMPORARY INFORMATION SIGNING	SQ FT	84	$ 14.00	$ 1,176.00
Z0033700	*LONGITUDINAL JOINT SEALANT	FOOT	9,395	$ 2.25	$ 21,138.75
	*24" HDPE N-12 PIPE	FOOT	385	$ 73.32	$ 28,228.20
	*REESTABLISH EXISTING BENCHMARK	EACH	1	$ 750.00	$ 750.00
	*FENCE POST REMOVAL	EACH	1	$ 100.00	$ 100.00
				CIVIL COSTS =	$ 1,305,294.73

SUMMARY OF QUANTITIES - SIGNAL COSTS

PAY CODE	DESCRIPTION	UNITS	QUANTITY	UNIT COST	COST
70106800	CHANGEABLE MESSAGE SIGN	CAL MO	1	$ 850.00	$ 850.00
72000100	SIGN PANEL - TYPE 1	SQ FT	73	$ 32.00	$ 2,336.00
80500010	SERVICE INSTALLATION - GROUND MOUNTED	EACH	1	$ 2,150.00	$ 2,150.00
81028170	UNDERGROUND CONDUIT, GALVANIZED STEEL, 1 1/4" DIA.	FOOT	12	$ 23.70	$ 284.40
81028240	UNDERGROUND CONDUIT, GALVANIZED STEEL, 4" DIA.	FOOT	307	$ 59.50	$ 18,266.50
81028340	UNDERGROUND CONDUIT, PVC, 1 1/2" DIA.	FOOT	735	$ 16.75	$ 12,311.25
81028350	UNDERGROUND CONDUIT, PVC, 2" DIA.	FOOT	29	$ 28.90	$ 838.10
81028370	UNDERGROUND CONDUIT, PVC, 3" DIA.	FOOT	150	$ 33.90	$ 5,085.00
81028390	UNDERGROUND CONDUIT, PVC, 4" DIA.	FOOT	4	$ 58.20	$ 232.80
81400700	HANDHOLE, PORTLAND CEMENT CONCRETE	EACH	4	$ 2,270.00	$ 9,080.00
81400720	DOUBLE HANDHOLE, PORTLAND CEMENT CONCRETE	EACH	1	$ 3,500.00	$ 3,500.00
81702110	ELECTRIC CABLE IN CONDUIT, 600V (XLP-TYPE USE) 1/C NO. 10	FOOT	2700	$ 1.10	$ 2,970.00
81702450	ELECTRIC CABLE IN CONDUIT, 600V (XLP-TYPE USE) 3-1/C NO. 10	FOOT	889.5	$ 2.50	$ 2,223.75
82102250	LUMINAIRE, LED, ROADWAY, OUTPUT DESIGNATION G	EACH	4	$ 765.00	$ 3,060.00
86200101	UNINTERRUPTABLE POWER SUPPLY	EACH	1	$ 5,850.00	$ 5,850.00
87301225	ELECTRIC CABLE IN CONDUIT, SIGNAL NO. 14 3C	FOOT	603	$ 1.39	$ 838.17

JACOB & HEFNER
ASSOCIATES

1333 Butterfield Road, Suite 300
Downers Grove, IL 60515
P 630-652-4600
F 630-652-4601

PAY CODE	DESCRIPTION	UNITS	QUANTITY	UNIT COST	COST
87301245	ELECTRIC CABLE IN CONDUIT, SIGNAL NO. 14 5C	FOOT	1947.5	$ 1.52	$ 2,960.20
87301255	ELECTRIC CABLE IN CONDUIT, SIGNAL NO. 14 7C	FOOT	2440.5	$ 1.69	$ 4,124.45
87301805	ELECTRIC CABLE IN CONDUIT, SERVICE, NO. 6 2 C	FOOT	57	$ 2.90	$ 165.30
87301900	ELECTRIC CABLE IN CONDUIT, EQUIPMENT GROUNDING CONDUCTOR, NO. 6 1C	FOOT	501.5	$ 2.55	$ 1,278.83
87502500	TRAFFIC SIGNAL POST, GALVANIZED STEEL 16 FT.	EACH	4	$ 1,090.00	$ 4,360.00
87702950	STEEL COMBINATION MAST ARM ASSEMBLY AND POLE 44 FT.	EACH	1	$ 19,620.00	$ 19,620.00
87702970	STEEL COMBINATION MAST ARM ASSEMBLY AND POLE 48 FT.	EACH	1	$ 21,885.00	$ 21,885.00
87702980	STEEL COMBINATION MAST ARM ASSEMBLY AND POLE 50 FT.	EACH	1	$ 21,995.00	$ 21,995.00
87702985	STEEL COMBINATION MAST ARM ASSEMBLY AND POLE 52 FT.	EACH	1	$ 22,440.00	$ 22,440.00
87800100	CONCRETE FOUNDATION, TYPE A	FOOT	12	$ 240.00	$ 2,880.00
87800150	CONCRETE FOUNDATION, TYPE C	FOOT	3	$ 695.00	$ 2,085.00
87800415	CONCRETE FOUNDATION, TYPE E 36-INCH DIAMETER	FOOT	56	$ 330.00	$ 18,480.00
88040020	SIGNAL HEAD, POLYCARBONATE, LED, 1-FACE, 1-SECTION, BRACKET MOUNTED	EACH	1	$ 405.00	$ 405.00
88040070	SIGNAL HEAD, POLYCARBONATE, LED, 1-FACE, 3-SECTION, BRACKET MOUNTED	EACH	2	$ 810.00	$ 1,620.00
88040090	SIGNAL HEAD, POLYCARBONATE, LED, 1-FACE, 3-SECTION, MAST ARM	EACH	5	$ 915.00	$ 4,575.00
88040150	SIGNAL HEAD, POLYCARBONATE, LED, 1-FACE, 5-SECTION, BRACKET MOUNTED	EACH	5	$ 1,120.00	$ 5,600.00
88040160	SIGNAL HEAD, POLYCARBONATE, LED, 1-FACE, 5-SECTION, MAST ARM	EACH	5	$ 1,230.00	$ 6,150.00
88200410	TRAFFIC SIGNAL BACKPLATE, LOUVERED, FORMED PLASTIC	EACH	17	$ 245.00	$ 4,165.00
88700090	CONFIRMATION BEACON	EACH	2	$ 90.00	$ 180.00
88700200	LIGHT DETECTOR	EACH	2	$ 1,630.00	$ 3,260.00
88700300	LIGHT DETECTOR AMPLIFIER	EACH	1	$ 2,780.00	$ 2,780.00
X1400215	REMOTE-CONTROLLED VIDEO SYSTEM	EACH	1	$ 28,660.00	$ 28,660.00
X8250091	COMBINATION LIGHTING CONTROLLER	EACH	1	$ 1,490.00	$ 1,490.00
X0324085	EMERGENCY VEHICLE PRIORITY SYSTEM LINE SENSOR CABLE, NO. 20 3/C	FOOT	619	$ 2.10	$ 1,299.90
X8570226	FULL-ACTUATED CONTROLLER AND TYPE IV CABINET, SPECIAL	EACH	1	$ 22,900.00	$ 22,900.00
Z0033072	VIDEO VEHICLE DETECTION SYSTEM	EACH	1	$ 154,000.00	$ 154,000.00
X0325839	PERMANENT TRAFFIC SIGNAL TIMING	EACH	1	$ 1,890.00	$ 1,890.00
				SIGNAL COSTS =	$ 431,124.64

GRAND TOTAL =	$ 1,736,419.37

Note: Bid table above does not include public utility removal. It is assumed that public utility companies will be responsible for costs.
Contractor is responsible for FIELD verifying all quantities prior to submitting bid. No change orders will be granted for items that could have iden prior to bid submittal

In signing and submitting this Bid, the undersigned agrees to furnish all materials and labor as required to complete the work as proposed in the Contract
Documents.

Office Address: 286 Memorial Court, Crystal Lake, IL 60014

By: Jeffery Pennino — Signature | Jeff Pennino — Printed/Typed | August 30, 2021 — Date

Contractor to list all addendum received below to serve as proof of receipt of addendum: Addendum 1 - 8/26/2021

Illinois Department of Transportation

Local Public Agency Proposal Bid Bond

Local Public Agency	County	Section Number
City of DeKalb	DeKalb	20-00197-00-WR

WE, Curran Contracting Company as PRINCIPAL, and Continental Casualty Company as SURETY, are held jointly, severally and firmly bound unto the above Local Public Agency (hereafter referred to as "LPA") in the penal sum of 5% of the total bid price, or for the amount specified in the proposal documents in effect on the date of invitation for bids, whichever is the lesser sum. We bind ourselves, our heirs, executors, administrators, successors, and assigns, jointly pay to the LPA this sum under the conditions of this instrument.

WHEREAS THE CONDITION OF THE FOREGOING OBLIGATION IS SUCH that, the said PRINCIPAL is submitting a written proposal to the LPA acting through its awarding authority for the construction of the work designated as the above section.

THEREFORE if the proposal is accepted and a contract awarded to the PRINCIPAL by the LPA for the above designated section and the PRINCIPAL shall within fifteen (15) days after award enter into a formal contract, furnish surety guaranteeing the faithful performance of the work, and furnish evidence of the required insurance coverage, all as provided in the "Standard Specifications for Road and Bridge Construction" and applicable Supplemental Specifications, then this obligation shall become void; otherwise it shall remain in full force and effect.

IN THE EVENT the LPA determines the PRINCIPAL has failed to enter into a formal contract in compliance with any requirements set forth in the preceding paragraph, then the LPA acting through its awarding authority shall immediately be entitled to recover the full penal sum set out above, together with all court costs, all attorney fees, and any other expense of recovery.

IN TESTIMONY WHEREOF, the said PRINCIPAL and the said SURETY have caused this instrument to be signed by their respective officers this 30th (Day) of August, 2021 (Month and Year)

Principal

Company Name		Company Name	
Curran Contracting Company			
Signature	Date	Signature	Date
By:	8/30/21	By:	
Title		Title	
Nick Schram, Vice President			

(If Principal is a joint venture of two or more contractors, the company names and authorized signatures of each contractor must be affixed.)

Surety

Name of Surety	Signature of Attorney-in-Fact	Date
Continental Casualty Company	By: Kimberly Bragg	8/30/2021

STATE OF IL Illinois
COUNTY OF Cook

I Susan K. Landreth, a Notary Public in and for said county do hereby certify that Nick Schram and Kimberly Bragg (Insert names of individuals signing on behalf of PRINCIPAL & SURETY) who are each personally known to me to be the same persons whose names are subscribed to the foregoing instrument on behalf of PRINCIPAL and SURETY, appeared before me this day in person and acknowledged respectively, that they signed and delivered said instruments as their free and voluntary act for the uses and purposes therein set forth.

Given under my hand and notarial seal this 30th (Day) day of August, 2021 (Month and Year).

(SEAL)

"OFFICIAL SEAL"
SUSAN K. LANDRETH
NOTARY PUBLIC, STATE OF ILLINOIS
MY COMMISSION EXPIRES 5/18/2023

Notary Public Signature: Susan K Landreth

Date commission expires May 18, 2023

Local Public Agency	County	Section Number
City of DeKalb	DeKalb	20-00197-00-WR

ELECTRONIC BID BOND

☐ **Electronic bid bond is allowed (box must be checked by LPA if electronic bid bond is allowed)**

The Principal may submit an electronic bid bond, in lieu of completing the above section of the Proposal Bid Bond Form. By providing an electronic bid bond ID code and signing below, the Principal is ensuring the identified electronic bid bond has been executed and the Principal and Surety are firmly bound unto the LPA under the conditions of the bid bond as shown above. (If PRINCIPAL is a joint venture of two or more contractors, an electronic bid bond ID code, company/Bidder name title and date must be affixed for each contractor in the venture.)

Electronic Bid Bond ID Code

Company/Bidder Name

Signature

Date

Title

POWER OF ATTORNEY APPOINTING INDIVIDUAL ATTORNEY-IN-FACT

Know All Men By These Presents, That Continental Casualty Company, an Illinois insurance company, National Fire Insurance Company of Hartford, an Illinois insurance company, and American Casualty Company of Reading, Pennsylvania, a Pennsylvania insurance company (herein called "the CNA Companies"), are duly organized and existing insurance companies having their principal offices in the City of Chicago, and State of Illinois, and that they do by virtue of the signatures and seals herein affixed hereby make, constitute and appoint

Kimberly Bragg , Individually

of ,Chicago, IL , their true and lawful Attorney(s)-in-Fact with full power and authority hereby conferred to sign, seal and execute for and on their behalf bonds, undertakings and other obligatory instruments of similar nature

- In Unlimited Amounts -

Surety Bond No.: Bid Bond
Principal: Curran Contracting Company
Obligee: City of DeKalb

and to bind them thereby as fully and to the same extent as if such instruments were signed by a duly authorized officer of their insurance companies and all the acts of said Attorney, pursuant to the authority hereby given is hereby ratified and confirmed.

This Power of Attorney is made and executed pursuant to and by authority of the By-Law and Resolutions, printed on the reverse hereof, duly adopted, as indicated, by the Boards of Directors of the insurance companies.

In Witness Whereof, the CNA Companies have caused these presents to be signed by their Vice President and their corporate seals to be hereto affixed on this 16th day of June, 2021.

Continental Casualty Company
National Fire Insurance Company of Hartford
American Casualty Company of Reading, Pennsylvania

Paul T. Bruflat — Vice President

State of South Dakota, County of Minnehaha, ss:

On this 16th day of June, 2021, before me personally came Paul T. Bruflat to me known, who, being by me duly sworn, did depose and say: that he resides in the City of Sioux Falls, State of South Dakota; that he is a Vice President of Continental Casualty Company, an Illinois insurance company, National Fire Insurance Company of Hartford, an Illinois insurance company, and American Casualty Company of Reading, Pennsylvania, a Pennsylvania insurance company described in and which executed the above instrument; that he knows the seals of said insurance companies; that the seals affixed to the said instrument are such corporate seals; that they were so affixed pursuant to authority given by the Boards of Directors of said insurance companies and that he signed his name thereto pursuant to like authority, and acknowledges same to be the act and deed of said insurance companies.

M. BENT NOTARY PUBLIC SOUTH DAKOTA

My Commission Expires March 2, 2026

M. Bent — Notary Public

CERTIFICATE

I, D. Johnson, Assistant Secretary of Continental Casualty Company, an Illinois insurance company, National Fire Insurance Company of Hartford, an Illinois insurance company, and American Casualty Company of Reading, Pennsylvania, a Pennsylvania insurance company do hereby certify that the Power of Attorney herein above set forth is still in force, and further certify that the By-Law and Resolution of the Board of Directors of the insurance companies printed on the reverse hereof is still in force. In testimony whereof I have hereunto subscribed my name and affixed the seal of the said insurance companies this 30th day of August, 2021.

Continental Casualty Company
National Fire Insurance Company of Hartford
American Casualty Company of Reading, Pennsylvania

D. Johnson — Assistant Secretary

Form F6853-4/2012

Go to www.cnasurety.com > Owner / Obligee Services > Validate Bond Coverage, if you want to verify bond authenticity.

Authorizing By-Laws and Resolutions

ADOPTED BY THE BOARD OF DIRECTORS OF CONTINENTAL CASUALTY COMPANY:

This Power of Attorney is made and executed pursuant to and by authority of the following resolution duly adopted by the Board of Directors of the Company at a meeting held on May 12, 1995:

"RESOLVED: That any Senior or Group Vice President may authorize an officer to sign specific documents, agreements and instruments on behalf of the Company provided that the name of such authorized officer and a description of the documents, agreements or instruments that such officer may sign will be provided in writing by the Senior or Group Vice President to the Secretary of the Company prior to such execution becoming effective."

This Power of Attorney is signed by Paul T. Bruflat, Vice President, who has been authorized pursuant to the above resolution to execute power of attorneys on behalf of Continental Casualty Company.

This Power of Attorney is signed and sealed by facsimile under and by the authority of the following Resolution adopted by the Board of Directors of the Company by unanimous written consent dated the 25th day of April, 2012:

"Whereas, the bylaws of the Company or specific resolution of the Board of Directors has authorized various officers (the "Authorized Officers")to execute various policies, bonds, undertakings and other obligatory instruments of like nature; and

Whereas, from time to time, the signature of the Authorized Officers, in addition to being provided in original, hard copy format, may be provided via facsimile or otherwise in an electronic format (collectively, "Electronic Signatures"); Now therefore be it resolved: that the Electronic Signature of any Authorized Officer shall be valid and binding on the Company. "

ADOPTED BY THE BOARD OF DIRECTORS OF NATIONAL FIRE INSURANCE COMPANY OF HARTFORD:

This Power of Attorney is made and executed pursuant to and by authority of the following resolution duly adopted by the Board of Directors of the Company by unanimous written consent dated May 10, 1995:

"RESOLVED: That any Senior or Group Vice President may authorize an officer to sign specific documents, agreements and instruments on behalf of the Company provided that the name of such authorized officer and a description of the documents, agreements or instruments that such officer may sign will be provided in writing by the Senior or Group Vice President to the Secretary of the Company prior to such execution becoming effective."

This Power of Attorney is signed by Paul T. Bruflat, Vice President, who has been authorized pursuant to the above resolution to execute power of attorneys on behalf of National Fire Insurance Company of Hartford.

This Power of Attorney is signed and sealed by facsimile under and by the authority of the following Resolution adopted by the Board of Directors of the Company by unanimous written consent dated the 25th day of April, 2012:

"Whereas, the bylaws of the Company or specific resolution of the Board of Directors has authorized various officers (the "Authorized Officers")to execute various policies, bonds, undertakings and other obligatory instruments of like nature; and

Whereas, from time to time, the signature of the Authorized Officers, in addition to being provided in original, hard copy format, may be provided via facsimile or otherwise in an electronic format (collectively, "Electronic Signatures"); Now therefore be it resolved: that the Electronic Signature of any Authorized Officer shall be valid and binding on the Company. "

ADOPTED BY THE BOARD OF DIRECTORS OF AMERICAN CASUALTY COMPANY OF READING, PENNSYLVANIA:

This Power of Attorney is made and executed pursuant to and by authority of the following resolution duly adopted by the Board of Directors of the Company by unanimous written consent dated May 10, 1995:

"RESOLVED: That any Senior or Group Vice President may authorize an officer to sign specific documents, agreements and instruments on behalf of the Company provided that the name of such authorized officer and a description of the documents, agreements or instruments that such officer may sign will be provided in writing by the Senior or Group Vice President to the Secretary of the Company prior to such execution becoming effective."

This Power of Attorney is signed by Paul T. Bruflat, Vice President, who has been authorized pursuant to the above resolution to execute power of attorneys on behalf of American Casualty Company of Reading, Pennsylvania.

This Power of Attorney is signed and sealed by facsimile under and by the authority of the following Resolution adopted by the Board of Directors of the Company by unanimous written consent dated the 25th day of April, 2012:

"Whereas, the bylaws of the Company or specific resolution of the Board of Directors has authorized various officers (the "Authorized Officers")to execute various policies, bonds, undertakings and other obligatory instruments of like nature; and

Whereas, from time to time, the signature of the Authorized Officers, in addition to being provided in original, hard copy format, may be provided via facsimile or otherwise in an electronic format (collectively, "Electronic Signatures"); Now therefore be it resolved: that the Electronic Signature of any Authorized Officer shall be valid and binding on the Company. "

Illinois Department of Transportation

Apprenticeship and Training Program Certification

Local Public Agency	County	Street Name/Road Name	Section Number
City of DeKalb	DeKalb	IL Route 23 & Gurler Road	20-00197-00-WR

All contractors are required to complete the following certification

☒ For this contract proposal or for all bidding groups in this deliver and install proposal.

☐ For the following deliver and install bidding groups in this material proposal.

Illinois Department of Transportation policy, adopted in accordance with the provisions of the Illinois Highway Code, requires this contract to be awarded to the lowest responsive and responsible bidder. The award decision is subject to approval by the Department. In addition to all other responsibility factors, this contract or deliver and install proposal requires all bidders and all bidder's subcontractors to disclose participation in apprenticeship or training programs that are (1) approved by and registered with the United States Department of Labor's Bureau of Apprenticeship and Training, and (2) applicable to the work of the above indicated proposals or groups. Therefore, all bidders are required to complete the following certification:

1. Except as provided in paragraph 4 below, the undersigned bidder certifies that it is a participant, either as an individual or as part of a group program, in an approved apprenticeship or training program applicable to each type of work or craft that the bidder will perform with its own employees.

2. The undersigned bidder further certifies, for work to be performed by subcontract, that each of its subcontractors either (A) is, at the time of such bid, participating in an approved, applicable apprenticeship or training program; or (B) will, prior to commencement of performance of work pursuant to this contract, establish participation in an approved apprenticeship or training program applicable to the work of the subcontract.

3. The undersigned bidder, by inclusion in the list in the space below, certifies the official name of each program sponsor holding the Certificate of Registration for all of the types of work or crafts in which the bidder is a participant and that will be performed with the bidder's employees. Types of work or craft that will be subcontracted shall be included and listed as subcontract work. The list shall also indicate any type of work or craft job category for which there is no applicable apprenticeship or training program available.

Central Laborers' Pension, Welfare and Annuity Funds Local #'s 32 & 727, North Central Illinois Laborers' Health and Welfare Fund Local #'s 32 & 727, Fox Valley & Vicinity Laborers' Health and Welfare and Pension Funds Local #'s 1035 & 582, Laborers' Pension and Welfare Funds for Chicago and Vicinity Local #152, Suburban Teamsters of Northern Illinois Welfare and Pension Funds Local #330, Chauffeurs, Teamsters, and Helpers Local Union No. 301, I. B. of T. Local #301, Midwest Operating Engineers, Local #150

4. Except for any work identified above, if any bidder or subcontractor shall perform all or part of the work of the contract or deliver and install proposal solely by individual owners, partners or members and not by employees to whom the payment of prevailing rates of wages would be required, check the following box, and identify the owner/operator workforces and positions of ownership. ☐

The requirements of this certification and disclosure are a material part of the contract, and the contractor shall require this certification provision to be included in all approved subcontracts. The bidder is responsible for making a complete report and shall make certain that each type of work or craft job category that will be utilized on the project is accounted for and listed. The Department at any time before or afterward may require the production of a copy of each applicable Certificate of Registration issued by the United States Department of Labor evidencing such participation by the contractor and any or all of its subcontractors. In order to fulfill the participation requirement, it shall not be necessary that any applicable program sponsor be currently taking or that it will take applications for apprenticeship, training or employment during the performance of the work of this contract or deliver and install proposal.

Bidder	Signature	Date
Curran Contracting Company		August 23, 2021
Title		
Scott Hanson, Vice President		

Address	City	State	Zip Code
286 Memorial Court	Crystal Lake	IL	60014

Illinois Department of Transportation

Affidavit of Illinois Business Office

Local Public Agency	County	Street Name/Road Name	Section Number
City of DeKalb	DeKalb	IL Route 23 & Gurler Road	20-00197-00-WR

I, Scott Hanson (Name of Affiant) of Crystal Lake (City of Affiant), Illinois (State of Affiant),
being first duly sworn upon oath, state as follows:

1. That I am the Vice President (Officer or Position) of Curran Contracting Company (Bidder).
2. That I have personal knowledge of the facts herein stated.
3. That, if selected under the proposal described above, Curran Contracting Company (Bidder), will maintain a business office in the State of Illinois, which will be located in McHenry (County) County, Illinois.
4. That this business office will serve as the primary place of employment for any persons employed in the construction contemplated by this proposal.
5. That this Affidavit is given as a requirement of state law as provided in Section 30-22(8) of the Illinois Procurement Code.

Signature	Date
	August 23, 2021

Print Name of Affiant: Scott Hanson, Vice President

Notary Public

State of IL

County McHenry

Signed (or subscribed or attested) before me on 8/23/2021 (date) by

Scott Hanson and Kim Bolanowski (name/s of person/s), authorized agent(s) of

Curran Contracting Company (Bidder).

Signature of Notary Public

My commission expires 11/17/24

(SEAL)

OFFICIAL SEAL
JEANNINE L GARRIEPY
NOTARY PUBLIC - STATE OF ILLINOIS
MY COMMISSION EXPIRES:11/17/24

Illinois Department of Transportation

Affidavit of Availability

For the Letting of 1/15/2021
(Letting date)

Instructions: Complete this form by either typing or using black ink. "Authorization to Bid" will not be issued unless both sides of this form are completed in detail. Use additional forms as needed to list all work.

Part I. Work Under Contract

List below all work you have under contract as either a prime contractor or a subcontractor. It is required to include all pending low bids not yet awarded or rejected. In a joint venture, list only that portion of work which is the responsibility of your company. The uncompleted dollar value is to be based upon the most recent engineer's or vendor estimate, and must include work subcontracted to others. If no work is contracted, show NONE.

	Fernal Cyngenics	High Noon	High Noon - IBOS	09-20-0015		
	1	2	3	4	Awards Pending	
County	Kane	DeKalb	DeKalb	Lake		
Contract Number	47000018638	2000001	31.01	09-20-0015		
Contract With	Barton Malow	Mortenson	Mortenson	Caccatorie		
Estimated Completion Date	9/1/2021	12/31/2021	8/31/2021	6/30/2021		
Total Contract Price	270,669.00	20,938,578.00	783,948.00	722,340.00		Accumulated Totals
Uncompleted Dollar Value if Firm is the Prime Contractor				149,753.00		149,753.00
Uncompleted Dollar Value if Firm is the Subcontractor	12,000.00	5,000,000.00	489,051.00			5,501,101.00
				Total Value of All Work		5,650,854.00

Part II. Awards Pending and Uncompleted Work to be done with your own forces.

List below the uncompleted dollar value of work for each contract and award is pending to be completed with your own forces. All work subcontracted to others will be listed on the reverse of this form. In a joint venture, list only that portion of the work to be done by your company. If no work is contracted, show NONE

						Accumulated Totals
Earthwork	5,000.00	1,000,000.00	60,000.00	16,119.00		1,081,119.00
Portland Cement Concrete Paving						0.00
HMA Plant Mix			90,398.00			90,398.00
HMA Paving				62,634.00		62,634.00
Clean & Seal Cracks/Joints						0.00
Aggregate Bases & Surfaces	7,000.00	4,000,000.00	160,053.00			4,167,173.00
Hwy .R.R. & Waterway Structures						0.00
Drainage						0.00
Electrical						0.00
Cover and Seal Coats						0.00
Concrete Construction						0.00
Landscaping						0.00
Fencing						0.00
Guardrail						0.00
Painting						0.00
Signing						0.00
Cold Milling, Planning & Rotomilling						0.00
Demolition						0.00
Pavement Markings (Paint)						0.00
Field Office						0.00
Traffic Control						0.00
Other Construction						0.00
Totals	12,000.00	5,000,000.00	310,479.00	78,753.00	0.00	5,401,332.00

Disclosure of this information is REQUIRED to accomplish the statutory purpose as outlined in the "Illinois Procurement Code". Failure to comply will result in non-issuance of an "Authorization To Bid." This form has been approved by the State Forms Management Center.

Part III. Work Subcontracted to Others

For each contract described in Part I, list all the work you have subcontracted to others.

	High Noon		High Noon - IBOS		
	1	2	3	4	Awards Pending
Subcontractor	None	Clean Cut Tree Service	Elliott & Wood	ABI	
Type of Work		Tree Removal	Site Concrete	Concrete	
Subcontract Price		4,400.00	189,332.00	41,530.00	
Amount Uncompleted			189,332.00	30,000.00	
Subcontractor		Joe Cooling	Joe Cooling	Arlega	
Type of Work		Silt Fence	Silt Fence & Seed	Landscaping	
Subcontract Price		60,138.00	11,474.00	16,567.50	
Amount Uncompleted			6,000.00	12,000.00	
Subcontractor		Mt. Carmel Stabilization	Demarr Sealcoating	Stark & Sons	
Type of Work		Cement Stabilization	Striping/Signage	Underground	
Subcontract Price		3,097,938.00	1,200.00	259,188.00	
Amount Uncompleted			1,200.00	20,000.00	
Subcontractor		Mizak			
Type of Work		Demolition			
Subcontract Price		25,000.00			
Amount Uncompleted					
Subcontractor					
Type of Work					
Subcontract Price					
Amount Uncompleted					
Subcontractor					
Type of Work					
Subcontract Price					
Amount Uncompleted					
Subcontractor					
Type of Work					
Subcontract Price					
Amount Uncompleted					
Total Uncompleted	0.00	0.00	178,532.00	71,000.00	0.00

I, being duly sworn, do hereby declare this affidavit to a true and correct statement relating to ALL uncompleted contracts of the undersigned for Federal, State, County, City and private work, including ALL subcontract work, ALL pending low bids not yet awarded or rejected and ALL estimated completion dates

Subscribed and sworn to before me

this 21st day of January 20 21

Jacqueline M Wallace
Notary Public

My commission expires: 8-28-24

(Notary Seal)

Type or Print Name Michael Pachla, Vice President
Officer or Director Title

Signed Michael Pachla

Company Curran Contracting Company

Address 288 Memorial Court
Crystal Lake, IL 60014

OFFICIAL SEAL
JACQUELINE M WALLACE
NOTARY PUBLIC - STATE OF ILLINOIS
MY COMMISSION EXPIRES:08/28/24

Illinois Department of Transportation

Affidavit of Availability

For the Letting of 1/15/2021
(Letting date)

Instructions: Complete this form by either typing or using black ink. "Authorization to Bid" will not be issued unless both sides of this form are completed in detail. Use additional forms as needed to list all work.

Part I. Work Under Contract

List below all work you have under contract as either a prime contractor or a subcontractor. It is required to include all pending low bids not yet awarded or rejected. In a joint venture, list only that portion of work which is the responsibility of your company. The uncompleted dollar value is to be based upon the most recent engineer's or owner estimate, and must include work subcontracted to others. If no work is contracted, show NONE.

	04-20-0007 1	2	3	4	Awards Pending	
County	Winnebago					
Contract Number	RR-10-4603					
Contract With	ISTHA					
Estimated Completion Date	5/1/2021					
Total Contract Price	4,935,689.42					Accumulated Totals
Uncompleted Dollar Value if Firm is the Prime Contractor	250,000.00					250,000.00
Uncompleted Dollar Value if Firm is the Subcontractor						149,763.00
				Total Value of All Work		399,763.00

Part II. Awards Pending and Uncompleted Work to be done with your own forces.

List below the uncompleted dollar value of work for each contract and award is pending to be completed with your own forces. All work subcontracted to others will be listed on the reverse of this form. In a joint venture, list only that portion of the work to be done by your company. If no work is contracted, show NONE

						Accumulated Totals
Earthwork						1,081,119.00
Portland Cement Concrete Paving						0.00
HMA Plant Mix						90,396.00
HMA Paving						62,834.00
Clean & Seal Cracks/Joints						0.00
Aggregate Bases & Surfaces						4,167,173.00
Hwy ,R.R. & Waterway Structures						0.00
Drainage						0.00
Electrical						0.00
Cover and Seal Coats						0.00
Concrete Construction						0.00
Landscaping						0.00
Fencing						0.00
Guardrail						0.00
Painting						0.00
Signing						0.00
Cold Milling, Planning & Rotomilling						0.00
Demolition						0.00
Pavement Markings (Paint)						0.00
Field Office						0.00
Traffic Control						0.00
Other Construction						0.00
Totals	0.00	0.00	0.00	0.00	0.00	5,401,322.00

Disclosure of this information is REQUIRED to accomplish the statutory purpose as outlined in the "Illinois Procurement Code". Failure to comply will result in non-issuance of an "Authorization To Bid." This form has been approved by the State Forms Management Center.

Part III. Work Subcontracted to Others

For each contract described in Part I, list all the work you have subcontracted to others.

	04-20-0007 1	04-20-0007 1	3	4	Awards Pending
Subcontractor	Maint Coat	Engel Electric			
Type of Work	Traffic Control/striping	Electric			
Subcontract Price	596,787.00	2,760.00			
Amount Uncompleted					
Subcontractor	Kujo	Arisaga			
Type of Work	Signage	Landscape			
Subcontract Price	735,689.00	189,102.85			
Amount Uncompleted	200,000.00				
Subcontractor	Ntrek Group	AC Pavement Stripe			
Type of Work	Excavation /Sewer /Concrete	Microsurface/Crack Seal			
Subcontract Price	367,607.36	692,389.24			
Amount Uncompleted					
Subcontractor	Protack LLC				
Type of Work	Joint Sealant				
Subcontract Price	63,834.60				
Amount Uncompleted					
Subcontractor	Schroeder Asphalt				
Type of Work	Rotomill				
Subcontract Price	78,000.00				
Amount Uncompleted					
Subcontractor	Industrial Fence				
Type of Work	Guardrail				
Subcontract Price	46,844.49				
Amount Uncompleted					
Subcontractor	Badger Daylight				
Type of Work	Sewer Clean				
Subcontract Price	117,602.00				
Amount Uncompleted	50,000.00				
Total Uncompleted	——→	250,000.00	0.00	0.00	0.00

I, being duly sworn, do hereby declare this affidavit is a true and correct statement relating to ALL uncompleted contracts of the undersigned for Federal, State, County, City and private work, including ALL subcontract work, ALL pending low bids not yet awarded or rejected and ALL estimated completion dates

Subscribed and sworn to before me

this 21st day of JANUARY, 2021

Jacqueline M Wallace
Notary Public

My commission expires: 8-28-24

(Notary Seal)

Type or Print Name: Michael Pachla, Vice President
Offices or Director — Title

Signed: Michael Pachla

Company: Curran Contracting Company

Address: 286 Memorial Court
Crystal Lake, IL 60014

OFFICIAL SEAL
JACQUELINE M WALLACE
NOTARY PUBLIC - STATE OF ILLINOIS
MY COMMISSION EXPIRES:08/28/24

Illinois Department of Transportation

Affidavit of Availability

For the Letting of 1/15/2021
(Letting date)

Instructions: Complete this form by either typing or using black ink. "Authorization to Bid" will not be issued unless both sides of this form are completed in detail. Use additional forms as needed to list all work.

Part I. Work Under Contract

List below all work you have under contract as either a prime contractor or a subcontractor. It is required to include all bending low bids not yet awarded or rejected. In a joint venture, list only that portion of work which is the responsibility of your company. The uncompleted dollar value is to be based upon the most recent engineer's or owners estimate, and must include work subcontracted to others. If no work is contracted, show NONE.

	1	2	3	4	Awards Pending	
County	Cook	Cook		Winnebago		
Contract Number	09-19-0083	I-16-4704		08-20-0149	:	
Contract With	Premier	ISTHA		Nteck Group		
Estimated Completion Date	6/30/2021	11/30/2022		8/31/2021		
Total Contract Price	2,212,160.00	49,249,248.00		$ 180,067.50		Accumulated Totals
Uncompleted Dollar Value if Firm is the Prime Contractor		49,191,180.76				49,191,180.76
Uncompleted Dollar Value if Firm is the Subcontractor	88,128.00			$ 159,056.38		497,184.38
				Total Value of All Work		49,688,363.12

Part II. Awards Pending and Uncompleted Work to be done with your own forces.

List below the uncompleted dollar value of work for each contract and award is pending to be completed with your own forces. All work subcontracted to others will be listed on the reverse of this form. In a joint venture, list only that portion of the work to be done by your company. If no work is contracted, show NONE

						Accumulated Totals
Earthwork	72,419.00	20,980,715.00				23,134,353.00
Portland Cement Concrete Paving						0.00
HMA Plant Mix						90,388.00
HMA Paving				$ 159,056.38		221,680.38
Clean & Seal Cracks/Joints						0.00
Aggregate Bases & Surfaces						4,167,173.00
Hwy ,R.R. & Waterway Structures						0.00
Drainage						0.00
Electrical						0.00
Cover and Seal Coats						0.00
Concrete Construction						0.00
Landscaping						0.00
Fencing						0.00
Guardrail						0.00
Painting						0.00
Signing						0.00
Cold Milling, Planning & Rotomilling						0.00
Demolition						0.00
Pavement Markings (Paint)						0.00
Field Office						0.00
Traffic Control						0.00
Other Construction						0.00
Totals	72,419.00	20,980,715.00	0.00	159,056.38	0.00	28,613,612.38

Disclosure of this information is REQUIRED to accomplish the statutory purpose as outlined in the "Illinois Procurement Code". Failure to comply will result in non-issuance of an "Authorization To Bid." This form has been approved by the State Forms Management Center.

Part III. Work Subcontracted to Others

For each contract described in Part I, list all the work you have subcontracted to others.

	09-19-0083 1	I-16-4704 2	I-16-4704 2	2	Awards Pending
Subcontractor	ABI Cons	ABI Cons	Mackie		
Type of Work	Concrete	Concrete	Surveying		
Subcontract Price	302,348.00	182,029.00	88,300.00		
Amount Uncompleted		182,029.00	88,300.00		
Subcontractor	Hall Elec	Alpine Const	Maint Coatings		
Type of Work	Traffic Signals	Demolition	Stripe/Traffic Con		
Subcontract Price	531,148.00	402,200.00	63,558.75		
Amount Uncompleted		350,000.00	63,558.75		
Subcontractor	KS Construction	Archon Constr.	RO Wagner		
Type of Work	Milling & Paving	Underground	Building		
Subcontract Price	417,860.00	5,654,173.85	5,059,300.00		
Amount Uncompleted		5,654,173.85	5,059,300.00		
Subcontractor	Maint Coatings	Clean Cut	Reizscape		
Type of Work	Striping	Tree Rem.	Landscaping		
Subcontract Price	19,471.00	29,095.00	1,213,851.88		
Amount Uncompleted	19,759.00	29,095.00	1,213,851.88		
Subcontractor	Wagner Land	Degan & Assoc.	Superior Constr.		
Type of Work	Landscaping	Enviromental	Structural Conc.		
Subcontract Price	38,000.00	29,850.00	12,405,123.10		
Amount Uncompleted	8,000.00	25,000.00	12,405,123.10		
Subcontractor	Work Zone	Industrial Fence	Torres Elect.		
Type of Work	Traffic Control	Fencing	Electrical		
Subcontract Price	40,210.00	289,535.61	957,048.31		
Amount Uncompleted		289,535.61	957,048.31		
Subcontractor		K-Five Constr.			
Type of Work		HMA Placement			
Subcontract Price		368,417.44			
Amount Uncompleted		368,417.44			
Total Uncompleted	18,759.00		27,210,483.78	0.00	0.00

I, being duly sworn, do hereby declare this affidavit is a true and correct statement relating to ALL uncompleted contracts of the undersigned for Federal, State, County, City and private work, including ALL subcontract work, ALL pending low bids not yet awarded or rejected and ALL estimated completion dates

Subscribed and sworn to before me
21st day of January 20 21

Jacqueline M Wallace
Notary Public

My commission expires: 8-28-24

(Notary Seal)

OFFICIAL SEAL
JACQUELINE M WALLACE
NOTARY PUBLIC - STATE OF ILLINOIS
MY COMMISSION EXPIRES:08/28/24

Type or Print Name: Michael Pachis, Vice President
Officer or Director — Title

Signed: Michael Pachis

Company: Curran Contracting Company
Address: 286 Memorial Court
Crystal Lake, IL 60014

Return With Bid

OPTION FOR FUEL COST ADJUSTMENT

The bidder shall submit this completed form with his/her bid. Failure to submit the form or properly complete contract number, company name, and sign and date the form shall make this contract exempt of fuel cost adjustments in all categories. Failure to indicate "Yes" for any category of work at the time of bid will make that category of work exempt from fuel cost adjustment. After award, this form, when submitted shall become part of the contract.

Contract No.: 20-00197-00-WR

Company Name: Curran Contracting Company

Contractor's Option:

Is your company opting to include this special provision as part of the contract plans for the following categories of work?

Category A Earthwork.	Yes	☐
Category B Subbases and Aggregate Base Courses	Yes	☐
Category C HMA Bases, Pavements and Shoulders	Yes	☐
Category D PCC Bases, Pavements and Shoulders	Yes	☐
Category E Structures	Yes	☐

Signature: _____ **Date:** August 30, 2021

Scott Hanson, Vice President

Illinois Department of Transportation

Check Sheet for Recurring Special Provisions

Local Public Agency	County	Section Number
City of DeKalb	DeKalb	20-00197-00-WR

The Following Recurring Special Provisions Indicated By An "X" Are Applicable To This Contract And Are Included By Reference:

Recurring Special Provisions

Check Sheet #			Page No.
1	☐	Additional State Requirements for Federal-Aid Construction Contracts	97
2	☐	Subletting of Contracts (Federal-Aid Contracts)	100
3	☐	EEO	101
4	☒	Specific EEO Responsibilities Non Federal-Aid Contracts	111
5	☒	Required Provisions - State Contracts	116
6	☐	Asbestos Bearing Pad Removal	122
7	☐	Asbestos Waterproofing Membrane and Asbestos HMA Surface Removal	123
8	☐	Temporary Stream Crossings and In-Stream Work Pads	124
9	☐	Construction Layout Stakes Except for Bridges	125
10	☐	Construction Layout Stakes	128
11	☐	Use of Geotextile Fabric for Railroad Crossing	131
12	☐	Subsealing of Concrete Pavements	133
13	☐	Hot-Mix Asphalt Surface Correction	137
14	☒	Pavement and Shoulder Resurfacing	139
15	☐	Patching with Hot-Mix Asphalt Overlay Removal	140
16	☐	Polymer Concrete	142
17	☐	PVC Pipeliner	144
18	☐	Bicycle Racks	145
19	☐	Temporary Portable Bridge Traffic Signals	147
20		**Reserved**	149
21	☐	Nighttime Inspection of Roadway Lighting	150
22	☐	English Substitution of Metric Bolts	151
23	☐	Calcium Chloride Accelerator for Portland Cement Concrete	152
24	☐	Quality Control of Concrete Mixtures at the Plant	153
25	☒	Quality Control/Quality Assurance of Concrete Mixtures	161
26	☐	Digital Terrain Modeling for Earthwork Calculations	177
27		**Reserved**	179
28	☐	Preventive Maintenance - Bituminous Surface Treatment (A-1)	180
29		**Reserved**	186
30		**Reserved**	187
31		**Reserved**	188
32	☐	Temporary Raised Pavement Markers	189
33	☐	Restoring Bridge Approach Pavements Using High-Density Foam	190
34	☐	Portland Cement Concrete Inlay or Overlay	193
35	☐	Portland Cement Concrete Partial Depth Hot-Mix Asphalt Patching	197
36	☐	Longitudinal Joint and Crack Patching	200
37	☐	Concrete Mix Design - Department Provided	202

Local Public Agency	County	Section Number
City of DeKalb	DeKalb	20-00197-00-WR

The Following Local Roads And Streets Recurring Special Provisions Indicated By An "X" Are Applicable To This Contract And Are Included By Reference:

Local Roads And Streets Recurring Special Provisions

Check Sheet #			Page No.
LRS 1		**Reserved**	204
LRS 2	☐	Furnished Excavation	205
LRS 3	☒	Work Zone Traffic Control Surveillance	206
LRS 4	☐	Flaggers in Work Zones	207
LRS 5	☒	Contract Claims	208
LRS 6	☒	Bidding Requirements and Conditions for Contract Proposals	209
LRS 7	☐	Bidding Requirements and Conditions for Material Proposals	215
LRS 8		**Reserved**	221
LRS 9	☐	Bituminous Surface Treatments	222
LRS 10		**Reserved**	223
LRS 11	☒	Employment Practices	224
LRS 12	☒	Wages of Employees on Public Works	226
LRS 13	☒	Selection of Labor	228
LRS 14	☐	Paving Brick and Concrete Paver Pavements and Sidewalks	229
LRS 15	☒	Partial Payments	232
LRS 16	☒	Protests on Local Lettings	233
LRS 17	☒	Substance Abuse Prevention Program	234
LRS 18	☐	Multigrade Cold Mix Asphalt	235

Index of Special Provisions

Traffic Signal Special Provisions ..... 2-1 to 2-27

Bureau of Design and Environment (BDE) Special Provisions ..... 3-1 to 3-75

Local Roads and Streets (LR) Special Provisions ..... 4-1 to 4-9

District 3 Special Provisions ..... 5-1 to 5-12

Project Specific Special Provisions ..... 6-1 to 6-11

Illinois Department of Transportation

Certificate of Eligibility

Contractor No 1305

Curran Contracting Company
286 Memorial Court Crystal Lake, IL 60014

WHO HAS FILED WITH THE DEPARTMENT AN APPLICATION FOR PREQUALIFICATION STATEMENT OF EXPERIENCE, EQUIPMENT AND FINANCIAL CONDITION IS HEREBY QUALIFIED TO BID AT ANY OF DEPARTMENT OF TRANSPORTATION LETTINGS IN THE CLASSES OF WORK AND WITHIN THE AMOUNT AND OTHER LIMITATIONS OF EACH CLASSIFICATION, AS LISTED BELOW, FOR SUCH PERIOD AS THE UNCOMPLETED WORK FROM ALL SOURCES DOES NOT EXCEED SUPER UNLIMITED

001	EARTHWORK	$49,075,000
003	HMA PLANT MIX	Unlimited
012	DRAINAGE	$3,650,000
017	CONCRETE CONSTRUCTION	$5,700,000
032	COLD MILL,PLAN. & ROTOMILL	$7,550,000
08A	AGGREGATE BASES & SURF. (A)	$6,700,000

THIS CERTIFICATE OF ELIGIBILITY IS VALID FROM 3/30/2021 TO 4/30/2022 INCLUSIVE, AND SUPERSEDES ANY CERTIFICATE PREVIOUSLY ISSUED, BUT IS SUBJECT TO REVISION OR REVOCATION, IF AND WHEN CHANGES IN THE FINANCIAL CONDITION OF THE CONTRACTING FIRM OR OTHER FACTS JUSTIFY SUCH REVISIONS OR REVOCATION.
ISSUED AT SPRINGFIELD, ILLINOIS ON 3/30/2021.

Tim Kell
Engineer of Construction

IL 494-0645

CERTIFICATE OF LIABILITY INSURANCE

DATE (MM/DD/YYYY): 10/5/2020

THIS CERTIFICATE IS ISSUED AS A MATTER OF INFORMATION ONLY AND CONFERS NO RIGHTS UPON THE CERTIFICATE HOLDER. THIS CERTIFICATE DOES NOT AFFIRMATIVELY OR NEGATIVELY AMEND, EXTEND OR ALTER THE COVERAGE AFFORDED BY THE POLICIES BELOW. THIS CERTIFICATE OF INSURANCE DOES NOT CONSTITUTE A CONTRACT BETWEEN THE ISSUING INSURER(S), AUTHORIZED REPRESENTATIVE OR PRODUCER, AND THE CERTIFICATE HOLDER.

IMPORTANT: If the certificate holder is an ADDITIONAL INSURED, the policy(ies) must be endorsed. If SUBROGATION IS WAIVED, subject to the terms and conditions of the policy, certain policies may require an endorsement. A statement on this certificate does not confer rights to the certificate holder in lieu of such endorsement(s).

PRODUCER
The Horton Group
10320 Orland Parkway
Orland Park IL 60467

CONTACT NAME: Certificates Team
PHONE (A/C, No, Ext): 708-845-3917 FAX (A/C, No): 708-845-3001
E-MAIL ADDRESS: constructioncerts@thehortongroup.com

INSURER(S) AFFORDING COVERAGE	NAIC #
INSURER A : Berkley Assurance Company	39462
INSURER B : Arch Insurance Company	11150
INSURER C : The Travelers Property Casualty Insurance Company	25674
INSURER D : National Fire & Marine Insurance Company	20079
INSURER E :	
INSURER F :	

INSURED CURRA-3
Curran Contracting Company
286 Memorial Court
Crystal Lake IL 60014

COVERAGES CERTIFICATE NUMBER: 67874015 REVISION NUMBER:

THIS IS TO CERTIFY THAT THE POLICIES OF INSURANCE LISTED BELOW HAVE BEEN ISSUED TO THE INSURED NAMED ABOVE FOR THE POLICY PERIOD INDICATED. NOTWITHSTANDING ANY REQUIREMENT, TERM OR CONDITION OF ANY CONTRACT OR OTHER DOCUMENT WITH RESPECT TO WHICH THIS CERTIFICATE MAY BE ISSUED OR MAY PERTAIN, THE INSURANCE AFFORDED BY THE POLICIES DESCRIBED HEREIN IS SUBJECT TO ALL THE TERMS, EXCLUSIONS AND CONDITIONS OF SUCH POLICIES. LIMITS SHOWN MAY HAVE BEEN REDUCED BY PAID CLAIMS.

INSR LTR	TYPE OF INSURANCE	ADDL INSR	SUBR WVD	POLICY NUMBER	POLICY EFF (MM/DD/YYYY)	POLICY EXP (MM/DD/YYYY)	LIMITS	
B	GENERAL LIABILITY	Y	Y	41PKG89536	10/1/2020	10/1/2021	EACH OCCURRENCE	$ 5,000,000
	X COMMERCIAL GENERAL LIABILITY						DAMAGE TO RENTED PREMISES (Ea occurrence)	$ 1,000,000
	CLAIMS-MADE X OCCUR						MED EXP (Any one person)	$ 5,000
							PERSONAL & ADV INJURY	$ 5,000,000
							GENERAL AGGREGATE	$ 5,000,000
	GEN'L AGGREGATE LIMIT APPLIES PER:						PRODUCTS - COMP/OP AGG	$ 5,000,000
	POLICY X PRO-JECT X LOC							$
B	AUTOMOBILE LIABILITY	Y	Y	41PKG89536	10/1/2020	10/1/2021	COMBINED SINGLE LIMIT (Ea accident)	$ 5,000,000
	X ANY AUTO						BODILY INJURY (Per person)	$
	ALL OWNED AUTOS / SCHEDULED AUTOS						BODILY INJURY (Per accident)	$
	X HIRED AUTOS / X NON-OWNED AUTOS						PROPERTY DAMAGE (Per accident)	$
								$
D	UMBRELLA LIAB X OCCUR	Y	Y	42-UMO-308949-02	10/1/2020	10/1/2021	EACH OCCURRENCE	$ 5,000,000
	X EXCESS LIAB CLAIMS-MADE						AGGREGATE	$ 5,000,000
	DED X RETENTION $ 25,000							$
B B	WORKERS COMPENSATION AND EMPLOYERS' LIABILITY		Y	41WCI89534 - AOS 44WCI89535 - CA, DC, IL, IN, KY, MD, MN MO, OR, TX	10/1/2020 10/1/2020	10/1/2021 10/1/2021	X WC STATU-TORY LIMITS / OTH-ER	
	ANY PROPRIETOR/PARTNER/EXECUTIVE OFFICER/MEMBER EXCLUDED? (Mandatory in NH) Y/N N	N/A					E.L. EACH ACCIDENT	$ 1,000,000
	If yes, describe under DESCRIPTION OF OPERATIONS below						E.L. DISEASE - EA EMPLOYEE	$ 1,000,000
							E.L. DISEASE - POLICY LIMIT	$ 1,000,000
C A	Leased & Rented Equipment Pollution/Professional			QT6600P879384 PCAB-5012623-1020	10/1/2020 10/1/2020	10/1/2021 10/1/2021	Limit Limit	500,000 5,000,000

DESCRIPTION OF OPERATIONS / LOCATIONS / VEHICLES (Attach ACORD 101, Additional Remarks Schedule, if more space is required)
The coverage and limits conform to the minimums required by Article 107.27 of the Standard Specifications for Road and Bridge Construction. Additional insured on a primary non contributory basis with respect to general liability and auto liability only when required by written contract. Waiver of subrogation in favor of the additional insureds will apply to general liability, auto liability and workers compensation where permitted by law and only when required by written contract. Excess follows form.

CERTIFICATE HOLDER

Proof of Insurance

CANCELLATION

SHOULD ANY OF THE ABOVE DESCRIBED POLICIES BE CANCELLED BEFORE THE EXPIRATION DATE THEREOF, NOTICE WILL BE DELIVERED IN ACCORDANCE WITH THE POLICY PROVISIONS.

AUTHORIZED REPRESENTATIVE

© 1988-2010 ACORD CORPORATION. All rights reserved.

The ACORD name and logo are registered marks of ACORD

Form **W-9**
(Rev. October 2018)
Department of the Treasury
Internal Revenue Service

Request for Taxpayer Identification Number and Certification

▶ Go to *www.irs.gov/FormW9* for instructions and the latest information.

Give Form to the requester. Do not send to the IRS.

Print or type. See Specific Instructions on page 3.

1 Name (as shown on your income tax return). Name is required on this line; do not leave this line blank.
Curran Contracting Company

2 Business name/disregarded entity name, if different from above

3 Check appropriate box for federal tax classification of the person whose name is entered on line 1. Check only one of the following seven boxes.

☐ Individual/sole proprietor or single-member LLC ☑ C Corporation ☐ S Corporation ☐ Partnership ☐ Trust/estate

☐ Limited liability company. Enter the tax classification (C=C corporation, S=S corporation, P=Partnership) ▶

Note: Check the appropriate box in the line above for the tax classification of the single-member owner. Do not check LLC if the LLC is classified as a single-member LLC that is disregarded from the owner unless the owner of the LLC is another LLC that is not disregarded from the owner for U.S. federal tax purposes. Otherwise, a single-member LLC that is disregarded from the owner should check the appropriate box for the tax classification of its owner.

☐ Other (see instructions) ▶

4 Exemptions (codes apply only to certain entities, not individuals; see instructions on page 3):

Exempt payee code (if any) 5

Exemption from FATCA reporting code (if any)

(Applies to accounts maintained outside the U.S.)

5 Address (number, street, and apt. or suite no.) See instructions.
286 Memorial Court

Requester's name and address (optional)

6 City, state, and ZIP code
Crystal Lake IL 60014

7 List account number(s) here (optional)

Part I Taxpayer Identification Number (TIN)

Enter your TIN in the appropriate box. The TIN provided must match the name given on line 1 to avoid backup withholding. For individuals, this is generally your social security number (SSN). However, for a resident alien, sole proprietor, or disregarded entity, see the instructions for Part I, later. For other entities, it is your employer identification number (EIN). If you do not have a number, see *How to get a TIN*, later.

Note: If the account is in more than one name, see the instructions for line 1. Also see *What Name and Number To Give the Requester* for guidelines on whose number to enter.

Social security number
☐☐☐ - ☐☐ - ☐☐☐☐

or

Employer identification number
3 6 - 3 5 0 6 1 1 9

Part II Certification

Under penalties of perjury, I certify that:

1. The number shown on this form is my correct taxpayer identification number (or I am waiting for a number to be issued to me); and
2. I am not subject to backup withholding because: (a) I am exempt from backup withholding, or (b) I have not been notified by the Internal Revenue Service (IRS) that I am subject to backup withholding as a result of a failure to report all interest or dividends, or (c) the IRS has notified me that I am no longer subject to backup withholding; and
3. I am a U.S. citizen or other U.S. person (defined below); and
4. The FATCA code(s) entered on this form (if any) indicating that I am exempt from FATCA reporting is correct.

Certification instructions. You must cross out item 2 above if you have been notified by the IRS that you are currently subject to backup withholding because you have failed to report all interest and dividends on your tax return. For real estate transactions, item 2 does not apply. For mortgage interest paid, acquisition or abandonment of secured property, cancellation of debt, contributions to an individual retirement arrangement (IRA), and generally, payments other than interest and dividends, you are not required to sign the certification, but you must provide your correct TIN. See the instructions for Part II, later.

Sign Here Signature of U.S. person ▶ Date ▶ 1/1/2021

General Instructions

Section references are to the Internal Revenue Code unless otherwise noted.

Future developments. For the latest information about developments related to Form W-9 and its instructions, such as legislation enacted after they were published, go to *www.irs.gov/FormW9.*

Purpose of Form

An individual or entity (Form W-9 requester) who is required to file an information return with the IRS must obtain your correct taxpayer identification number (TIN) which may be your social security number (SSN), individual taxpayer identification number (ITIN), adoption taxpayer identification number (ATIN), or employer identification number (EIN), to report on an information return the amount paid to you, or other amount reportable on an information return. Examples of information returns include, but are not limited to, the following.

- Form 1099-INT (interest earned or paid)
- Form 1099-DIV (dividends, including those from stocks or mutual funds)
- Form 1099-MISC (various types of income, prizes, awards, or gross proceeds)
- Form 1099-B (stock or mutual fund sales and certain other transactions by brokers)
- Form 1099-S (proceeds from real estate transactions)
- Form 1099-K (merchant card and third party network transactions)
- Form 1098 (home mortgage interest), 1098-E (student loan interest), 1098-T (tuition)
- Form 1099-C (canceled debt)
- Form 1099-A (acquisition or abandonment of secured property)

Use Form W-9 only if you are a U.S. person (including a resident alien), to provide your correct TIN.

If you do not return Form W-9 to the requester with a TIN, you might be subject to backup withholding. See What is backup withholding, *later.*

Certificate of Registration

STATE BOARD OF ELECTIONS

Registration No. 11205

Curran Contracting Company

286 Memorial Court

Crystal Lake IL 60014

Information for this business last updated on:

Friday, February 16, 2018

Certificate produced on Friday, February 16, 2018 at 1:29 PM

Registered Business

File Number 5461-730-5

To all to whom these Presents Shall Come, Greeting:

I, Jesse White, Secretary of State of the State of Illinois, do hereby certify that I am the keeper of the records of the Department of Business Services. I certify that

CURRAN CONTRACTING COMPANY, A DOMESTIC CORPORATION, INCORPORATED UNDER THE LAWS OF THIS STATE ON APRIL 06, 1987, APPEARS TO HAVE COMPLIED WITH ALL THE PROVISIONS OF THE BUSINESS CORPORATION ACT OF THIS STATE, AND AS OF THIS DATE, IS IN GOOD STANDING AS A DOMESTIC CORPORATION IN THE STATE OF ILLINOIS.

In Testimony Whereof, *I hereto set my hand and cause to be affixed the Great Seal of the State of Illinois, this* 9TH *day of* JANUARY *A.D.* 2020 .

Authentication #: 2000902476 verifiable until 01/09/2021
Authenticate at: http://www.cyberdriveillinois.com

Jesse White

SECRETARY OF STATE

UNANIMOUS WRITTEN CONSENT OF THE
BOARD OF DIRECTORS OF
CURRAN CONTRACTING COMPANY
(IN LIEU OF SPECIAL MEETING)

The undersigned, being all of the Directors of CURRAN CONTRACTING COMPANY, an Illinois Corporation (the "Corporation"), acting pursuant to the by-laws of the Corporation and Section 7.20 of the Illinois Business Corporation Act, do consent to the taking of the following actions, in lieu of holding a Special Meeting of the Board of Directors, and waive any notice required to be given in connection with such meeting and do approve and adopt the following resolution:

> RESOLVED, that Michael Leopardo, Nicklas Schram, Michael Pachla, and Jeffrey Pennino are each individually authorized to execute and bind this Corporation to all bids, proposals, contracts, and agreements for all construction projects to be performed by the Corporation on behalf of any public or private contracting entity, and that Barbara Bensinger, Natalia Larson, and Kim Bolanowski are each individually authorized to attest as Assistant Secretaries to the signatures of Michael Leopardo, Nicklas Schram, Michael Pachla, and Jeffrey Pennino.

IN WITNESS WHEREOF, the undersigned have executed this Consent and directed that it be placed with the records of the Board of Directors of the Corporation this 5th day of October, 2020.

Timothy J. Curran

Michael J. Curran

Catherine C. Curran

Being all of the Directors
of said Corporation.

Dekalb Public Works
Utilities Division Revenues and Expenditures
Water Capital Fund - 62

0.00

		FY2020	FY 2020 Actual	FY2021	FY 2021 Actual	FY2022	FY2023
620-00-00-34800	*WATER SALES 2/3 of water rate increase designated to Capital*	$600,000	$602,510	$600,000	$449,139	$600,000	$600,000
620-00-00-37100	*INVESTMENT INTEREST*	$1,200	$712	$1,000	$262	$1,000	$1,000
620-00-00-39280	TRANSFER FROM CDBG	$0	$0	$0		$0	$0
620-00-00-39600	TRANSFER FROM WATER FUND	$1,450,000	$1,329,163	$2,492,290	$1,453,837	$2,575,795	$1,442,490
TOTAL TRANSFERS IN		**$2,051,200**	**$1,932,385**	**$3,093,290**	**$1,903,238**	**$3,176,795**	**$2,043,490**
TOTAL WATER CAPITAL FUND (62) REVENUES		**$2,051,200**	**$1,932,385**	**$3,093,290**	**$1,903,238**	**$3,176,795**	**$2,043,490**
620-00-00-40002	LEASED VEHICLES AND EQUIPMENT		$10,160	$82,269		$64,290	$64,290
620-00-00-85000	WATER MAINS	$0		$855,228		$1,900,000	$500,000
620-00-00-85100	WATER METERS	$50,000	$32,868	$80,000	$44,172	$50,000	$50,000
620-00-00-85500	WATER SYSTEMS IMPROVEMENTS	$980,000	$193,994	$1,451,111		$240,000	$365,000
620-00-00-86000	EQUIPMENT	$215,000	$13,600	$63,638		$42,200	$0
620-00-00-86100	TECHNOLOGY EQUIPMENT	$25,000	$18,095	$10,000		$75,000	$425,000
620-00-00-87000	VEHICLES	$330,000	$176,891	$0		$204,305	$38,200
620-00-00-91600	TRANSFER TO THE WATER FUND						
TOTAL WATER CAPITAL FUND (62) EXPENDITURES		**$1,600,000**	**$445,608**	**$2,542,246**	**$44,172**	**$2,575,795**	**$1,442,490**
NET FUND TOTALS - SURPLUS / (DEFICIT)		$451,200	$1,486,777	$551,044	$1,859,066	$601,000	$601,000

Illinois Department of Transportation

Check Sheet for Recurring Special Provisions

Local Public Agency	County	Section Number
City of DeKalb	DeKalb	20-00197-00-WR

The Following Recurring Special Provisions Indicated By An "X" Are Applicable To This Contract And Are Included By Reference:

Recurring Special Provisions

Check Sheet #			Page No.
1	☐	Additional State Requirements for Federal-Aid Construction Contracts	97
2	☐	Subletting of Contracts (Federal-Aid Contracts)	100
3	☐	EEO	101
4	☒	Specific EEO Responsibilities Non Federal-Aid Contracts	111
5	☒	Required Provisions - State Contracts	116
6	☐	Asbestos Bearing Pad Removal	122
7	☐	Asbestos Waterproofing Membrane and Asbestos HMA Surface Removal	123
8	☐	Temporary Stream Crossings and In-Stream Work Pads	124
9	☐	Construction Layout Stakes Except for Bridges	125
10	☐	Construction Layout Stakes	128
11	☐	Use of Geotextile Fabric for Railroad Crossing	131
12	☐	Subsealing of Concrete Pavements	133
13	☐	Hot-Mix Asphalt Surface Correction	137
14	☒	Pavement and Shoulder Resurfacing	139
15	☐	Patching with Hot-Mix Asphalt Overlay Removal	140
16	☐	Polymer Concrete	142
17	☐	PVC Pipeliner	144
18	☐	Bicycle Racks	145
19	☐	Temporary Portable Bridge Traffic Signals	147
20		**Reserved**	149
21	☐	Nighttime Inspection of Roadway Lighting	150
22	☐	English Substitution of Metric Bolts	151
23	☐	Calcium Chloride Accelerator for Portland Cement Concrete	152
24	☐	Quality Control of Concrete Mixtures at the Plant	153
25	☒	Quality Control/Quality Assurance of Concrete Mixtures	161
26	☐	Digital Terrain Modeling for Earthwork Calculations	177
27		**Reserved**	179
28	☐	Preventive Maintenance - Bituminous Surface Treatment (A-1)	180
29		**Reserved**	186
30		**Reserved**	187
31		**Reserved**	188
32	☐	Temporary Raised Pavement Markers	189
33	☐	Restoring Bridge Approach Pavements Using High-Density Foam	190
34	☐	Portland Cement Concrete Inlay or Overlay	193
35	☐	Portland Cement Concrete Partial Depth Hot-Mix Asphalt Patching	197
36	☐	Longitudinal Joint and Crack Patching	200
37	☐	Concrete Mix Design - Department Provided	202

Local Public Agency	County	Section Number
City of DeKalb	DeKalb	20-00197-00-WR

The Following Local Roads And Streets Recurring Special Provisions Indicated By An "X" Are Applicable To This Contract And Are Included By Reference:

Local Roads And Streets Recurring Special Provisions

Check Sheet #			Page No.
LRS 1		**Reserved**	204
LRS 2	☐	Furnished Excavation	205
LRS 3	☒	Work Zone Traffic Control Surveillance	206
LRS 4	☐	Flaggers in Work Zones	207
LRS 5	☒	Contract Claims	208
LRS 6	☒	Bidding Requirements and Conditions for Contract Proposals	209
LRS 7	☐	Bidding Requirements and Conditions for Material Proposals	215
LRS 8		**Reserved**	221
LRS 9	☐	Bituminous Surface Treatments	222
LRS 10		**Reserved**	223
LRS 11	☒	Employment Practices	224
LRS 12	☒	Wages of Employees on Public Works	226
LRS 13	☒	Selection of Labor	228
LRS 14	☐	Paving Brick and Concrete Paver Pavements and Sidewalks	229
LRS 15	☒	Partial Payments	232
LRS 16	☒	Protests on Local Lettings	233
LRS 17	☒	Substance Abuse Prevention Program	234
LRS 18	☐	Multigrade Cold Mix Asphalt	235

Index of Special Provisions

Traffic Signal Special Provisions ..... 2-1 to 2-27

Bureau of Design and Environment (BDE) Special Provisions ..... 3-1 to 3-75

Local Roads and Streets (LR) Special Provisions ..... 4-1 to 4-9

District 3 Special Provisions ..... 5-1 to 5-12

Project Specific Special Provisions ..... 6-1 to 6-11

Traffic Signal Specifications

IL Route 23 and Gurler Road

DeKalb, Illinois

Prepared by

Kimley»Horn

08/13/2021

TABLE OF CONTENTS

LOCATION OF PROJECT 2

DESCRIPTION OF PROJECT 2

LUMINAIRES, LED (BDE) 3

RESTORATION OF WORK AREA 10

SERVICE INSTALLATION, GROUND MOUNTED 10

DOUBLE HANDHOLE OR HANDHOLE, PORTLAND CEMENT CONCRETE 12

COMBINATION LIGHTING CONTROLLER 15

UNINTERRUPTIBLE POWER SUPPLY, EXTENDED 15

PEDESTRIAN SIGNAL HEAD AND SIGNAL HEAD, POLYCARBONATE, LED, 1-FACE, MAST ARM OR BRACKET MOUNTED, 3-SECTION OR 5-SECTION OR PEDESTRIAN SIGNAL HEADS. 15

TRAFFIC SIGNAL BACKPLATE, LOUVERED, FORMED PLASTIC SPECIAL 16

VIDEO VEHICLE DETECTION SYSTEM, SPECIAL 16

REMOTE-CONTROLLED VIDEO SYSTEM 26

PERMANENT TRAFFIC SIGNAL TIMINGS 27

STATE OF ILLINOIS

SPECIAL PROVISIONS

The following Special Provisions supplement the "Standard Specifications for Road and Bridge Construction, Adopted April 1, 2016", the latest edition of the "Manual on Uniform Traffic Control Devices for Streets and Highways", and the "Manual of Test Procedures for Materials" in effect on the date of invitation for bids, and the "Supplemental Specifications and Recurring Special Provisions", which apply to and govern the construction of IL Route 23, in DeKalb County, and in case of conflict with any part, or parts, of said Specifications, the said Special Provisions shall take precedence and shall govern.

Job No. C-93-105-21

LOCATION OF PROJECT

The project is located at the intersection of IL Route 23 and Gurler Road in DeKalb, Illinois.

DESCRIPTION OF PROJECT

The purpose of the project is to install a traffic signal at the intersection of IL Route 23 and Gurler Road to accommodate increased traffic volumes and additional turn lanes. The work required for this project is for a traffic signal installation and includes concrete foundations, traffic signal posts, combination mast arm assembly and poles, handholes, detector loops, and other work pertinent to complete the project.

LUMINAIRES, LED (BDE)
(Effective April 1, 2019)

Description. This work shall consist of furnishing and installing light emitting diode (LED) luminaires. Work shall be according to Sections 801, 821, and 1067 of the Standard Specifications, except as modified herein.

Submittals. In addition to the requirements listed in Article 801.05(a), submittals for LED luminaires shall include the following.

- Completed manufacturer's luminaire ordering form with the full catalog number provided.
- Descriptive literature and catalog cuts for the luminaire, driver, and surge protective device.
- Lighting calculations generated with AGi32 software demonstrating compliance with the Luminaire Performance Table shown in the contract. These calculations shall be performed to the following criteria: photopic units shall be used; calculations shall be performed to an accuracy of two digits (x.xx cd/m2); point-by-point illuminance, luminance, and veiling luminance ratios demonstrating that the submitted luminaire meets the lighting metrics specified in the Luminaire Performance Table using IES RP-8 methods.

Upon request by the Engineer, submittals for LED Luminaires shall also include any or all the following.

- IES file associated with each submitted luminaire in IES LM-63 format.
- TM-21 calculator spreadsheet (XLSX or PDF format) and if available, TM-28 report for the specified luminaire or luminaire family. Both reports shall be for 50,000 hours at an ambient temperature of 77 °F (25 °C).
- LM-79 report with National Voluntary Laboratory Accreditation Program (NVLAP) current at the time of testing in PDF format inclusive of the following: isofootcandle diagram with half candela contour and maximum candela point; polar plots through maximum plane and maximum cone; coefficient of utilization graph; candela table; and spectral distribution graph and chromaticity diagram.
- LM-80 report for the specified LED package in PDF format and if available, LM-84 report for the specified luminaire or luminaire family in PDF format. Both reports shall be conducted by a laboratory with NVLAP certification current at the time of testing.
- In Situ Temperature Measurement Test (ISTMT) report for the specified luminaire or luminaire family in PDF format.
- Vibration test report in accordance with ANSI C136.31 in PDF format.
- ASTM 8117/ASTM D1654 (neutral salt spray) test and sample evaluation report in PDF format.
- ASTM G154 (ASTM D523) gloss test report in PDF format.
- LED drive current, total luminaire input wattage, and current over the operating voltage range at an ambient temperature of 77 °F (25 °C).
- Power factor (pf) and total harmonic distortion (THD) at maximum and minimum supply and at nominal voltage for the dimmed states of 70%, 50%, and 30% full power.
- Ingress protection (IP) test reports, conducted according to ANSI C136.25 requirements, for the driver and optical assembly in PDF format.
- Installation, maintenance, and cleaning instructions in PDF format, including recommendations on periodic cleaning methods.
- Documentation in PDF format that the reporting laboratory is certified to perform the required tests.

Warranty. Replace the last sentence of Article 801.14(a) with the following.

"The warranty, including the maintained minimum luminance, for LED signal head modules, optically programmed LED signal head modules, and LED pedestrian signal head modules shall cover a minimum of 60 months from the date of delivery. The warranty for LED roadway luminaires, LED highmast luminaires, LED underpass luminaires, LED sign lighting luminaires, LED obstruction warning luminaires, and all of their components shall cover a minimum of ten years from the date of delivery."

Roadway Luminaires. Revise Article 821.02(d) to read.

"(d) Light Source ..... 1067.06"

Revise the third paragraph of Article 821.03 to read.

"Each luminaire driver and/or driver arrangement shall be checked to assure compatibility with the project power supply. When the luminaire driver has a readily accessible electrical compartment, the driver shall be attached so as to be easily removed for maintenance."

Replace the fifth paragraph of Article 821.03 with the following.

"No luminaire shall be installed before it is approved. When independent luminaire testing is required, full approval will not be given until complete test results which demonstrate compliance with the contract documents have been reviewed and accepted by the Engineer. Independent luminaire testing will be required, and shall be conducted, according to Article 1067 .01 (k)".

Revise the last paragraph of Article 821.03 to read.

"When installing or adjusting the luminaire, care shall be taken to avoid touching the lenses or allowing contaminants to be deposited on any part of the optical assembly. Each lens shall be free of all dirt, smudges, etc. Should the luminaire require cleaning, the luminaire manufacturer's cleaning instructions shall be strictly followed."

Revise Article 821.08 to read.

"821.08 Basis of Payment. This work will be paid for at the contract unit price per each for LUMINAIRE, LED, ROADWAY, of the output designation specified; LUMINAIRE, LED, HIGHMAST, of the output designation specified; LUMINAIRE, LED, UNDERPASS, WALLMOUNT, of the output designation specified; LUMINAIRE, LED, UNDERPASS, SUSPENDED, of the output designation specified; LUMINAIRE, LED, SIGN LIGHTING, of the output designation specified.

When independent luminaire testing is required, the work will be paid for at the contract lump sum price for INDEPENDENT LUMINAIRE TESTING."

Luminaires. Revise Articles 1067.01 through 1067.06 to read.

"1067.01 General. The luminaire shall be mechanically strong and easy to maintain. The size, weight, and shape of the luminaire shall be designed so as not to incite detrimental vibrations in its respective pole and it shall be compatible with the pole and arm. All electrical and electronic components of the luminaire shall comply with the requirements of Restriction of Hazardous

Materials (RoHS) regulations. The luminaire shall be listed for wet locations by an NRTL and shall meet the requirements of UL 1598 and UL 8750.

(a) Labels. An internal label shall be provided indicating the luminaire is suitable for wet locations and indicating the luminaire is an NRTL listed product to UL 1598 and UL8750. The internal label shall also comply with the requirements of ANSI C136.22.

An external label consisting of two black characters on a white background with the dimensions of the label and the characters as specified in ANSI C136.15 for HPS luminaires. The first character shall be the alphabetical character representing the initial lumen output as specified in Table 1 of Article 1067.06(c). The second character shall be the numerical character representing the transverse light distribution type as specified in IES RP-8 (i.e. Types 1, 2, 3, 4, or 5).

(b) Surge Protection. The luminaire shall comply the requirements of ANSI C136.2 for electrical transient immunity at the "Extreme" level (20KV/1 OKA) and shall be equipped with a surge protective device (SPD) that is UL 1449 compliant with indicator light. An SPD failure shall open the circuit to protect the driver.

(c) Optical Assembly. The optical assembly shall have an IP66 or higher rating in accordance with ANSI C136.25. The circuiting of the LED array shall be designed to minimize the effect of individual LED failures on the operation of other LEDs. All optical components shall be made of glass or a UV stabilized, non-yellowing material.

(d) Housing. All external surfaces shall be cleaned in accordance with the manufacturer's recommendations and be constructed in such a way as to discourage the accumulation of water, ice, and debris.

(e) Driver. The driver shall be integral to the luminaire and shall be capable of receiving indefinite open and short circuit output conditions without damage.

The driver shall incorporate the use of thermal foldback circuitry to reduce output current under abnormal driver case temperature conditions and shall be rated for a lifetime of 100,000 hours at an ambient temperature exposure of 77 °F (25 °C) to the luminaire. If the driver has a thermal shut down feature, it shall not turn off the LEDs when operated at 104 °F (40 °C) or less.

The driver shall have an input voltage range of 120 to 277 volts (± 10%) or 34 7 to 480 volts (± 10%) according to the contract documents. When the driver is operating within the rated input voltage range and in an un-dimmed state, the power factor measurement shall be not less than 0.9 and the THD measurement shall be no greater than 20%.

The driver shall meet the requirements of the FCC Rules and Regulations, Title 47, Part 15 for Class A devices with regard to electromagnetic compatibility. This shall be confirmed through the testing methods in accordance with ANSI C63.4 for electromagnetic interference.

The driver shall be dimmable using the protocol listed in the Luminaire Performance Table shown in the contract.

(f) Photometric Performance. The luminaire shall be IES LM-79 tested by a laboratory holding accreditation from the NVLAP for IES LM-79 testing procedures. At a minimum the LM-79

report shall include a backlight/uplight/glare (BUG) rating and a luminaire classification system (LCS) graph showing lumen values and percent lumens by zone as described in IES RP-8. The uplight of the BUG rating shall be U=0.

The luminaire shall also meet the requirements of the Luminaire Performance Table shown in the contract.

(g) Finish. The luminaire shall have a baked acrylic enamel finish. The color of the finish shall be gray, bronze, or black to match the pole or tower on which the luminaire is mounted.

The finish shall have a rating of six or greater according to ASTM D1654, Section 8.0 Procedure A - Evaluation of Rust Creepage for Scribed Samples after exposure to 1000 hours of testing according to ASTM B 117 for painted or finished surfaces under environmental exposure.

The luminaire finish shall have less than or equal to 30% reduction of gloss according to ASTM D523 after exposure of 500 hours to ASTM G154 Cycle 6 QUV® accelerated weathering testing.

(h) Hardware. All hardware shall be stainless steel or of other corrosion resistant material approved by the Engineer.

Luminaires shall be designed to be easily serviced, having fasteners such as quarter-turn clips of the heavy spring-loaded type with large, deep straight slot heads, complete with a receptacle and shall be according to military specification MIL-f-5591.

All hardware shall be captive and not susceptible to falling from the luminaire during maintenance operations. This shall include lens/lens frame fasteners as well hardware holding the removable driver and electronic components in place.

(i) Vibration Testing. All luminaires shall be subjected to and pass vibration testing requirements at "3G" minimum zero to peak acceleration in accordance with ANSI C136.31 requirements using the same luminaire. To be accepted, the luminaire housing, hardware, and each individual component shall pass this test with no noticeable damage and the luminaire must remain fully operational after testing.

(j) Wiring. All wiring in the luminaire shall be rated for operation at 600V, 221 °F (105 °C).

(k) Independent Luminaire Testing. When a contract has 30 or more luminaires of the same manufacturer's catalog number, that luminaire shall be independently tested to verify it will meet the contract requirements. The quantity of luminaires requiring testing shall be one luminaire for the first 30 plus one additional luminaire for each additional 50 luminaires of that catalog number. Testing is not required for temporary lighting luminaires.

Prior to testing the Contractor shall propose a properly accredited laboratory and a qualified independent witness, submitting their qualifications to the Engineer for approval. After approval, the Contractor shall coordinate the testing and pay all associated costs, including travel expenses, for the independent witness.

(1) Independent Witness. The independent witness shall select from the project luminaires at the manufacturer's facility the luminaires for testing. In all cases, the selection of

luminaires shall be a random selection from the entire completed lot of luminaires required for the contract. Selections from partial lots will not be allowed. The independent witness shall mark each sample luminaire's shipping carton with the IDOT contract number and a unique sample identifier.

At the time of random selection, the independent witness shall inspect the luminaire(s) for compliance with all physical, mechanical, and labeling requirements for luminaires according to Sections 821 and 1067. If deficiencies are found during the physical inspection, the Contractor shall have all luminaires of that manufacturer's catalog number inspected for the identified deficiencies and shall correct the problem(s) where found. Random luminaire selection and physical inspection must then be repeated. When the physical inspection is successfully completed, the independent witness shall mark the project number and sample identifier on the interior housing and driver of the luminaires and have them shipped to the laboratory.

The independent witness shall be present when testing is approved to be performed by the luminaire manufacturer. If the tests are performed by a laboratory independent of the luminaire manufacturer, distributor, and Contractor, the independent witness need not be present during the testing.

(2) Laboratory Testing. Luminaires shall be tested at an NVLAP accredited laboratory approved for each of the required tests. The testing shall include photometric, colorimetric, and electrical testing according to IES LM-79. Colorimetric values shall be determined from total spectral radiant flux measurements using a spectroradiometer. Photometric testing shall be according to IES recommendations and as a minimum, shall yield an isofootcandle chart, with max candela point and half candela trace indicated, an isocandela diagram, maximum plane and maximum cone plots of candela, a candlepower table (house and street side), a coefficient of utilization chart, a luminous flux distribution table, BUG rating report, and complete calculations based on specified requirements and test results.

All testing shall cover the full spherical light output at a maximum of 5 degree intervals at the vertical angles. The vertical angles shall run from Oto 180 degrees. There shall be a minimum of 40 lateral test planes listed in Fig. 1 of IES LM-31 plus the two planes containing the maximum candela on the left and right sides of the luminaire axis. Before testing, the luminaire when mounted on the goniometer shall be scanned for vertical and horizontal angles of maximum candela and these planes included in the test. The luminaire shall be checked for a bi-symmetric light distribution. Individual tests must be conducted for each hemisphere, quadrant, and left/right sides.

The results for each photometric and colorimetric test performed shall be presented in a standard IES LM-79 report that includes the contract number, sample identifier, and the outputs listed above. The calculated results for each sample luminaire shall meet or exceed the contract specified levels in the luminaire performance table(s). The laboratory shall mark its test identification number on the interior of each sample luminaire.

Electrical testing shall be in according to IES LM-79 as well as NEMA and ANSI standards. The report shall list luminaire characteristics including input amperes, watts, power factor, total harmonic distortion, and LED driver current for full and partial power.

(3) Summary Test Report. The summary test report shall consist of a narrative documenting the test process, highlight any deficiencies and corrective actions, and clearly state which luminaires have met or exceeded the test requirements and may be released for delivery to the jobsite. Photographs shall also be used as applicable to document luminaire deficiencies and shall be included in the test report. The summary test report shall include the Luminaire Physical Inspection Checklist (form BDE 5650), photometric and electrical test reports, and point-by-point photometric calculations performed in AGi32 sorted by luminaire manufacturers catalog number. All test reports shall be certified by the independent test laboratory's authorized representative or the independent witness, as applicable, by a dated signature on the first page of each report. The summary test reports shall be delivered to the Engineer and the Contractor as an electronic submittal. Hard copy reports shall be delivered to the Engineer for record retention.

(4) Approval of Independent Testing Results. Should any of the tested luminaires fail to satisfy the specifications and perform according to approved submittal information, all luminaires of that manufacturers catalog number shall be deemed unacceptable and shall be replaced by alternate equipment meeting the specifications. The submittal and testing process shall then be repeated in its entirety. The Contractor may request in writing that unacceptable luminaires be corrected in lieu of replacement. The request shall identify the corrections to be made and upon approval of the request, the Contractor shall apply the corrections to the entire lot of unacceptable luminaires. Once the corrections are completed, the testing process shall be repeated, including selection of a new set of sample luminaires. The number of luminaires to be tested shall be the same quantity as originally tested.

The process of retesting, correcting, or replacing luminaires shall be repeated until luminaires for each manufacturers catalog number are approved for the project. Corrections and re-testing shall not be grounds for additional compensation or extension of time. No luminaires shall be shipped from the manufacturer to the jobsite until all luminaire testing is completed and approved in writing.

Submittal information shall include a statement of intent to provide the testing as well as a request for approval of the chosen independent witness and laboratory. All summary test reports, written reports, and the qualifications of the independent witness and laboratory shall be submitted for approval to the Engineer with a copy to the Bureau of Design and Environment, 2300 S Dirksen Parkway, Room 330 Springfield, IL 62764.

1067.02 Roadway Luminaires. Roadway luminaires shall be according to Article 1067.01 and the following.

The luminaire shall be horizontally mounted and shall be designed to slip-fit on a 2-3/8 in. (60 mm) outside diameter pipe arm with a stop to limit the amount of insertion to 7 in. (180 mm). It shall not be necessary to remove or open more than the access door to mount the luminaire.

The effective projected area (EPA) of the luminaire shall not exceed 1.6 sq ft (0.149 sq m) and the weight, including accessories, shall not exceed 40 lb (18.14 kg). If the weight of the luminaire is less than 20 lb (9.07 kg), weight shall be added to the mounting arm or a supplemental vibration damper installed as approved by the Engineer.

The luminaire shall be equipped with both internal and external leveling indicators. The external leveling indicator shall be clearly visible in daylight to an observer directly under the luminaire at a mounting height of 50 ft (15.2 m).

The luminaire shall be fully prewired to accept a seven-pin, twist-lock receptacle that is compliant with ANSI C 136.41. All receptacle pins shall be connected according to TALQ Consortium protocol.

The luminaire shall be provided with an installed shorting cap that is compliant with ANSI C136.10.

1067.03 Highmast Luminaires. High mast luminaires shall be according to Article 1067 .01 and the following.

The luminaire shall be horizontally mounted and shall be designed and manufactured for highmast tower use. The EPA of the luminaire shall not exceed 3.0 sq ft (0.279 sq m) and the weight, including accessories, shall not exceed 85 lb (38.6 kg).

The optical assembly shall be capable of being rotated 360 degrees. A vernier scale shall be furnished on the axis of rotation for aiming the luminaire in relation to its mounting tenon arm. The scale shall be graduated in 5 degree increments or less. The luminaire shall be clearly marked at the vernier as to 'house-side' and 'street-side' to allow proper luminaire orientation.

1067.04 Underpass Luminaires. Underpass luminaries shall be according to Article 1067.01 and the following.

The underpass luminaire shall be complete with all supports, hardware, and appurtenant mounting accessories. The underpass luminaire shall be suitable for lighting a roadway underpass at an approximate mounting height of 15 ft (4.5 m) from a position suspended directly above the roadway edge of pavement or attached to a wall or pier. The underpass luminaire shall meet the requirements of ANSI C136.27.

It shall not be necessary to remove more than the cover, reflector and lens to mount the luminaire. The unit shall be heavy duty, suitable for highway use and shall have no indentations or crevices in which dirt, salt, or other corrosives may collect.

(a) Housing. The housing and lens frame shall be made of heavy duty die cast aluminum or 16 gauge (1.5 mm) minimum thickness Type 304 stainless steel. All seams in the housing enclosure shall be welded by continuous welds.

The housing shall have an opening for installation of a 3/4 in. (19 mm) diameter conduit.

(b) Lens and Lens Frame. The frame shall not overlap the housing when closed. The luminaire shall have a flat glass lens to protect the LEDs from dirt accumulation or be designed to prevent dirt accumulation. The optic assembly shall be rated IP 66 or higher.

1067.05 Sign Lighting Luminaires. Sign lighting luminaries shall be suitable for lighting overhead freeway and expressway guide signs; and shall be according to Article 1067.01.

1067.06 Light Sources. The light sources in all luminaires shall be LED according to Article 1067.01 and the following.

(a) The light source shall be according to ANSI C136.37 for solid state light sources used in roadway and area lighting.

(b) The light source shall have a minimum color rendering index (CRI) of 70 and a nominal correlated color temperature (CCT) of 4000 K.

(c) The rated initial luminous flux (lumen output) of the light source, as installed in the luminaire, shall be according to the following table for each specified output designation.

Output Designations And Initial Luminous Flux		(for information only)
Output Designation	Initial Luminous Flux (lm)	Approximate High Pressure Sodium (HPS) Equivalent Wattage
A	2,200	35 (Low Output)
B	3,150	50 (Low Output)
C	4,400	70 (Low Output)
D	6,300	100 (Low Output)
E	9,450	150 (Low Output)
F	12,500	200 (Med Output)
G	15,500	250 (Med Output)
H	25,200	400 (Med Output)
I	47,250	750 (High Output)
J	63,300	1,000 (High Output)
K	80,000+	1,000+ (High Output)

Luminaires with an initial luminous flux less than the values listed in the above table may be acceptable if they meet the requirements given in the Luminaire Performance Table shown in the contract."

RESTORATION OF WORK AREA
(Effective April 1, 2003; Revised April 27, 2018)

Add to Section 801 of the Standard Specifications:

The Contractor shall restore the work area as specified in Article 104.06 of the Standard Specifications. All damage to mowed lawns shall be replaced with an approved sod, and all damage to unmowed fields shall be seeded. Restoration of the work area will not be paid for separately, but shall be included in the cost of the associated pay items.

SERVICE INSTALLATION, GROUND MOUNTED
(Effective August 15, 2005; Revised January 1, 2007)

In addition to the requirements of Section 805 of the Standard Specifications the following shall apply:

Description: This work shall install, modify, or extend the electric service installation. All installations shall meet the requirements of the details included on the plans and applicable portions of these specifications.

Materials.

General. The completed control panel shall be constructed in accordance with UL Std. 508, Industrial Control Panel, and carry the UL label. Wire terminations shall be UL listed.

a. Enclosures: Ground Mounted Cabinet. The cabinet shall be UL 50, NEMA Type 3R unfinished signal door design with back panel. The cabinet shall be fabricated from Type 5052 H-32 aluminum with the frame and door 0.125 inch thick, the top 0.250 inch thick and the bottom 0.500 inch thick. Seams shall be continuous welded and ground smooth. The door and door opening shall be double flanged. The door shall be approximately 80% of the front surface, with a full length tamper proof stainless steel .075 inch thick hinge bolted to the cabinet with stainless steel carriage bolts and nylock nuts. The locking mechanism shall be slam-latch type with a keyhole cover. The cabinet shall be sized to adequately house all required components with extra space for arrangement and termination of wiring. A minimum size of 40 inches high, 16 inches wide, and 15 inches in depth is required. The cabinet shall be mounted upon a square Type A concrete foundation as indicated on the plans. The foundation is paid for separately.

b. Surge Protector. Over voltage protection, with LED indicator, shall be provided for the 120 volt load circuit by means of MOV and thermal fusing technology. The response time shall be <5n seconds and operate within a range of -40° F to 185° F (-40° C to 85° C). The surge protector shall be UL 1449 Listed.

c. Circuit Breakers. Circuit breakers shall be standard UL listed molded case, thermal-magnetic bolt-on type circuit breakers with trip free indicating handles. 120 volt circuit breakers shall have an interrupting rating of not less than 65,000 rms symmetrical amperes. Unless otherwise indicated, the main disconnect circuit breaker for the traffic signal controller shall be rated 60 amperes. Unless otherwise noted on the plans, 120 V and the auxiliary circuit breakers shall be rated 10 amperes, 120 V.

d. Fuses. Fuseholders, and Power Indicating Light. Fuses shall be small-dimensional cylindrical fuses of the dual element time-delay type. The fuses shall be rated for 600 V AC and shall have a UL listed interrupting rating of not less than 10,000 rms symmetrical amperes at rated voltage. The power indicating light shall be LED type with a green colored lens and shall be energized when electric utility power is present.

e. Ground and Neutral Bus Bars. A single copper ground and neutral bus bar, mounted on the equipment panel, shall be provided. Ground and neutral conductors shall be separated on the bus bar. Compression lugs, plus 2 spare lugs, shall be sized to accommodate the cables with the heads of the connector screws painted green for ground connections and white for neutral connections.

f. Utility Services Connections. The Contractor shall contact the utility company, prior to beginning work, to determine the utility company regulations relating to electrical service. The Contractor shall provide the utility company an estimated date that the service connection will be required, the agency which will be responsible for monthly service changes, and the connected load for flat rate billing if required. The customer service agreement with the utility company shall be executed by the agency responsible for monthly service charges.

All information furnished to the utility company shall be in writing with a copy provided to the Engineer. Prior to contacting the Utility Company for service connection, the service

installation controller cabinet and cable must be installed for inspection by the Utility Company.

During the interim between the service activation date and the signal turn on day, all energy charges for the intersection shall be paid by the Contractor according to Article 109.05 of the Standard Specifications. Beginning the day of the traffic signal turn on, all energy charges for the intersection will be paid by the responsible agency listed in the plans. The Contractor is responsible for making arrangements with the responsible agency to transfer billing to the responsible agency.

g. Ground Rod. Ground roads shall be copper-clad steel, a minimum of 10' in length, and 0.75 inch in diameter. Ground rod resistance measurements to ground shall be 25 ohms or less. If necessary, additional rods shall be installed to meet resistance requirements at no additional cost.

Installation.

a. General. The Contractor shall confirm the orientation of the traffic service installation and its door side with the Engineer, prior to installation. All conduit entrances into the service installation shall be sealed with a pliable waterproof material.

b. Ground mounted. The service installation shall be mounted plumb and level on the foundation and fastened to the anchor bolts with hot-dipped galvanized or stainless steel nuts and washers. The space between the bottom of the enclosure and top of the foundation shall be caulked at the base with silicone.

Basis of Payment. The service installation will be paid for at the contract unit price per each for SERVICE INSTALLATION, GROUND MOUNTED. The Type A foundation which includes the ground rod will be paid for separately.

DOUBLE HANDHOLE OR HANDHOLE, PORTLAND CEMENT CONCRETE

In addition to the requirements of Section 814 of the Standard Specifications the following shall apply:

Description: The work includes placing the double handhole at a lower elevation than the traffic signal controller cabinet. This work also includes turning the hooks down in the handholes. All installations shall meet the requirements of the details included on the plans and applicable portions of these specifications.

Basis of Payment. The DOUBLE HANDHOLE OR HANDHOLE, PORTLAND CEMENT CONCRETE will be paid for at the contract unit price respectively per each for DOUBLE HANDHOLE, PORTLAND CEMENT CONCRETE or HANDHOLE, PORTLAND CEMENT CONCRETE.

FULL-ACTUATED CONTROLLER AND TYPE IV CABINET

Description. This work shall consist of furnishing and installing a Full-actuated Controller and Type IV Cabinet at location shown on plan details. This work also includes installing a Type C foundation to support the Uninterruptible Power Supply (UPS) and an apron to provide a standing pad for UPS. The existing Type D foundation shall be used as part of the new Type C foundation and apron.

CONSTRUCTION REQUIREMENT

General. Full Actuated Controller and Type IV Cabinet shall meet the requirements of Sections 857, 1073 and 1074 of the Standard Specifications with the following modifications.

a) This item requires that a factory representative capable of ensuring that the controller and cabinet are operating to the satisfaction of the Engineer shall be present at the turn on of the controller and shall remain until the intersection is operating to the satisfaction of the Engineer. Should a defect appear in the controller or cabinet operation, the representative shall return as often as necessary until all defects are repaired.

b) At the preconstruction meeting, the Contractor shall provide the names and phone numbers of two technicians who would be able to respond to controller malfunctions that occur within the 30 day acceptance period after the controller is turned on. If neither person can be reached at the time of the malfunction nor be at the location within 2 hours of receiving the call, any available electrician capable of evaluating and correcting the malfunction may be called at the State's discretion. Any and all bills resulting from defective operation of the controller or cabinet shall be the responsibility of the Contractor.

CONTROLLER.

a) The controller brand shall be Siemens or other equivalent approved by the City Engineer.

b) The controller shall be capable of uploading and downloading its database to a laptop computer that has been installed with the proper software. All uploaded data shall be able to be changed within the laptop and then downloaded to the controller. The necessary cables for upload/download shall be provided and upload/download software shall be provided and installed onto the District Three laptop computer if the software and cables have not already been supplied to District Three or the software presently being used by District Three requires updating.

c) The controller data entry fields shall have a clear distinction between data fields and information. Data fields shall be in matrix format with a minimum of eight phases wide and four date lines deep.

d) The active status screen shall display the following information for all operating phasesin an alpha-numeric display.

e) A clear distinction between the following detections for each phase: vehicle recall, vehicle detection, pedestrian recall, and pedestrian detection.

f) A clear distinction among the phases receiving detection.

g) Status displayed simultaneously whenever one or more of the following is operating: vehicle passage timer, maximum phase timer, added initial timer, time before reduction timer, time to reduce timer, existing gap timer, walk timer, don't walk timer.

h) When a phase ends, the controller shall report whether the exit was a max out, gap out or force out condition. The controller shall show the yellow and red timers timing and any trailing overlap timers timing.

i) The color of all operating overlaps.

j) The phase of the controller shall be as shown in the plans.

CONTROLLER CABINET.

a) The controller cabinet brand shall be MoboTrex or other equivalent approved by the City Engineer.

b) The police door compartment shall contain a manual control cord from which the signals may be operated manually. The inside door toggle switches shall be protected from accidental contact by vertical metal slats. The slats shall extend beyond the switches, in a manner similar to the terminals on the back panel. A plastic plans holder shall be installed on the cabinet door. The holder shall be at least 11 inches high and 17 inches wide, shall open from the side, and shall not interfere with the filter. The holder shall have a means of closing the side opening to prevent water from entering.

c) A Plexiglas cover, or other high strength nonconductive cover, shall be installed over, and completely cover, the power panel. The cover shall completely shield the service wires, and circuit breaker wires from accidental contact.

d) A Plexiglas cover, or other high strength nonconductive cover, shall be installed over, and completely cover, the power terminals for the thermostatically controlled exhaust fan. The thermostat shall be of the knob type capable of adjustment by hand and without tools. The thermostat and terminals shall be mounted on the left or right side of the controller cabinet.

e) All harness wiring of connectors A, B, C and D shall be factory installed so that an additional phase may be added to the existing phasing by the addition of a load switch and the proper conflict monitor card pinning.

f) A self-adhering phasing diagram shall be placed on the inside of the cabinet door. Attach a phase and direction decal below the amplifiers.

g) Train the wire along the inside of the cabinet for length and cleanliness.

h) Add call push buttons on inside of cabinet.

i) Place a thermostatically controlled electric heater in the cabinet with LED light bulbs.

j) Traffic signal control and cabinet assembly shall be fully tested by the equipment supplier. Five (5) copies of the complete cabinet wiring showing all connections shall be furnished to the Engineer.

k) The Contractor shall provide a concrete pad in front of the controller cabinet. This concrete pad shall be considered part of this item and no additional compensation will be allowed.

l) Control cabinet shall have a pull-out drawer for a place to set a laptop and provide storage for cabinet prints and plans.

m) A generator factory outlet in an enclosed door shall be provided for the Uninterruptable power supply.

Basis of Payment. This work will be paid for at the contract unit price per each for FULL-ACTUATED CONTROLLER AND TYPE IV CABINET which price shall be payment in full to complete this work.

COMBINATION LIGHTING CONTROLLER

Description: This work shall consist of furnishing and installing a photocell with integral surge arrester, 3-position selector switch (H-O-A), terminal/splice blocks, and 30 Amp lighting contactor (120V) in the traffic signal cabinet to control the operation of the combination lighting units.

A 120 Volt 20 Amp circuit breaker shall be installed inside the traffic signal controller connected to the main breaker, to serve the roadway lighting, per section 1068.01(e)(3) of the Standard Specifications. The circuit breaker shall be clearly labeled for lighting according to Article 1068.01(f) of the Standard Specifications.

Install all lighting components independent of the traffic signal components on one side of the cabinet and label as "LIGHTING". The under eave photocell shall be mounted on the traffic signal controller cabinet, per section 1068.01(e)(2) of the Standard Specifications. Furnish and install all wiring between components to make a fully functional lighting control system for the combination lights.

Basis of Payment: This work shall be paid for at the contract unit price per each for COMBINATION LIGHTING CONTROLLER, which shall be payment in full for all labor, materials, and equipment required to complete the installation.

UNINTERRUPTIBLE POWER SUPPLY, EXTENDED

In addition to the requirements of Section 861 of the Standard Specifications the following shall apply:

Description. This work also includes placing heating pads below each battery and providing a blue indicator light. All installations shall meet the requirements of the details included on the plans and applicable portions of these specifications.

Basis of Payment. UNINTERRUPTIBLE POWER SUPPLY, EXTENDED will be paid for at the contract unit price respectively each for UNINTERRUPTIBLE POWER SUPPLY, EXTENDED.

PEDESTRIAN SIGNAL HEAD AND SIGNAL HEAD, POLYCARBONATE, LED, 1-FACE, MAST ARM OR BRACKET MOUNTED, 3-SECTION OR 5-SECTION OR PEDESTRIAN SIGNAL HEADS.

In addition to the requirements of Section 880 of the Standard Specifications the following shall apply:

Description: This work includes having a 15 year warrant with warrant certification on all signal heads for this project. This work also includes having a manufacture snow cone on all red, yellow and green signal heads for this project. Any other devices that have proven record of removing snow when snow is compacted in the signal lenses and visors may be used on this project. All installations shall meet the requirements of the details included on the plans and applicable portions of these specifications.

Basis of Payment: PEDESTRIAN SIGNAL HEAD AND SIGNAL HEAD, POLYCARBONATE, LED, 1-FACE, MAST ARM OR BRACKET MOUNTED, 3-SECTION OR 5-SECTION OR PEDESTRIAN SIGNAL HEADS will be paid for at the contract unit price respectively per each for PEDESTRIAN SIGNAL HEAD AND SIGNAL HEAD, POLYCARBONATE, LED, 1-FACE, MAST ARM OR BRACKET MOUNTED, 3-SECTION OR 5-SECTION OR PEDESTRIAN SIGNAL HEADS.

TRAFFIC SIGNAL BACKPLATE, LOUVERED, FORMED PLASTIC SPECIAL

Description. This item consists of furnishing and installing a LOUVERED, FORMED PLASTIC TRAFFIC SIGNAL BACKPLATE as specified herein and all hardware accessories required to install on all proposed signal heads as described in Article 882 and 883.

The vacuum formed ABS plastic backplate shall have a nominal ½ inch deep back flange on all inside and outside edges. The backplate shall be louvered and provide openings (louvers) to all wind to penetrate and reduce wind loading. The louver openings shall cover a minimum of 20 percent of the surface area of the backplate. The entire front and side surface of the backplate including louver shall be manufactured so that it is imprinted with fluorescent yellow sheeting. The sheeting shall be Type AZ sheeting according to Article 1091.03 and applied to the preferred orientation for the maximum angularity according to the manufacturer's recommendation.

Basis of Payment. This item shall be paid for at the contract unit price each for TRAFFIC SIGNAL BACKPLATE, LOUVERED, FORMED PLASTIC, SPECIAL.

VIDEO VEHICLE DETECTION SYSTEM, SPECIAL

This specification sets forth the minimum requirements for a video detection system that shall detect an advance vehicle on a roadway by processing video images, and that provided vehicle presence, traffic flow data, event alarms, and full-motion video for real-time traffic control management systems.

The Video Vehicle Detection System, Special shall be used at the traffic signal at the intersection of IL 23 and Gurler Road. The Video Vehicle Detection System shall be the latest version and shall take the place of the existing detector loops.

The Video Vehicle Detection System, Special shall have a 10-year paid cellular service plan which would be used for cellular data. The Illinois Department of Transportation (IDOT) shall not have to pay for any cellular service plans or data until after the end of the 10-year plan. The plan should have unlimited data, roaming charges, and minutes for all incoming and outgoing connections.

The 10-year paid cellular service plan shall also have unlimited and uninterrupted streaming video capabilities. This cellular service data plan cellular service data plan shall also Include unlimited hotspot service for the area covering the State of Illinois. This cellular service plan can be the same

plan as the Remote-Controlled Video System cellular plan. The start date of the paid cellular service plan shall not begin until the Video Vehicle Detection System is approved by the Resident Engineer.

The Video Vehicle Detection System, Special shall include removing all existing detector wire from handhole, conduit, poles and controllers due to installation of new cameras. Need to inform city and state engineer before removing. The Video Vehicle Detection System, Special also includes removing all detector harnesses, detector amplifier racks, amplifier, detector loop panels and any other detector loop item no in use in controller cabinet. The amplifiers shall remain the property of the state and the remaining detector loop items shall become the possession of the contractor including the wire.

The Video Vehicle Detection System, Special shall include removing the existing nonfunctional handholes which are the ones that have existing detector loop cable only. The removal of existing handhole shall be according to Section 895 of the Standard Specifications for Road and Bridge Construction.

The Video Vehicle Detection System shall include three (3) new Surface Pros or equivalent. The Surface Pro or equivalent shall be latest and compatible Window base along with latest 10-year Microsoft Office package with 10-year continuous updates and 10 year warranty. The Surface Pro or equivalent shall also include the latest 10-year antivirus package with 10-year continuous updates and 10-year warranty. The Surface Pro shall be a half inch width or less. The unit shall also a keyboard and shall be light in weight. The Surface Pro or equivalent shall be able to be used in remote locations. The three units shall include the latest software necessary to remotely access all video cameras at the intersection of Illinois Route 23 and Gurler Road and any other future intersections with cameras. The outside of the three Surface Pro units or equivalent shall be made of hard plastic and sealed rubber similar to an Otterbox.

The three (3) units shall come with an adequate size laptop carrycase so the units fit comfortable in each.

The three (3) Surface Pros or equivalent shall have a ten (10) year warranty with three (3) Video Vehicle Detection System licenses. The three (3) surface pros warranties and licenses shall start the day of training.

The contractor shall provide two (2) days of training by a factory representative on the software for up to ten (10) people. Ten (10) year software maintenance and updates shall be provided for all three (3) Video Vehicle Detection System licenses on the three (3) tablets, three (3) laptops, and three (3) desktops.

The Video Vehicle Detection System shall provide remote access to three (3) tablets, three (3) laptops, and three (3) desktops at the IDOT District 3 office in Ottawa. Illinois. The remote three (3) tablets, three (3) laptops, and three (3) desktops shall have access to all video cameras to be able to watch or change detector loops placement, type, and size at all four (4) Intersecting legs.

The Video Vehicle Detection System shall be capable of communicating with the Centrac's Advance Traffic Management System and the Tactic's Advance Traffic Management System. The Video Detection System shall work wirelessly to the new controller placed inside the new traffic signal cabinet.

The video camera shall provide real life pictures of the roadway and vehicles.

The manufacturer shall recommend the height in location of the video camera so the proper detection zones will detect and monitor all four (4) legs except three (3) legs at Minooka High School from ten (10) feet in front of the stop bar until 500 feet in advance of the stop bar. The Video Vehicle Detection System shall use as many cameras as needed to provide and monitor the proper detection for all four (4) legs except three (3) legs at Minooka High School. The video camera or cameras shall either be mounted on the luminaire arm, the mast arm, or a six (6) foot extension on the mast arm.

The Video Detection System shall include a monitor (minimum size of 12" by 12") with mouse inside the cabinet so the maintainer can monitor the detector loops in each direction. Make sure the traffic signal cabinet is big enough to provide comfortable room for the monitor.

The complete system shall also include an 18 AWG 3 conductor unshielded 600V cable. The video detection system shall also include a 6-foot video detection pipe extension mounted on all mast arms to withstand 80mph wind. See plan drawings on traffic signal plan sheets at US 6 and Champlain Street.

System Hardware. The video detection system shall be comprised of two major hardware components: a video sensor and a communications interface panel. An optional wired input/output card shall be available for certain cabinet types.

Video Sensor. The video detection system shall include a video sensor that integrates a high definition (HD) camera with an embedded processor for analyzing the video and performing detection.

Camera and Processor.

- The camera shall be a color CMOS imaging array.
- The camera shall have HD resolution of at least 720p (1280x720 pixels).
- The camera shall include a minimum 10X optical zoom.
    - It shall be possible to zoom the lens as required to satisfy across-the-intersection detection objectives, including stop line and advance detection.
    - It shall be possible to zoom the tens remotely from the TMC for temporary traffic surveillance operations or to inspect the cleanliness of the faceplate.
- The camera shall have direct, real-time iris and shutter speed control by the integrated processor.
- The processor shall support H.264 video compression for streaming output.

Video Sensor Enclosure Assembly.

- The camera and processor shall be housed in a sealed IP-67 enclosure.
    - The faceplate of the enclosure shall be glass and shall have hydrophilic coating on the exterior surface to reduce debris accumulation and maintenance.
    - The faceplate shall have a thermostatically-controlled indium tin oxide (ITO) heater applied directly on the interior surface to keep the faceplate clear of condensation, snow, ice, and frost.
- An adjustable aluminum visor shall shield the faceplate from the sun and extraneous light sources.
- An integral aiming sight shall assist in aiming the camera for the detection objectives.
- A removable rear cap and cable strain relief shall sea! the power connection.
    - The rear cap shall be tethered to the enclosure to avoid dropping the cap during installation.

- The rear cap shall be fastened to the body of the video sensor with a single, captive bolt.

- The rear cap and enclosure shall include Gore breathers to equalize internal and external pressure while preventing moisture from entering the camera.
- The sensor shall be self-supporting on the manufacturer's mounting brackets for easier fastening during installation.
  - It shall be possible to rotate the field-of-view 360^0 without changing the angle of the visor.

Power and Communications.

- Power and communications for the video sensor shall be carried over a single three-conductor cable.
  - Termination of the three-conductor cable shall be inside the rear cap of the enclosure on a three-position, removable Phoenix terminal block. Each conductor shall be attached to the Phoenix plug via a screw connection.
- The video sensor shall operate normally over an input voltage range of 89 to 265 VAC at 50 or 60 Hz.
- Power consumption shall be no more than 16 watts typical.
- No supplemental surge suppression shall be required outside the cabinet.
- All communications to the video sensor shall be broadband-over-power via the same three-conductor cable that powers the unit. Coaxial cable shall not be required.

Communications Interface Panel. The video detection system shall include an interface panel in the traffic cabinet that manages communications between the video sensors, the traffic management center, a maintenance technician, and the traffic cabinet itself.

Video Sensor Connection.

- The communications interface panel shall provide connection points for four video sensors.
  - Each sensor connection shall be a 3-pole terminal block, which supplies power and broadband-over-power communications to the sensor.
  - The broadband-over-power communications shall provide a throughput of 70 to 90 Mbps.
  - The broadband-over-power connection shall support at least 1,000 feet of cabling to the video sensor.
  - Each video sensor connection shall include a power switch.
  - There shall be an LED for each video sensor to indicate the state of the power to the sensor and an LED for each video sensor to indicate the status of communications.
  - Each video sensor connection shall contain a resettable fuse.
  - Each video sensor connection shall provide high-energy transient protection.

Traffic Management Center (TMC) Communications.

- An Ethernet port shall be provided to connect to a remote Traffic Management Center (TMC).
  - The TMC connection shall support 10/100/1000 Mbps Ethernet communication.
  - The communications interface panel shall proxy all network requests that arrive on the TMC connection to avoid unwanted network traffic from reaching the broadband-over-power network between the communications interface panel and the video sensors.
  - All communications to the video detection system through the TMC connection shall be to a single IP address.
  - The system shall be able to provide Full HD quality video through its WAN port for use in streaming video back to the TMC or any remote location.

Local User Communications.

- A wired Ethernet port shall be provided to connect the technician at the cabinet to the video detection system for setup and maintenance purposes.
  - The maintenance port shall support 10/100/1000 Mbps Ethernet communication.

    - All communications to the video detection system through the maintenance port shall be to a single IP address.
    - The maintenance port shall support DHCP to automatically assign an IP address to the user's computer.
- An 802.11g Wi-Fi access point shall allow wireless connection to the video detection system at the cabinet for setup and maintenance purposes.
    - All communications to the video detection system through the Wi-Fi access point. shall be to a single IP Address.
    - The Wi-Fi access point shall support DHCP to automatically assign an IP Address to the user's computer.
    - The Wi-Fi access point shall include a dipole, omnidirectional antenna.
    - A momentary pushbutton shall allow the user to tum the Wi-Fi access point on or off.
    - The Wi-Fi access point shall turn itself off automatically aner a period of inactivity from connected devices.
    - An LED shall indicate when the Wi-Fi access point is enabled.
    - The Wi-Fi access point shall operate simultaneously with the wired maintenance port and with the TMC connection.
    - The WiFi access point shall require a password for connection by a users computer. The default password shall be changeable.

Traffic Controller Connection. The communications interface panel shall provide one (1) connection to communicate to the traffic controller through the cabinet.

- The traffic controller connection shall support a TS2 Type 1 compatible SDLC interface.
    - The traffic controller connector shall be a 15-pin female metal shell D sub-miniature type connector to support a standard NEMA TS2 or TEES SDLC cable.
    - The traffic controller connection shall support a protocol interface to SDLC-capable traffic controllers (NEMA or TEES).
    - The traffic controller connection shall support the NEMA TS2 SDLC protocol to include up to 64 detector outputs and 32 inputs.
- The traffic controller connection shall be able to connect to a wired input/output card, which supports wired 1/0 in cabinets without a SDLC-capable controller.
    - The wired J/0 data communications link shall support at least 24 outputs and 16 inputs.
- It shall be possible to connect and use both SDLC communications and communication to the wired input/output card simultaneously.

USB Ports.

- The communications interface panel shall include two USB 2.0 ports.
    - If a communications interface panel fails to start and run due to a software or operating system failure, it shall be possible to reinstall all system and application software from a USB memory stick without necessitating removal of the communications interface panel from the cabinet.
    - Video recording of up to 2 cameras simultaneously shall commence automatically when an appropriately configured USB memory stick is installed in either USB port.

Power.

- The communications interface panel shall accept input voltage in the range of 89-265 VAC, 50/60 Hz power from the transient-protected side of the cabinet.
- The communications interface panel shall be protected by two slow blow fuses. Spares shall be attached to the panel.

Wired Input/Output Card. The video detection system shall support an optional wired input/output card that communicates with the communications interface panel for real-time detection states and other 1/0 to the traffic controller. The card may reside in a standard detector rack or shelf-mount enclosure with power module.

The optional wired input/output card shall comply with the form factor and electrical characteristics to plug directly into a NEMA type C or D detector rack or Caltrans TEES Input File.

- The card shall occupy two slots of the detector rack.
- The card shall provide four detector outputs on its rear-edge connector.
- A front connector shall provide communication to the communications interface panel.
- A front connector shall allow 16 inputs and 24 contact-closure detector outputs for wiring into the cabinet.
- A front panel LED for each of the 16 inputs and 24 outputs shall indicate the state of the input or output.
- The wired input/output card shall support optional expansion cards in other slots. Each expansion card shall support 4 outputs to the back edge of the card.
- The wired input/output card shall support optional harnesses for connection to Input Files or C1. C4, C11, and C12 ports to support Type 170 or Type 2070 controllers.

System Software. The video detection system shall include management software for configuration, monitoring and data collection purposes.

Management Software.

- Management software shall be a Windows-based application.
    - The software shall be compatible with Windows 7 and Windows 10 operating systems
    - The software shall communicate with the video detection system via Ethernet.
- The management software shall automatically determine all video sensors and communications interface panels available on the local network and populate a list of all devices.
- The management software shall provide a means to add video sensors and communications interface panels on routed networks by the communications panel's WAN IP address.
- The management software shall provide the user a means to name individual video sensors and communications interface panels.
- The management software shall provide a means for the user to zoom the camera optics while viewing a live video stream.
- The management software shall provide a means for the user to easily calibrate distances in the field of view so as to create a 3-dimensional mapping of the complete field of view.
- The management software shall provide the user a means to create 4-sided detection zones in the field of view using either a still snapshot or live video.
    - The management software will overlay an outline of each detection zone over the background image.
    - It shall be possible for the user to place detection zones anywhere in the field of view for stop line detection and/or advance detection.
    - It shall be possible for the user to set the desired color of both the "on" and "off" states of the overlay for individual detection zones.
    - It shall be possible for the user to alter the size and shape of any previously created zone.
        - It shall be possible for the user to click and drag any of the 4 sides of a zone and the system will automatically scale the length of the side consistent with the 3-dimensional field of view.
        - It shall be possible for the user to move an entire zone without automatic rescaling.
    - It shall be possible for the user to create a new zone by selecting an existing zone and duplicating it on either the left or right side or specifying a new zone behind (for advance) with a specific length and distance back from selected zone.
    - It shall be possible for the user to easily rotate a zone by selecting any of its four corners and dragging to rotate it.
    - It shall be possible to easily flip the zone direction 180 degrees from its current orientation.
    - It shall be possible for the user to name each zone uniquely.

- It shall be possible for the user to assign each zone to detect vehicles, to detect bicycles, or to detect both, and to specify different outputs for each type.
- It shall be possible for the user to specify the output of a zone as a presence, pulse, or snappy type output (presence during red and pulse during green signal phase state).
- The pulse output shall be usable for both approaching and receding traffic.
- The pulse output shall have a user programmable duration from 100 to 400 ms.
- It shall be possible for a zone to have multiple output types (presence, pulse, snappy) on separate output channels.
- It shall be possible for the user to tie the presence outputs of multiple zones as well as signal phase state together with AND/OR Boolean logic.
- It shall be possible for the user to assign the same output to multiple zones such that the output will be on if any of the zones are detecting a vehicle or bicycle.
- It shall be possible for the user to assign a single zone to more than one output such that if a vehicle or bicycle is detected, all the assigned outputs shall be turned on.
- The management software shall be capable of creating at least 99 detection zones per video sensor.

- It shall be possible for the management software to retrieve all configuration parameters from video sensors or communications interface panels.
  - It shall be possible for the user to save all the settings for a video sensor or a communications interface panel to a laptop file.
  - The management software shall provide a means to read or import all the settings from a previously saved configuration file for a video sensor or a communications interface panel.
- The management software shall be able to download a new version of the application software into a communications interface panel and its attached video sensors.
- The management software shall provide a screen to monitor operation of a video sensor.
  - The monitoring screen shall include a live video stream from the video sensor with at least HD 1280x720 pixel resolution.
  - The monitoring screen shall show indications of detection In real time by changing the color of the detection zone.
  - It shall be possible for the user to configure different indications for vehicle detections vs. bicycle detections when both are configured for the same zone.
  - The monitoring screen shall include the following optional, configurable objects. It shall be possible for the user to size and position them anywhere on the screen and to change the color and size of text.
    - An indication of when either a zone or an output is on or off, along with a user configurable name for that indicator, applicable to any zone or output type.
    - The current time in the video sensor.
    - A user-configurable title or name.
    - The version number of the video sensor software.
    - Configurable text as defined by the user.
  - Undo/Redo functions shall be available for operations during detection zone setup and programming.
  - It shall be possible for the user to turn the overlay graphics on or off with a single setting.
- The management software shall provide a screen to monitor operation of the intersection with a quad-view video stream from the communications interface panel.
  - The quad-view video stream shall have a resolution of at least HD 1280x720 pixels, where each of the sensor videos comprising the quad-view shall be at least 640x360 pixels.

- It shall be possible for the user to configure the order that the sensor videos appear in the quad-view.
- The real-time quad-view video stream shall be capable of displaying the overlay graphics for all four sensors simultaneously.

- While monitoring the video of a single video sensor or of the quad-view, it shall be possible for the user to request a "snapshot" or single-frame image to save to a named file on a laptop.
- While monitoring the video of a single video sensor or of the quad-view, it shall be possible for the user to record a period of the video to save to a named file on a laptop.

System Functionality. The video detection system shall provide the following features and functionality.

Detection Performance.

- The video detection system shall detect the presence of vehicles in defined zones and turn on the assigned output when the vehicle is present in the zone.
  - Stop Line Detection
    - For detection zones placed at the stop line, the probability of not detecting the presence of a vehicle shall be 1% or less when aggregated over a 24-hour period when the video sensor is installed and configured property.
    - For detection zones placed at the stop line, the probability of falsely detecting a vehicle that is not present shall be 3% or less when aggregated over a 24-hour period when the video sensor is installed and configured properly.
  - Advance Detection
    - It shall be possible to place advance detector zones such that the farthest point of the zone is up to 600 feet from the video sensor. Advance detector zone placement shall include 2-3 car lengths of field-of-view beyond the farthest point of the zone.
  - Receding Zones
    - The video detection system shall be capable of detecting receding vehicles in day or night conditions when the video sensor is installed and configured properly.
- To ensure statistical significance for the above detection performance specifications, the data shall be collected over 24-hour time intervals (so as to avoid a single lighting condition) and will contain a minimum of one hundred (100) vehicles per lane. The calculations of detection performance will not include turning movements where vehicles do not pass through the detectors, vehicle lane-change anomalies, or where they stop short or stop beyond the combined detection zones.

Failsafe Mode.

- The video detection system shall provide three (3) failsafe options during optical contrast loss. The default shall be maximum recall. The end-user may also choose to use minimum recall or fixed recall in which a user-defined number of seconds may be implemented to hold call during green.
- The video sensor shall continuously monitor the overall contrast in the video. If the overall contrast falls below a preset level (such as caused by ditty faceplate, severe glare, extreme fog, or temporary ice/snow on the faceplate), the sensor shall enable the chosen failsafe mode. When sufficient contrast is restored in the video, the sensor will exit the failsafe mode.
- The communications interface panel shall continuously monitor the connectivity status of the attached video sensors. If any video sensor goes offline due to either electrical failure or internal software failure, the communications interface panel shall enable the failsafe mode for that video sensor. If the video sensor comes back online, failsafe mode shall end.

Data Collection.

- The video detection system shall automatically collect and store traffic flow data in nonvolatile memory for later retrieval and analysis. No additional hardware or software shall be necessary. Data functionality shall include the following:
    - Data shall be collected automatically for all zones created by the user once the learn period is complete and normal detection is active. No further setup shall be required.
    - Vehicle counts per zone.
    - Vehicle turning movements independent of zone.
    - Vehicle average speeds.
    - Vehicle lengths.
    - Detection statistics with the on/off timestamps when zones were activated.
    - Detection actuation statistics for whether a zone was triggered by a vehicle or a bicycle.
- The management software shall be able to retrieve collected data over a specified period of time or for all currently stored data and save into a standard CSV file.
- The sensor hardware shall include up to 8GB of memory storage capacity for data collection.
- Data Download Types
    - Options shall be provided for downloaded data in the form of a .csv file for Raw data, Binned data, Detections and Zone Status as defined below:
        - Raw Data - Includes time stamped Zone statistics for vehicle or bike actuations and average speed as well as time stamped Exiting Vehicle Statistics which include volume, turning movement direction, speed and length for vehicles exiting each zone.
        - Binned Data - Pre-binned data with bin time set by the user down to as little as 1 minute. Data shall include volume, occupancy, turning movement counts and speed for vehicles for each zone.
        - Detections - Date/time stamped data regarding vehicles exiting zones including type of object (vehicle or bike), speed, length and direction of movement (through, left, right).
        - Zone Status — Date/Time stamped indications of whether a vehicle or bicycle actuated a zone and the average speed of all objects in the zone.
    - Remote Data Interface
        - Data including counts, turning movements, speed and length, as well as zone names, sensor status, and video snapshots shall be available to remote systems via remote communication to the system using an Applications Programming Interface (API). This API shall consist of a set of GET commands embedded in HTTP protocol. The resulting data returned shall be in JSON format.

Operations Log.

- The communications interface panel and each video sensor shall maintain a time-stamped operations log of routine and special events in non-volatile memory for later retrieval and analysis.

Time Synchronization.

- The video detection system and management software shall provide three methods to synchronize the time of day clocks in the communication interface panel and the video sensors, as follows:
    - Manual time synchronization operation by the user, which sets the time to the current time on the laptop where the management software is running.
    - A configuration setting to allow the communications interface panel to automatically obtain time from the NEMA TS2 protocol on the SDLC channel and broadcast it to the video sensors.

- A configuration setting to allow the communications interface panel to automatically obtain time from up to five Network Time Protocol (NTP) sources and broadcast it to the video sensors.

Video Streaming.

- In addition to the ability to view video streams in the management software, it shall be possible to view video from individual sensors or to view the quad-view from the communications interface panel using a third-party video player application on a tablet, smartphone or laptop computer.
- Video bitrate is user-definable between 100 Kbps-5000 Kbps. The default shall be 2048 Kbps. All bitrates shall provide 30 fps.

Installation and Setup. The video detection system hardware shall be designed for flexible, fast and easy installation and setup.

It shall be possible to mount the video sensor on an intersection pole, mast arm, or luminaire arm.

No special tools or extra equipment, other than a laptop for configuration, will be required.

Once all hardware is installed, connected and functional, it shall be possible to configure the video detection system for a typical 4-approach, 8-phase intersection in 15 minutes or less.

Warranty, Service, and Support. The video detection system shall be provided with the following warranty, service, and support options.

Warranty.

- The manufacturer shall warrant the video detection system and three (3) tablets for a minimum of ten (10) years, along with ten (10) years of software maintenance and upgrades.

Service.

- Ongoing software support by the manufacturer will include software updates of the video sensor, communications interface panel, and management software. These updates will be provided free of charge during the warranty period. The manufacturer will maintain a program for technical support and software updates following expiration of the warranty period. This program will be available to the contracting agency in the form of a separate agreement for continuing support.

Support.

- A quick-start guide, installation guide, application notes, and other materials shall be available from the manufacturer to assist in product installation and setup for various applications. In addition, training online or in person shall be available.
- Training shall be available to personnel of the contracting agency in application design, operation, setup, and maintenance of the video detection system.
- Manufacturer shall provide a tech support website, support email address and a 1-800 number for technical support.

Basis of Payment. This work will be paid for at the contract unit price EACH for VIDEO VEHICLE DETECTION SYSTEM, which price shall be payment in full for all labor, materials, video cameras, 3/c cable, one (1) 12" monitor with mouse, keyboard, four 4' pipe extension, video equipment in controller cabinet, video cable, remote access to three (3) IDOT District 3 tablets, three (3) IDOT District 3 laptops, and three (3) IDOT District 3 desktops, a wireless system between the video

cameras to the traffic signal controller, a ten (10) year warranty along with software maintenance and upgrades, and any other components or accessories associated with VIDEO VEHICLE DETECTION SYSTEM, SPECIAL.

The price also includes in full for all labor and materials to remove all existing detector wire mentioned and all other items described in controller cabinet. The price also includes in full for all labor and materials to remove all nonfunctional handholes with existing detector loop wires.

REMOTE-CONTROLLED VIDEO SYSTEM

Description: This work shall consist of furnishing and installing a Remote-Controlled Video System as specified herein.

a) The Remote-Controlled Video System shall be installed in the proposed traffic control cabinet at the intersection of IL Route 23 and Gurler Road as shown on the plan details. The cellular router shall provide secure internet connectivity for the video cameras, control MMU (conflict monitor), UPS, and all other devices in the new controller cabinet.

   This cellular service data plan shall also include unlimited hotspot service for the area covering the State of Illinois.

   The Remote-Controlled Video System shall include a PTZ camera and shall be mounted on a mast arm with extension bracket if needed using manufacturer guidelines. The PTZ camera shall have great visibility for all four directions.

b) The Remote-Controlled Video System shall give access to three (3) tablets, three (3) laptops, and three (3) desktops controlled at the IDOT, District 3 office in Ottawa, Illinois. The remote laptop shall have access to all video cameras to be able to watch all intersecting legs and a separate PTZ camera in real time, with real-life pictures of the roadway, vehicles, and signal controller cabinet.

c) The Remote-Controlled Video System shall be run on a cellular based communication system and be able to monitor active signal timing and data, open/closed cabinet door, along with the battery backup alarms during power failure from the remote laptop. The Remote-Controlled Video System shall also provide detector information and the most current timing software so the State has the ability to change timings in the controller from the remote laptop. All alert alarms shall be automatically emailed to three (3) District 3 personnel specified and all major alert alarms shall be texted to three (3) District 3 personnel.

d) The Remote-Controlled Video System shall have a ten (10) year warranty and a ten (10) year paid cellular service plan which would be used for cellular data for the three (3) tablets, three (3) laptops, and three (3) desktops. The Illinois Department of Transportation shall not have to pay for any cellular services plans or data until after the end of the ten (10) year plan. The plan should have unlimited data, roaming charges, and minutes for all incoming and outgoing connections. The ten (10) year paid cellular service plan shall also have unlimited and uninterruptible streaming video capabilities. The start date of the warranty and paid cellular service plan shall not being until the Remote-Controlled Video System has been approved by the Engineer.

e) The Remote-Controlled Video System shall include three (3) licenses with the latest software which shall be downloaded on three (3) existing laptops located at the Illinois Department of Transportation in Ottawa, Illinois. The three (3) licenses shall be used to remotely access all video cameras, controllers, MMU (conflict monitor), UPS, and all other devices in the new controller cabinet at the proposed traffic signal at IL Route 23 and Gurler Road.

f) The Remote-Controlled Video System shall also include three (3) Timing Software licenses shall be downloaded on the three (3) existing laptops at the Illinois Department of Transportation in Ottawa, IL.

g) The contractor shall provide two (2) days of training by a factory representative on the software for up to ten (10) people. A ten (10) year software maintenance and update shall be provided for all three (3) Remote-Controlled Video System licenses and for the three (3) Timing Software licenses.

Basis of Payment: This work shall be paid at the contract unit price per each for REMOTE-CONTROLLED VIDEO SYSTEM, which price shall be payment in full for all labor and materials for all items described above for the REMOTE-CONTROLLED VIDEO SYSTEM.

PERMANENT TRAFFIC SIGNAL TIMINGS

Description: This work shall consist of developing and implementing appropriate traffic signal timings for the specified intersection at the traffic signal turn-on.

All timings and adjustments necessary for this work shall be performed by an approved Consultant who has previous experience in optimizing Closed Loop Traffic Signal Systems for IDOT District 3. The Contractor shall contact the Traffic Signal Engineer for a listing of approved Consultants

The followings tasks are associated with PERMANENT TRAFFIC SIGNAL TIMING:

a) The Consultant shall conduct an on-site implementation of the traffic signal timings for the permanent traffic signal turn-on.

b) The Consultant shall be responsible for making fine-tuning adjustments to the timings in the field to alleviate observed adverse operating conditions and to enhance operations.

c) The Consultant needs to calculate and implement new pedestrian, yellow, and red clearances according to MUTCD and District 3 policies. The Consultant shall provide clearance calculations for the Traffic Signals Engineer to review.

d) "Zero out" all density times.

e) Confirm all detection in "non-locking."

Basis of Payment: The work shall be paid for at the contract unit price Each for PERMANENT TRAFFIC SIGNAL TIMING, which price shall be payment in full for performing all work described herein per intersection.

BDE SPECIAL PROVISIONS
For the November 5, 2021 Letting

The following special provisions indicated by a "check mark" are applicable to this contract and will be included by the Project Coordination and Implementation Section of the BD&E. An * indicates a new or revised special provision for the letting.

File Name	#		Special Provision Title	Effective	Revised
80099	1	☐	Accessible Pedestrian Signals (APS)	April 1, 2003	April 1, 2020
80274	2	☐	Aggregate Subgrade Improvement	April 1, 2012	April 1, 2016
80192	3	☐	Automated Flagger Assistance Device	Jan. 1, 2008	
80173	4	☐	Bituminous Materials Cost Adjustments	Nov. 2, 2006	Aug. 1, 2017
80426	5	☐	Bituminous Surface Treatment with Fog Seal	Jan. 1, 2020	
80436	6	☒	Blended Finely Divided Minerals	April 1, 2021	
80241	7	☐	Bridge Demolition Debris	July 1, 2009	
5026I	8	☐	Building Removal-Case I (Non-Friable and Friable Asbestos)	Sept. 1, 1990	April 1, 2010
5048I	9	☐	Building Removal-Case II (Non-Friable Asbestos)	Sept. 1, 1990	April 1, 2010
5049I	10	☐	Building Removal-Case III (Friable Asbestos)	Sept. 1, 1990	April 1, 2010
5053I	11	☐	Building Removal-Case IV (No Asbestos)	Sept. 1, 1990	April 1, 2010
80425	12	☐	Cape Seal	Jan. 1, 2020	Jan. 1, 2021
80384	13	☐	Compensable Delay Costs	June 2, 2017	April 1, 2019
80198	14	☐	Completion Date (via calendar days)	April 1, 2008	
80199	15	☐	Completion Date (via calendar days) Plus Working Days	April 1, 2008	
80293	16	☐	Concrete Box Culverts with Skews > 30 Degrees and Design Fills ≤ 5 Feet	April 1, 2012	July 1, 2016
80311	17	☒	Concrete End Sections for Pipe Culverts	Jan. 1, 2013	April 1, 2016
80261	18	☐	Construction Air Quality – Diesel Retrofit	June 1, 2010	Nov. 1, 2014
80387	19	☐	Contrast Preformed Plastic Pavement Marking	Nov. 1, 2017	
80434	20	☒	Corrugated Plastic Pipe (Culvert and Storm Sewer)	Jan. 1, 2021	
80029	21	☐	Disadvantaged Business Enterprise Participation	Sept. 1, 2000	March 2, 2019
80402	22	☒	Disposal Fees	Nov. 1, 2018	
80378	23	☐	Dowel Bar Inserter	Jan. 1, 2017	Jan. 1, 2018
80421	24	☐	Electric Service Installation	Jan. 1, 2020	
80415	25	☒	Emulsified Asphalts	Aug. 1, 2019	
80423	26	☐	Engineer's Field Office and Laboratory	Jan. 1, 2020	
80229	27	☐	Fuel Cost Adjustment	April 1, 2009	Aug. 1, 2017
80417	28	☐	Geotechnical Fabric for Pipe Underdrains and French Drains	Nov. 1, 2019	
80420	29	☐	Geotextile Retaining Walls	Nov. 1, 2019	
80433	30	☐	Green Preformed Thermoplastic Pavement Markings	Jan. 1, 2021	
80304	31	☐	Grooving for Recessed Pavement Markings	Nov. 1, 2012	Nov. 1, 2020
80422	32	☐	High Tension Cable Median Barrier	Jan. 1, 2020	Nov. 1, 2020
80416	33	☒	Hot-Mix Asphalt – Binder and Surface Course	July 2, 2019	Nov. 1, 2019
80398	34	☒	Hot-Mix Asphalt – Longitudinal Joint Sealant	Aug. 1, 2018	Nov. 1, 2019
80406	35	☐	Hot-Mix Asphalt – Mixture Design Verification and Production (Modified for I-FIT)	Jan. 1, 2019	July 1, 2021
80347	36	☐	Hot-Mix Asphalt – Pay for Performance Using Percent Within Limits – Jobsite Sampling	Nov. 1, 2014	July 2, 2019
80383	37	☐	Hot-Mix Asphalt – Quality Control for Performance	April 1, 2017	July 2, 2019
80411	38	☒	Luminaires, LED	April 1, 2019	July 1, 2021
80393	39	☒	Manholes, Valve Vaults, and Flat Slab Tops	Jan. 1, 2018	March 1, 2019
80045	40	☐	Material Transfer Device	June 15, 1999	Aug. 1, 2014
80418	41	☐	Mechanically Stabilized Earth Retaining Walls	Nov. 1, 2019	Nov. 1, 2020
80424	42	☐	Micro-Surfacing and Slurry Sealing	Jan. 1, 2020	Jan. 1, 2021
80428	43	☒	Mobilization	April 1, 2020	
80412	44	☐	Obstruction Warning Luminaires, LED	Aug. 1, 2019	
80430	45	☒	Portland Cement Concrete – Haul Time	July 1, 2020	
80359	46	☐	Portland Cement Concrete Bridge Deck Curing	April 1, 2015	Nov. 1, 2019
80431	47	☐	Portland Cement Concrete Pavement Patching	July 1, 2020	
80432	48	☐	Portland Cement Concrete Pavement Placement	July 1, 2020	
80300	49	☐	Preformed Plastic Pavement Marking Type D - Inlaid	April 1, 2012	April 1, 2016
3426I	50	☐	Railroad Protective Liability Insurance	Dec. 1, 1986	Jan. 1, 2006

	80157	51	☐	Railroad Protective Liability Insurance (5 and 10)	Jan. 1, 2006	
	80306	52	☒	Reclaimed Asphalt Pavement (RAP) and Reclaimed Asphalt Shingles (RAS)	Nov. 1, 2012	Jan. 2, 2021
	80407	53	☒	Removal and Disposal of Regulated Substances	Jan. 1, 2019	Jan. 1, 2020
	80419	54	☒	Silt Fence, Inlet Filters, Ground Stabilization and Riprap Filter Fabric	Nov. 1, 2019	July 1, 2021
	80395	55	☐	Sloped Metal End Section for Pipe Culverts	Jan. 1, 2018	
	80340	56	☐	Speed Display Trailer	April 2, 2014	Jan. 1, 2017
	80127	57	☐	Steel Cost Adjustment	April 2, 2004	Aug. 1, 2017
	80408	58	☐	Steel Plate Beam Guardrail Manufacturing	Jan. 1, 2019	
	80413	59	☐	Structural Timber	Aug. 1, 2019	
	80397	60	☒	Subcontractor and DBE Payment Reporting	April 2, 2018	
	80391	61	☒	Subcontractor Mobilization Payments	Nov. 2, 2017	April 1, 2019
	80437	62	☒	Submission of Payroll Records	April 1, 2021	
	80435	63	☐	Surface Testing of Pavements – IRI	Jan. 1, 2021	April 1, 2021
	80298	64	☒	Temporary Pavement Marking	April 1, 2012	April 1, 2017
	80409	65	☒	Traffic Control Devices - Cones	Jan. 1, 2019	
	80410	66	☐	Traffic Spotters	Jan. 1, 2019	
	20338	67	☐	Training Special Provisions	Oct. 15, 1975	
	80318	68	☐	Traversable Pipe Grate for Concrete End Sections	Jan. 1, 2013	Jan. 1, 2018
	80429	69	☐	Ultra-Thin Bonded Wearing Course	April 1, 2020	
*	80439	70	☒	Vehicle and Equipment Warning Lights	Nov. 1, 2021	
	80288	71	☒	Warm Mix Asphalt	Jan. 1, 2012	April 1, 2016
*	80440	72	☐	Waterproofing Membrane System	Nov. 1, 2021	
*	80302	73	☐	Weekly DBE Trucking Reports	June 2, 2012	Nov. 1, 2021
	80414	74	☐	Wood Fence Sight Screen	Aug. 1, 2019	April 1, 2020
	80427	75	☒	Work Zone Traffic Control Devices	Mar. 2, 2020	
	80071	76	☐	Working Days	Jan. 1, 2002	

The following special provisions are in the 2021 Supplemental Specifications and Recurring Special Provisions.

File Name	Special Provision Title	New Location(s)	Effective	Revised
80277	Concrete Mix Design – Department Provided	Check Sheet #37	Jan. 1, 2012	April 1, 2016
80405	Elastomeric Bearings	Article 1083.01	Jan. 1, 2019	
80388	Equipment Parking and Storage	Article 701.11	Nov. 1, 2017	
80165	Moisture Cured Urethane Paint System	Article 1008.06	Nov. 1, 2006	Jan. 1, 2010
80349	Pavement Marking Blackout Tape	Articles 701.04, 701.19(f), 701.20(j) and 1095.06	Nov. 1, 2014	April 1, 2016
80371	Pavement Marking Removal	Articles 783.02-783.04, 783.06 and 1101.13	July 1, 2016	
80389	Portland Cement Concrete	Article 1020.04 Table 1 and Note 4	Nov. 1, 2017	
80403	Traffic Barrier Terminal, Type 1 Special	Articles 631.04 and 631.12	Nov. 1, 2018	

The following special provisions have been deleted from use.

File Name	Special Provision Title	Effective	Revised
80317	Surface Testing of Hot-Mix Asphalt Overlays	Jan. 1, 2013	Aug. 1, 2019

The following special provisions require additional information from the designer. The additional information needs to be submitted as a separate document. The Project Coordination and Implementation section will then include the information in the applicable special provision.

- Bridge Demolition Debris
- Building Removal - Case I
- Building Removal – Case II
- Building Removal - Case III
- Building Removal-Case IV
- Completion Date
- Completion Date Plus Working Days
- DBE Participation
- Material Transfer Device
- Railroad Protective Liability Insurance
- Training Special Provisions
- Working Days

BLENDED FINELY DIVIDED MINERALS (BDE)

Effective: April 1, 2021

Revise the second paragraph of Article 1010.01 of the Standard Specifications to read:

"Different sources or types of finely divided minerals shall not be mixed or used alternately in the same item of construction, except as a blended finely divided mineral product according to Article 1010.06."

Add the following article to Section 1010 of the Standard Specifications:

"**1010.06 Blended Finely Divided Minerals.** Blended finely divided minerals shall be the product resulting from the blending or intergrinding of two or three finely divided minerals. Blended finely divided minerals shall be according to ASTM C 1697, except as follows.

(a) Blending shall be accomplished by mechanically or pneumatically intermixing the constituent finely divided minerals into a uniform mixture that is then discharged into a silo for storage or tanker for transportation.

(b) The blended finely divided mineral product will be classified according to its predominant constituent or the manufacturer's designation and shall meet the chemical requirements of its classification. The other finely divided mineral constituent(s) will not be required to conform to their individual standards."

80436

CONCRETE END SECTIONS FOR PIPE CULVERTS (BDE)

Effective: January 1, 2013
Revised: April 1, 2016

Description. This work shall consist of constructing cast-in-place concrete and precast concrete end sections for pipe culverts. These end sections are shown on the plans as Highway Standard 542001 or 542011. This work shall be according to Section 542 of the Standard Specifications except as modified herein.

Materials. Materials shall be according to the following Articles of Division 1000 – Materials of the Standard Specifications.

Item	Article/Section
(a) Portland Cement Concrete (Note 1)	1020
(b) Precast Concrete End Sections (Note 2)	
(c) Coarse Aggregate (Note 3)	1004.05
(d) Structural Steel (Note 4)	1006.04
(e) Anchor Bolts and Rods (Note 5)	1006.09
(f) Reinforcement Bars	1006.10(a)
(g) Nonshrink Grout	1024.02
(h) Chemical Adhesive Resin System	1027
(i) Mastic Joint Sealer for Pipe	1055
(j) Hand Hole Plugs	1042.16

Note 1. Cast-in-place concrete end sections shall be Class SI, except the 14 day mix design shall have a compressive strength of 5000 psi (34,500 kPa) or a flexural strength of (800 psi) 5500 kPa and a minimum cement factor of 6.65 cwt/cu yd (395 kg/cu m).

Note 2. Precast concrete end sections shall be according to Articles 1042.02 and 1042.03(b)(c)(d)(e) of the Standard Specifications. The concrete shall be Class PC according to Section 1020, and shall have a minimum compressive strength of 5000 psi (34,000 kPa) at 28 days.

Joints between precast sections shall be produced with reinforced tongue and groove ends according to the requirements of ASTM C 1577.

Note 3. The granular bedding placed below a precast concrete end section shall be gradation CA 6, CA 9, CA 10, CA 12, CA 17, CA 18, or CA 19.

Note 4. All components of the culvert tie detail shall be galvanized according to the requirements of AASHTO M 111 or M 232 as applicable.

Note 5. The anchor rods for the culvert ties shall be according to the requirements of ASTM F 1554, Grade 105 (Grade 725).

CONSTRUCTION REQUIREMENTS

The concrete end sections may be precast or cast-in-place construction. Toe walls shall be either precast or cast-in-place, and shall be in proper position and backfilled according to the applicable paragraphs of Article 502.10 of the Standard Specifications prior to the installation of the concrete end sections. If soil conditions permit, cast-in-place toe walls may be poured directly against the soil. When poured directly against the soil, the clear cover of the sides and bottom of the toe wall shall be increased to 3 in. (75 mm) by increasing the thickness of the toe wall.

(a) Cast-In-Place Concrete End Sections. Cast-in-place concrete end sections shall be constructed according to the requirements of Section 503 of the Standard Specifications and as shown on the plans.

(b) Precast Concrete End Sections. When the concrete end sections will be precast, shop drawings detailing the slab thickness and reinforcement layout shall be submitted to the Engineer for review and approval.

The excavation and backfilling for precast concrete end sections shall be according to the requirements of Section 502 of the Standard Specifications, except a layer of granular bedding at least 6 in. (150 mm) in thickness shall be placed below the elevation of the bottom of the end section. The granular bedding shall extend a minimum of 2 ft (600 mm) beyond each side of the end section.

Anchor rods connecting precast sections shall be brought to a snug tight condition followed by an additional 2/3 turn on one of the nuts. Match marks shall be provided on the bolt and nut to verify relative rotation between the bolt and the nut.

When individual, precast end sections are placed side-by-side for a multi-pipe culvert installation, a 3 in. (75 mm) space shall be left between adjacent end section walls and the space(s) filled with Class SI concrete.

Method of Measurement. This work will be measured for payment as each, with each end of each culvert being one each.

Basis of Payment. This work will be paid for at the contract unit price per each for CONCRETE END SECTION, STANDARD 542001 or CONCRETE END SECTION, 542011, of the pipe diameter and slope specified.

80311

CORRUGATED PLASTIC PIPE (CULVERT AND STORM SEWER) (BDE)

Effective: January 1, 2021

Revise Tables IIIA and IIIB of Article 542.03 and the storm sewers tables of Article 550.03 of the Standard Specifications to read:

(SEE TABLES ON NEXT 10 PAGES)

"PIPE CULVERTS
TABLE IIIA: PLASTIC PIPE PERMITTED
FOR A GIVEN PIPE DIAMETER AND FILL HEIGHT OVER THE TOP OF THE PIPE

Nominal Diameter (in.)	Type 1					Type 2					Type 3					Type 4				
	Fill Height: 3' and less, with 1' min					Fill Height: Greater than 3', not exceeding 10'					Fill Height: Greater than 10', not exceeding 15'					Fill Height: Greater than 15', not exceeding 20'				
	PVC	CPVC	PE	CPE	CPP	PVC	CPVC	PE	CPE	CPP	PVC	CPVC	PE	CPE	CPP	PVC	CPVC	PE	CPE	CPP
10	X	QPL	X	QPL	NA	X	QPL	X	QPL	NA	X	QPL	X	QPL	NA	X	QPL	X	QPL	NA
12	X	QPL	X	QPL	QPL	X	QPL	X	QPL	QPL	X	QPL	X	QPL	QPL	X	QPL	X	QPL	QPL
15	X	QPL	NA	QPL	QPL	X	QPL	NA	QPL	QPL	X	QPL	NA	QPL	QPL	X	QPL	NA	QPL	QPL
18	X	QPL	X	QPL	QPL	X	QPL	X	QPL	QPL	X	QPL	X	QPL	QPL	X	QPL	X	QPL	QPL
21	X	QPL	NA	QPL	NA	X	QPL	NA	QPL	NA	X	QPL	NA	QPL	NA	X	QPL	NA	NA	NA
24	X	QPL	X	QPL	QPL	X	QPL	X	QPL	QPL	X	QPL	X	QPL	QPL	X	QPL	X	NA	QPL
27	X	NA	NA	NA	NA	X	NA	NA	NA	NA	X	NA	NA	NA	NA	X	NA	NA	NA	NA
30	X	QPL	X	QPL	QPL	X	QPL	X	QPL	QPL	X	QPL	X	QPL	QPL	X	QPL	X	NA	QPL
36	X	QPL	X	QPL	QPL	X	QPL	X	QPL	QPL	X	QPL	X	QPL	QPL	X	QPL	X	NA	QPL
42	X	NA	X	QPL	QPL	X	NA	X	QPL	QPL	X	NA	X	NA	QPL	X	NA	X	NA	NA
48	X	NA	X	QPL	QPL	X	NA	X	QPL	QPL	X	NA	X	NA	QPL	X	NA	X	NA	NA
54	NA	NA	NA	NA	NA	NA	NA	NA	NA	NA	NA	NA	NA	NA	NA	NA	NA	NA	NA	NA
60	NA	NA	NA	QPL	QPL	NA	NA	NA	QPL	QPL	NA	NA	NA	NA	QPL	NA	NA	NA	NA	NA

Notes:
- PVC Polyvinyl Chloride Pipe
- CPVC Corrugated Polyvinyl Chloride Pipe with a Smooth Interior
- PE Polyethylene Pipe
- CPE Corrugated Polyethylene Pipe with a Smooth Interior
- CPP Corrugated Polypropylene Pipe with a Smooth Interior
- X Permitted
- QPL Permitted for the producers approved for that diameter in the Department's qualified product list
- NA Not Acceptable

PIPE CULVERTS (metric)
TABLE IIIA: PLASTIC PIPE PERMITTED
FOR A GIVEN PIPE DIAMETER AND FILL HEIGHT OVER THE TOP OF THE PIPE

Nominal Diameter (mm)	Type 1					Type 2					Type 3					Type 4				
	Fill Height: 1 m and less, with 0.3 m min. cover					Fill Height: Greater than 1 m, not exceeding 3 m					Fill Height: Greater than 3 m, not exceeding 4.5 m					Fill Height: Greater than 4.5 m, not exceeding 6 m				
	PVC	CPVC	PE	CPE	CPP	PVC	CPVC	PE	CPE	CPP	PVC	CPVC	PE	CPE	CPP	PVC	CPVC	PE	CPE	CPP
250	X	QPL	X	QPL	NA	X	QPL	X	QPL	NA	X	QPL	X	QPL	NA	X	QPL	X	QPL	NA
300	X	QPL	X	QPL	QPL	X	QPL	X	QPL	QPL	X	QPL	X	QPL	QPL	X	QPL	X	QPL	QPL
375	X	QPL	NA	QPL	QPL	X	QPL	NA	QPL	QPL	X	QPL	NA	QPL	QPL	X	QPL	NA	QPL	QPL
450	X	QPL	X	QPL	QPL	X	QPL	X	QPL	QPL	X	QPL	X	QPL	QPL	X	QPL	X	QPL	QPL
525	X	QPL	NA	QPL	NA	X	QPL	NA	QPL	NA	X	QPL	NA	QPL	NA	X	QPL	NA	NA	NA
600	X	QPL	X	QPL	QPL	X	QPL	X	QPL	QPL	X	QPL	X	QPL	QPL	X	QPL	X	NA	QPL
675	X	NA	NA	NA	NA	X	NA	NA	NA	NA	X	NA	NA	NA	NA	X	NA	NA	NA	NA
750	X	QPL	X	QPL	QPL	X	QPL	X	QPL	QPL	X	QPL	X	QPL	QPL	X	QPL	X	NA	QPL
900	X	QPL	X	QPL	QPL	X	QPL	X	QPL	QPL	X	QPL	X	QPL	QPL	X	QPL	X	NA	QPL
1050	X	NA	X	QPL	QPL	X	NA	X	QPL	QPL	X	NA	X	NA	QPL	X	NA	X	NA	NA
1200	X	NA	X	QPL	QPL	X	NA	X	QPL	QPL	X	NA	X	NA	QPL	X	NA	X	NA	NA
1350	NA	NA	NA	NA	NA	NA	NA	NA	NA	NA	NA	NA	NA	NA	NA	NA	NA	NA	NA	NA
1500	NA	NA	NA	QPL	QPL	NA	NA	NA	QPL	QPL	NA	NA	NA	NA	QPL	NA	NA	NA	NA	NA

Notes:
- PVC Polyvinyl Chloride Pipe
- CPVC Corrugated Polyvinyl Chloride Pipe with a Smooth Interior
- PE Polyethylene Pipe
- CPE Corrugated Polyethylene Pipe with a Smooth Interior
- CPP Corrugated Polypropylene Pipe with a Smooth Interior
- X Permitted
- QPL Permitted for the producers approved for that diameter in the Department's qualified product list
- NA Not Acceptable

PIPE CULVERTS
TABLE IIIB: PLASTIC PIPE PERMITTED
FOR A GIVEN PIPE DIAMETER AND FILL HEIGHT OVER THE TOP OF THE PIPE

Nominal Diameter (in.)	Type 5					Type 6			Type 7		
	Fill Height: Greater than 20', not exceeding 25'					Fill Height: Greater than 25', not exceeding 30'			Fill Height: Greater than 30', not exceeding 35'		
	PVC	CPVC	PE	CPE	CPP	PVC	CPVC	PE	PVC	CPVC	PE
10	X	QPL	X	QPL	NA	X	QPL	X	X	QPL	X
12	X	QPL	X	QPL	QPL	X	QPL	X	X	QPL	X
15	X	QPL	NA	NA	QPL	X	QPL	NA	X	QPL	NA
18	X	QPL	X	NA	NA	X	QPL	X	X	QPL	X
21	X	QPL	NA	NA	NA	X	QPL	NA	X	QPL	NA
24	X	QPL	X	NA	NA	X	QPL	X	X	QPL	X
27	X	NA	NA	NA	NA	X	NA	NA	X	NA	NA
30	X	QPL	X	NA	QPL	X	QPL	X	X	QPL	X
36	X	QPL	X	NA	NA	X	QPL	X	X	QPL	X
42	X	NA	X	NA	NA	X	NA	X	X	NA	X
48	X	NA	X	NA	NA	X	NA	X	X	NA	X
54	NA	NA	NA	NA	NA	NA	NA	NA	NA	NA	NA
60	NA	NA	NA	NA	NA	NA	NA	NA	NA	NA	NA

Notes:
- PVC Polyvinyl Chloride Pipe
- CPVC Corrugated Polyvinyl Chloride Pipe with a Smooth Interior
- CPP Corrugated Polypropylene Pipe with a Smooth Interior
- X Permitted
- QPL Permitted for the producers approved for that diameter in the Department's qualified product list
- NA Not Acceptable

PIPE CULVERTS (metric)
TABLE IIIB: PLASTIC PIPE PERMITTED
FOR A GIVEN PIPE DIAMETER AND FILL HEIGHT OVER THE TOP OF THE PIPE

Nominal Diameter (mm)	Type 5					Type 6			Type 7		
	Fill Height: Greater than 6 m, not exceeding 7.5 m					Fill Height: Greater than 7.5 m, not exceeding 9 m			Fill Height: Greater than 9 m, not exceeding 10.5 m		
	PVC	CPVC	PE	CPE	CPP	PVC	CPVC	PE	PVC	CPVC	PE
250	X	QPL	X	QPL	NA	X	QPL	X	X	QPL	X
300	X	QPL	X	QPL	QPL	X	QPL	X	X	QPL	X
375	X	QPL	NA	NA	QPL	X	QPL	NA	X	QPL	NA
450	X	QPL	X	NA	NA	X	QPL	X	X	QPL	X
525	X	QPL	NA	NA	NA	X	QPL	NA	X	QPL	NA
600	X	QPL	X	NA	NA	X	QPL	X	X	QPL	X
675	X	NA	NA	NA	NA	X	NA	NA	X	NA	NA
750	X	QPL	X	NA	QPL	X	QPL	X	X	QPL	X
900	X	QPL	X	NA	NA	X	QPL	X	X	QPL	X
1000	X	NA	X	NA	NA	X	NA	X	X	NA	X
1200	X	NA	X	NA	NA	X	NA	X	X	NA	X
1350	NA	NA	NA	NA	NA	NA	NA	NA	NA	NA	NA
1500	NA	NA	NA	NA	NA	NA	NA	NA	NA	NA	NA

Notes:
- PVC Polyvinyl Chloride Pipe
- CPVC Corrugated Polyvinyl Chloride Pipe with a Smooth Interior
- CPP Corrugated Polypropylene Pipe with a Smooth Interior
- X Permitted
- QPL Permitted for the producers approved for that diameter in the Department's qualified product list
- NA Not Acceptable

STORM SEWERS
KIND OF MATERIAL PERMITTED AND STRENGTH REQUIRED
FOR A GIVEN PIPE DIAMETERS AND FILL HEIGHTS OVER THE TOP OF THE PIPE

Nominal Diameter in.	Type 1								Type 2							
	Fill Height: 3' and less, with 1' min.								Fill Height: Greater than 3', not exceeding 10'							
	RCCP	CSP	ESCP	PVC	CPVC	PE	CPE	CPP	RCCP	CSP	ESCP	PVC	CPVC	PE	CPE	CPP
10	NA	3	X	X	QPL	X	QPL	NA	NA	1	*X	X	QPL	X	QPL	NA
12	IV	NA	X	X	QPL	X	QPL	QPL	II	1	*X	X	QPL	X	QPL	QPL
15	IV	NA	NA	X	QPL	NA	QPL	QPL	II	1	*X	X	QPL	NA	QPL	QPL
18	IV	NA	NA	X	QPL	X	QPL	QPL	II	2	X	X	QPL	X	QPL	QPL
21	III	NA	NA	X	QPL	NA	QPL	NA	II	2	X	X	QPL	NA	QPL	NA
24	III	NA	NA	X	QPL	X	QPL	QPL	II	2	X	X	QPL	X	QPL	QPL
27	III	NA	NA	X	NA	NA	NA	NA	II	3	X	X	NA	NA	NA	NA
30	IV	NA	NA	X	QPL	X	QPL	QPL	II	3	X	X	QPL	X	QPL	QPL
33	III	NA	NA	NA	NA	NA	NA	NA	II	NA	X	NA	NA	NA	NA	NA
36	III	NA	NA	X	QPL	X	QPL	QPL	II	NA	X	X	QPL	X	QPL	QPL
42	II	NA	X	X	NA	X	QPL	QPL	II	NA	X	X	NA	X	QPL	QPL
48	II	NA	X	X	NA	X	QPL	QPL	II	NA	X	X	NA	X	QPL	QPL
54	II	NA	NA	NA	NA	NA	NA	NA	II	NA	NA	NA	NA	NA	NA	NA
60	II	NA	NA	NA	NA	NA	QPL	QPL	II	NA	NA	NA	NA	NA	QPL	QPL
66	II	NA	NA	NA	NA	NA	NA	NA	II	NA	NA	NA	NA	NA	NA	NA
72	II	NA	NA	NA	NA	NA	NA	NA	II	NA	NA	NA	NA	NA	NA	NA
78	II	NA	NA	NA	NA	NA	NA	NA	II	NA	NA	NA	NA	NA	NA	NA
84	II	NA	NA	NA	NA	NA	NA	NA	II	NA	NA	NA	NA	NA	NA	NA
90	II	NA	NA	NA	NA	NA	NA	NA	II	NA	NA	NA	NA	NA	NA	NA
96	II	NA	NA	NA	NA	NA	NA	NA	III	NA	NA	NA	NA	NA	NA	NA
102	II	NA	NA	NA	NA	NA	NA	NA	III	NA	NA	NA	NA	NA	NA	NA
108	II	NA	NA	NA	NA	NA	NA	NA	III	NA	NA	NA	NA	NA	NA	NA

RCCP Reinforced Concrete Culvert, Storm Drain, and Sewer Pipe
CSP Concrete Sewer, Storm drain, and Culvert Pipe (number in column indicates strength class)
ESCP Extra Strength Clay Pipe
PVC Polyvinyl Chloride Pipe
CPVC Corrugated Polyvinyl Chloride Pipe with a Smooth Interior
PE Polyethylene Pipe
CPE Corrugated Polyethylene Pipe with a Smooth Interior
CPP Corrugated Polypropylene Pipe with a Smooth Interior
X Permitted
QPL Permitted for the producers approved for that diameter in the Department's qualified product list
NA Not Acceptable
* May also use Standard Strength Clay Pipe

STORM SEWERS (metric)
KIND OF MATERIAL PERMITTED AND STRENGTH REQUIRED
FOR A GIVEN PIPE DIAMETERS AND FILL HEIGHTS OVER THE TOP OF THE PIPE

Nominal Diameter mm	Type 1								Type 2							
	Fill Height: 1 m and less, with 300 mm min,								Fill Height: Greater than 1 m, not exceeding 3 m							
	RCCP	CSP	ESCP	PVC	CPVC	PE	CPE	CPP	RCCP	CSP	ESCP	PVC	CPVC	PE	CPE	CPP
250	NA	3	X	X	QPL	X	QPL	NA	NA	1	*X	X	QPL	X	QPL	NA
300	IV	NA	X	X	QPL	X	QPL	QPL	II	1	*X	X	QPL	X	QPL	QPL
375	IV	NA	NA	X	QPL	NA	QPL	QPL	II	1	*X	X	QPL	NA	QPL	QPL
450	IV	NA	NA	X	QPL	X	QPL	QPL	II	2	X	X	QPL	X	QPL	QPL
525	III	NA	NA	X	QPL	NA	QPL	NA	II	2	X	X	QPL	NA	QPL	NA
600	III	NA	NA	X	QPL	X	QPL	QPL	II	2	X	X	QPL	X	QPL	QPL
675	III	NA	NA	X	NA	NA	NA	NA	II	3	X	X	NA	NA	NA	NA
750	IV	NA	NA	X	QPL	X	QPL	QPL	II	3	X	X	QPL	X	QPL	QPL
825	III	NA	NA	NA	NA	NA	NA	NA	II	NA	X	NA	NA	NA	NA	NA
900	III	NA	NA	X	QPL	X	QPL	QPL	II	NA	X	X	QPL	X	QPL	QPL
1050	II	NA	X	X	NA	X	QPL	QPL	II	NA	X	X	NA	X	QPL	QPL
1200	II	NA	X	X	NA	X	QPL	QPL	II	NA	X	X	NA	X	QPL	QPL
1350	II	NA	NA	NA	NA	NA	NA	NA	II	NA	NA	NA	NA	NA	NA	NA
1500	II	NA	NA	NA	NA	NA	QPL	QPL	II	NA	NA	NA	NA	NA	QPL	QPL
1650	II	NA	NA	NA	NA	NA	NA	NA	II	NA	NA	NA	NA	NA	NA	NA
1800	II	NA	NA	NA	NA	NA	NA	NA	II	NA	NA	NA	NA	NA	NA	NA
1950	II	NA	NA	NA	NA	NA	NA	NA	II	NA	NA	NA	NA	NA	NA	NA
2100	II	NA	NA	NA	NA	NA	NA	NA	II	NA	NA	NA	NA	NA	NA	NA
2250	II	NA	NA	NA	NA	NA	NA	NA	II	NA	NA	NA	NA	NA	NA	NA
2400	II	NA	NA	NA	NA	NA	NA	NA	III	NA	NA	NA	NA	NA	NA	NA
2550	II	NA	NA	NA	NA	NA	NA	NA	III	NA	NA	NA	NA	NA	NA	NA
2700	II	NA	NA	NA	NA	NA	NA	NA	III	NA	NA	NA	NA	NA	NA	NA

RCCP Reinforced Concrete Culvert, Storm Drain, and Sewer Pipe
CSP Concrete Sewer, Storm drain, and Culvert Pipe (number in column indicates strength class)
ESCP Extra Strength Clay Pipe
PVC Polyvinyl Chloride Pipe
CPVC Corrugated Polyvinyl Chloride Pipe with a Smooth Interior
PE Polyethylene Pipe
CPE Corrugated Polyethylene Pipe with a Smooth Interior
CPP Corrugated Polypropylene Pipe with a Smooth Interior
X Permitted
QPL Permitted for the producers approved for that diameter in the Department's qualified product list
NA Not Acceptable
* May also use Standard Strength Clay Pipe

STORM SEWERS
KIND OF MATERIAL PERMITTED AND STRENGTH REQUIRED
FOR A GIVEN PIPE DIAMETERS AND FILL HEIGHTS OVER THE TOP OF THE PIPE

Nominal Diameter in.	Type 3								Type 4							
	Fill Height: Greater than 10' not exceeding 15'								Fill Height: Greater than 15' not exceeding 20'							
	RCCP	CSP	ESCP	PVC	CPVC	PE	CPE	CPP	RCCP	CSP	ESCP	PVC	CPVC	PE	CPE	CPP
10	NA	2	X	X	QPL	X	QPL	NA	NA	3	X	X	QPL	X	QPL	NA
12	III	2	X	X	QPL	X	QPL	QPL	IV	NA	NA	X	QPL	X	QPL	QPL
15	III	3	X	X	QPL	NA	QPL	QPL	IV	NA	NA	X	QPL	NA	QPL	QPL
18	III	NA	X	X	QPL	X	QPL	QPL	IV	NA	NA	X	QPL	X	QPL	QPL
21	III	NA	NA	X	QPL	NA	QPL	NA	IV	NA	NA	X	QPL	NA	NA	NA
24	III	NA	NA	X	QPL	X	QPL	QPL	IV	NA	NA	X	QPL	X	NA	QPL
27	III	NA	NA	X	NA	NA	NA	NA	IV	NA	NA	X	NA	NA	NA	NA
30	III	NA	NA	X	QPL	X	QPL	QPL	IV	NA	NA	X	QPL	X	NA	QPL
33	III	NA	NA	NA	NA	NA	NA	NA	IV	NA	NA	NA	NA	NA	NA	NA
36	III	NA	NA	X	QPL	X	QPL	QPL	IV	NA	NA	X	QPL	X	NA	QPL
42	III	NA	NA	X	NA	X	NA	QPL	IV	NA	NA	X	NA	X	NA	NA
48	III	NA	NA	X	NA	X	NA	QPL	IV	NA	NA	X	NA	X	NA	NA
54	III	NA	NA	NA	NA	NA	NA	NA	IV	NA	NA	NA	NA	NA	NA	NA
60	III	NA	NA	NA	NA	NA	NA	QPL	IV	NA	NA	NA	NA	NA	NA	NA
66	III	NA	NA	NA	NA	NA	NA	NA	IV	NA	NA	NA	NA	NA	NA	NA
72	III	NA	NA	NA	NA	NA	NA	NA	IV	NA	NA	NA	NA	NA	NA	NA
78	III	NA	NA	NA	NA	NA	NA	NA	IV	NA	NA	NA	NA	NA	NA	NA
84	III	NA	NA	NA	NA	NA	NA	NA	IV	NA	NA	NA	NA	NA	NA	NA
90	III	NA	NA	NA	NA	NA	NA	NA	1680	NA	NA	NA	NA	NA	NA	NA
96	III	NA	NA	NA	NA	NA	NA	NA	1690	NA	NA	NA	NA	NA	NA	NA
102	III	NA	NA	NA	NA	NA	NA	NA	1700	NA	NA	NA	NA	NA	NA	NA
108	1360	NA	NA	NA	NA	NA	NA	NA	1710	NA	NA	NA	NA	NA	NA	NA

RCCP Reinforced Concrete Culvert, Storm Drain, and Sewer Pipe (RCCP with a number instead of a Roman numeral shall be furnished according to AASHTO M170 Section 6. This number represents the D-load to produce a 0.01 in crack.)
CSP Concrete Sewer, Storm drain, and Culvert Pipe (number in column indicates strength class)
ESCP Extra Strength Clay Pipe
PVC Polyvinyl Chloride Pipe
CPVC Corrugated Polyvinyl Chloride Pipe with a Smooth Interior
PE Polyethylene Pipe
CPE Corrugated Polyethylene Pipe with a Smooth Interior
CPP Corrugated Polypropylene Pipe with a Smooth Interior
X Permitted
QPL Permitted for the producers approved for that diameter in the Department's qualified product list
NA Not Acceptable

STORM SEWERS (metric)
KIND OF MATERIAL PERMITTED AND STRENGTH REQUIRED
FOR A GIVEN PIPE DIAMETERS AND FILL HEIGHTS OVER THE TOP OF THE PIPE

Nominal Diameter mm	Type 3								Type 4							
	Fill Height: Greater than 3 m, not exceeding 4.5 m								Fill Height: Greater than 4.5 m, not exceeding 6 m							
	RCCP	CSP	ESCP	PVC	CPVC	PE	CPE	CPP	RCCP	CSP	ESCP	PVC	CPVC	PE	CPE	CPP
250	NA	2	X	X	QPL	X	QPL	NA	NA	3	X	X	QPL	X	QPL	NA
300	III	2	X	X	QPL	X	QPL	QPL	IV	NA	NA	X	QPL	X	QPL	QPL
375	III	3	X	X	QPL	NA	QPL	QPL	IV	NA	NA	X	QPL	NA	QPL	QPL
450	III	NA	X	X	QPL	X	QPL	QPL	IV	NA	NA	X	QPL	X	QPL	QPL
525	III	NA	NA	X	QPL	NA	QPL	NA	IV	NA	NA	X	QPL	NA	NA	NA
600	III	NA	NA	X	QPL	X	QPL	QPL	IV	NA	NA	X	QPL	X	NA	QPL
675	III	NA	NA	X	NA	NA	NA	NA	IV	NA	NA	X	NA	NA	NA	NA
750	III	NA	NA	X	QPL	X	QPL	QPL	IV	NA	NA	X	QPL	X	NA	QPL
825	III	NA	NA	NA	NA	NA	NA	NA	IV	NA	NA	NA	NA	NA	NA	NA
900	III	NA	NA	X	QPL	X	QPL	QPL	IV	NA	NA	X	QPL	X	NA	QPL
1050	III	NA	NA	X	NA	X	NA	QPL	IV	NA	NA	X	NA	X	NA	NA
1200	III	NA	NA	X	NA	X	NA	QPL	IV	NA	NA	X	NA	X	NA	NA
1350	III	NA	NA	NA	NA	NA	NA	NA	IV	NA	NA	NA	NA	NA	NA	NA
1500	III	NA	NA	NA	NA	NA	NA	QPL	IV	NA	NA	NA	NA	NA	NA	NA
1650	III	NA	NA	NA	NA	NA	NA	NA	IV	NA	NA	NA	NA	NA	NA	NA
1800	III	NA	NA	NA	NA	NA	NA	NA	IV	NA	NA	NA	NA	NA	NA	NA
1950	III	NA	NA	NA	NA	NA	NA	NA	IV	NA	NA	NA	NA	NA	NA	NA
2100	III	NA	NA	NA	NA	NA	NA	NA	IV	NA	NA	NA	NA	NA	NA	NA
2250	III	NA	NA	NA	NA	NA	NA	NA	80	NA	NA	NA	NA	NA	NA	NA
2400	III	NA	NA	NA	NA	NA	NA	NA	80	NA	NA	NA	NA	NA	NA	NA
2550	III	NA	NA	NA	NA	NA	NA	NA	80	NA	NA	NA	NA	NA	NA	NA
2700	70	NA	NA	NA	NA	NA	NA	NA	80	NA	NA	NA	NA	NA	NA	NA

RCCP Reinforced Concrete Culvert, Storm Drain, and Sewer Pipe (RCCP with a number instead of a Roman numeral shall be furnished according to AASHTO M170 Section 6. This number represents the D-load to produce a 25.4 micro-meter crack.)
CSP Concrete Sewer, Storm drain, and Culvert Pipe (number in column indicates strength class)
ESCP Extra Strength Clay Pipe
PVC Polyvinyl Chloride Pipe
CPVC Corrugated Polyvinyl Chloride Pipe with a Smooth Interior
PE Polyethylene Pipe
CPE Corrugated Polyethylene Pipe with a Smooth Interior
CPP Corrugated Polypropylene Pipe with a Smooth Interior
X Permitted
QPL Permitted for the producers approved for that diameter in the Department's qualified product list
NA Not Acceptable

STORM SEWERS
KIND OF MATERIAL PERMITTED AND STRENGTH REQUIRED
FOR A GIVEN PIPE DIAMETERS AND FILL HEIGHTS OVER THE TOP OF THE PIPE

Nominal Diameter in.	Type 5						Type 6				Type 7			
	Fill Height: Greater than 20', not exceeding 25'						Fill Height: Greater than 25', not exceeding 30'				Fill Height: Greater than 30', not exceeding 35'			
	RCCP	PVC	CPVC	PE	CPE	CPP	RCCP	PVC	CPVC	PE	RCCP	PVC	CPVC	PE
10	NA	X	QPL	X	QPL	NA	NA	X	QPL	X	NA	X	QPL	X
12	IV	X	QPL	X	QPL	QPL	V	X	QPL	X	V	X	QPL	X
15	IV	X	QPL	NA	NA	QPL	V	X	QPL	NA	V	X	QPL	NA
18	IV	X	QPL	X	NA	NA	V	X	QPL	X	V	X	QPL	X
21	IV	X	QPL	NA	NA	NA	V	X	QPL	NA	V	X	QPL	NA
24	IV	X	QPL	X	NA	NA	V	X	QPL	X	V	X	QPL	X
27	IV	X	NA	NA	NA	NA	V	X	NA	NA	V	X	NA	NA
30	IV	X	QPL	X	NA	QPL	V	X	QPL	X	V	X	QPL	X
33	IV	NA	NA	NA	NA	NA	V	NA	NA	NA	V	NA	NA	NA
36	IV	X	QPL	X	NA	NA	V	X	QPL	X	V	X	QPL	X
42	IV	X	NA	X	NA	NA	V	X	NA	X	V	X	NA	X
48	IV	X	NA	X	NA	NA	V	X	NA	X	V	X	NA	X
54	IV	NA	NA	NA	NA	NA	V	NA	NA	NA	V	NA	NA	NA
60	IV	NA	NA	NA	NA	NA	V	NA	NA	NA	V	NA	NA	NA
66	IV	NA	NA	NA	NA	NA	V	NA	NA	NA	V	NA	NA	NA
72	V	NA	NA	NA	NA	NA	V	NA	NA	NA	V	NA	NA	NA
78	2020	NA	NA	NA	NA	NA	2370	NA	NA	NA	2730	NA	NA	NA
84	2020	NA	NA	NA	NA	NA	2380	NA	NA	NA	2740	NA	NA	NA
90	2030	NA	NA	NA	NA	NA	2390	NA	NA	NA	2750	NA	NA	NA
96	2040	NA	NA	NA	NA	NA	2400	NA	NA	NA	2750	NA	NA	NA
102	2050	NA	NA	NA	NA	NA	2410	NA	NA	NA	2760	NA	NA	NA
108	2060	NA	NA	NA	NA	NA	2410	NA	NA	NA	2770	NA	NA	NA

RCCP Reinforced Concrete Culvert, Storm Drain, and Sewer Pipe (RCCP with a number instead of a Roman numeral shall be furnished according to AASHTO M170 Section 6. This number represents the D-load to produce a 0.01 in crack.)
PVC Polyvinyl Chloride Pipe
CPVC Corrugated Polyvinyl Chloride Pipe with a Smooth Interior
PE Polyethylene Pipe
CPE Corrugated Polyethylene Pipe with a Smooth Interior
CPP Corrugated Polypropylene Pipe with a Smooth Interior
X Permitted
QPL Permitted for the producers approved for that diameter in the Department's qualified product list
NA Not Acceptable

STORM SEWERS (metric)
KIND OF MATERIAL PERMITTED AND STRENGTH REQUIRED
FOR A GIVEN PIPE DIAMETERS AND FILL HEIGHTS OVER THE TOP OF THE PIPE

Nominal Diameter mm	Type 5						Type 6				Type 7			
	Fill Height: Greater than 6 m, not exceeding 7.5 m						Fill Height: Greater than 7.5 m, not exceeding 9 m				Fill Height: Greater than 9 m, not exceeding 10.5 m			
	RCCP	PVC	CPVC	PE	CPE	CPP	RCCP	PVC	CPVC	PE	RCCP	PVC	CPVC	PE
250	NA	X	QPL	X	QPL	NA	NA	X	QPL	X	NA	X	QPL	X
300	IV	X	QPL	X	QPL	QPL	V	X	QPL	X	V	X	QPL	X
375	IV	X	QPL	NA	NA	QPL	V	X	QPL	NA	V	X	QPL	NA
450	IV	X	QPL	X	NA	NA	V	X	QPL	X	V	X	QPL	X
525	IV	X	QPL	NA	NA	NA	V	X	QPL	NA	V	X	QPL	NA
600	IV	X	QPL	X	NA	NA	V	X	QPL	X	V	X	QPL	X
675	IV	X	NA	NA	NA	NA	V	X	NA	NA	V	X	NA	NA
750	IV	X	QPL	X	NA	QPL	V	X	QPL	X	V	X	QPL	X
825	IV	NA	NA	NA	NA	NA	V	NA	NA	NA	V	NA	NA	NA
900	IV	X	QPL	X	NA	NA	V	X	QPL	X	V	X	QPL	X
1050	IV	X	NA	X	NA	NA	V	X	NA	X	V	X	NA	X
1200	IV	X	NA	X	NA	NA	V	X	NA	X	V	X	NA	X
1350	IV	NA	NA	NA	NA	NA	V	NA	NA	NA	V	NA	NA	NA
1500	IV	NA	NA	NA	NA	NA	V	NA	NA	NA	V	NA	NA	NA
1650	IV	NA	NA	NA	NA	NA	V	NA	NA	NA	V	NA	NA	NA
1800	V	NA	NA	NA	NA	NA	V	NA	NA	NA	V	NA	NA	NA
1950	100	NA	NA	NA	NA	NA	110	NA	NA	NA	130	NA	NA	NA
2100	100	NA	NA	NA	NA	NA	110	NA	NA	NA	130	NA	NA	NA
2250	100	NA	NA	NA	NA	NA	110	NA	NA	NA	130	NA	NA	NA
2400	100	NA	NA	NA	NA	NA	120	NA	NA	NA	130	NA	NA	NA
2550	100	NA	NA	NA	NA	NA	120	NA	NA	NA	130	NA	NA	NA
2700	100	NA	NA	NA	NA	NA	120	NA	NA	NA	130	NA	NA	NA

RCCP Reinforced Concrete Culvert, Storm Drain, and Sewer Pipe (RCCP with a number instead of a Roman numeral shall be furnished according to AASHTO M170 Section 6. This number represents the D-load to produce a 25.4 micro-meter crack.)
PVC Polyvinyl Chloride Pipe
CPVC Corrugated Polyvinyl Chloride Pipe with a Smooth Interior
PE Polyethylene Pipe
CPE Corrugated Polyethylene Pipe with a Smooth Interior
CPP Corrugated Polypropylene Pipe with a Smooth Interior
X Permitted
QPL Permitted for the producers approved for that diameter in the Department's qualified product list
NA Not Acceptable"

Revise the first paragraph of Article 1040.03 of the Standard Specifications to read:

"**1040.03 Polyvinyl Chloride (PVC) Pipe.** Acceptance testing of PVC pipe and fittings shall be accomplished during the same construction season in which they are installed. The pipe shall meet the following additional requirements."

Revise Article 1040.04(b) of the Standard Specifications to read:

"(b) Corrugated PE Pipe with a Smooth Interior. The manufacturer shall be listed as compliant through the NTPEP program and the pipe shall be according to AASHTO M 294 (nominal size – 12 to 60 in. (300 to 1500 mm)). The pipe shall be Type S or D."

Revise the first paragraph of Article 1040.04(d) of the Standard Specifications to read:

"(d) PE Pipe with a Smooth Interior. The pipe shall be according to ASTM F 714 (DR 32.5) with a minimum cell classification of PE 335434 as defined in ASTM D 3350."

Revise the first paragraph of Article 1040.08 of the Standard Specifications to read:

"**1040.08 Polypropylene (PP) Pipe.** Storage and handling shall be according to the manufacturer's recommendations, except in no case shall the pipe be exposed to direct sunlight for more than six months. Acceptance testing of the pipe shall be accomplished during the same construction season in which it is installed. The pipe shall meet the following additional requirements."

80434

DISPOSAL FEES (BDE)

Effective: November 1, 2018

Replace Articles 109.04(b)(5) – 109.04(b)(8) of the Standard Specifications with the following:

"(5) Disposal Fees. When the extra work performed includes paying for disposal fees at a clean construction and demolition debris facility, an uncontaminated soil fill operation or a landfill, the Contractor shall receive, as administrative costs, an amount equal to five percent of the first $10,000 and one percent of any amount over $10,000 of the total approved costs of such fees.

(6) Miscellaneous. No additional allowance will be made for general superintendence, the use of small tools, or other costs for which no specific allowance is herein provided.

(7) Statements. No payment will be made for work performed on a force account basis until the Contractor has furnished the Engineer with itemized statements of the cost of such force account work. Statements shall be accompanied and supported by invoices for all materials used and transportation charges. However, if materials used on the force account work are not specifically purchased for such work but are taken from the Contractor's stock, then in lieu of the invoices, the Contractor shall furnish an affidavit certifying that such materials were taken from his/her stock, that the quantity claimed was actually used. and that the price and transportation claimed represent the actual cost to the Contractor.

Itemized statements at the cost of force account work shall be detailed as follows.

a. Name, classification, date, daily hours, total hours, rate, and extension for each laborer and foreman. Payrolls shall be submitted to substantiate actual wages paid if so requested by the Engineer.

b. Designation, dates, daily hours, total hours, rental rate, and extension for each unit of machinery and equipment.

c. Quantities of materials, prices and extensions.

d. Transportation of materials.

e. Cost of property damage, liability and workmen's compensation insurance premiums, unemployment insurance contributions, and social security tax.

(8) Work Performed by an Approved Subcontractor. When extra work is performed by an approved subcontractor, the Contractor shall receive, as administrative costs, an amount equal to five percent of the total approved costs of such work with the minimum payment being $100.

(9) All statements of the cost of force account work shall be furnished to the Engineer not later than 60 days after receipt of the Central Bureau of Construction form "Extra Work Daily Report". If the statement is not received within the specified time frame, all demands for payment for the extra work are waived and the Department is released from any and all such demands. It is the responsibility of the Contractor to ensure that all statements are received within the specified time regardless of the manner or method of delivery."

80402

EMULSIFIED ASPHALTS (BDE)

Effective: August 1, 2019

Revise Article 1032.06 of the Standard Specifications to read:

"**1032.06 Emulsified Asphalts.** Emulsified asphalts will be accepted according to the current Bureau of Materials Policy Memorandum, "Emulsified Asphalt Acceptance Procedure". These materials shall be homogeneous and shall show no separation of asphalt after thorough mixing, within 30 days after delivery, provided separation has not been caused by freezing. They shall coat the aggregate being used in the work to the satisfaction of the Engineer and shall be according to the following requirements.

(a) Anionic Emulsified Asphalt. Anionic emulsified asphalts RS-1, RS-2, HFRS-2, SS-1h, and SS-1 shall be according to AASHTO M 140, except as follows.

(1) The cement mixing test will be waived when the emulsion is being used as a tack coat.

(2) The Solubility in Trichloroethylene test according to AASHTO T 44 may be run in lieu of Ash Content and shall meet a minimum of 97.5 percent.

(b) Cationic Emulsified Asphalt. Cationic emulsified asphalts CRS-1, CRS-2, CSS-1h, and CSS-1 shall be according to AASHTO M 208, except as follows.

(1) The cement mixing test will be waived when the emulsion is being used as a tack coat.

(2) The Solubility in Trichloroethylene test according to AASHTO T 44 may be run in lieu of Ash Content and shall meet a minimum of 97.5 percent.

(c) High Float Emulsion. High float emulsions HFE-90, HFE-150, and HFE-300 are medium setting and shall be according to the following table.

Test	HFE-90	HFE-150	HFE-300
Viscosity, Saybolt Furol, at 122 °F (50 °C), (AASHTO T 59), SFS [1/]	50 min.	50 min.	50 min.
Sieve Test, No. 20 (850 µm), retained on sieve, (AASHTO T 59), %	0.10 max.	0.10 max.	0.10 max.
Storage Stability Test, 1 day, (AASHTO T 59), %	1 max.	1 max.	1 max.
Coating Test (All Grades), (AASHTO T 59), 3 minutes	stone coated thoroughly		
Distillation Test, (AASHTO T 59):			
Residue from distillation test to 500 °F (260 °C), %	65 min.	65 min.	65 min.
Oil distillate by volume, %	7 max.	7 max.	7 max.

Characteristics of residue from distillation test to 500 °F (260 °C): Penetration at 77 °F (25 °C), (AASHTO T 49), 100 g, 5 sec, dmm	90-150	150-300	300 min.
Float Test at 140 °F (60 °C), (AASHTO T 50), sec.	1200 min.	1200 min.	1200 min.

1/ The emulsion shall be pumpable.

(d) Penetrating Emulsified Prime. Penetrating Emulsified Prime (PEP) shall be according to AASHTO T 59, except as follows.

Test	Result
Viscosity, Saybolt Furol, at 77 °F (25 °C), SFS	75 max.
Sieve test, retained on No. 20 (850 µm) sieve, %	0.10 max.
Distillation to 500 °F (260 °C) residue, %	38 min.
Oil distillate by volume, %	4 max.

The PEP shall be tested according to the current Bureau of Materials Illinois Laboratory Test Procedure (ILTP), "Sand Penetration Test of Penetrating Emulsified Prime (PEP)". The time of penetration shall be equal to or less than that of MC-30. The depth of penetration shall be equal to or greater than that of MC-30.

(e) Delete this subparagraph.

(f) Polymer Modified Emulsified Asphalt. Polymer modified emulsified asphalts, e.g. SS-1hP, CSS-1hP, CRS-2P (formerly CRSP), CQS-1hP (formerly CSS-1h Latex Modified) and HFRS-2P (formerly HFP) shall be according to AASHTO M 316, except as follows.

(1) The cement mixing test will be waived when the polymer modified emulsion is being used as a tack coat.

(2) CQS-1hP (formerly CSS-1h Latex Modified) emulsion for micro-surfacing treatments shall use latex as the modifier.

(3) Upon examination of the storage stability test cylinder after standing undisturbed for 24 hours, the surface shall show minimal to no white, milky colored substance and shall be a homogenous brown color throughout.

(4) The distillation for all polymer modified emulsions shall be performed according to AASHTO T 59, except the temperature shall be 374 ± 9 °F (190 ± 5 °C) to be held for a period of 15 minutes and measured using an ASTM 16F (16C) thermometer.

(5) The specified temperature for the Elastic Recovery test for all polymer modified emulsions shall be 50.0 ± 1.0 °F (10.0 ± 0.5 °C).

(6) The Solubility in Trichloroethylene test according to AASHTO T 44 may be run in lieu of Ash Content and shall meet a minimum of 97.5 percent.

(g) Non-Tracking Emulsified Asphalt. Non-tracking emulsified asphalt NTEA (formerly SS-1vh) shall be according to the following.

Test	Requirement
Saybolt Viscosity at 77 °F (25 °C), (AASHTO T 59), SFS	20-100
Storage Stability Test, 24 hr, (AASHTO T 59), %	1 max.
Residue by Distillation, 500 ± 10 °F (260 ± 5 °C), or Residue by Evaporation, 325 ± 5 °F (163 ± 3 °C), (AASHTO T 59), %	50 min.
Sieve Test, No. 20 (850 µm), (AASHTO T 59), %	0.3 max.
Tests on Residue from Evaporation	
Penetration at 77 °F (25 °C), 100 g, 5 sec, (AASHTO T 49), dmm	40 max.
Softening Point, (AASHTO T 53), °F (°C)	135 (57) min.
Ash Content, (AASHTO T 111), % 1/	1 max.

1/ The Solubility in Trichloroethylene test according to AASHTO T 44 may be run in lieu of Ash Content and shall meet a minimum of 97.5 percent

The different grades are, in general, used for the following.

Grade	Use
SS-1, SS-1h, RS-1, RS-2, CSS-1, CRS-1, CRS-2, CSS-1h, HFE-90, SS-1hP, CSS-1hP, NTEA (formerly SS-1vh)	Tack Coat
PEP	Prime Coat
RS-2, HFE-90, HFE-150, HFE-300, CRS-2P (formerly CRSP), HFRS-2P (formerly HFP), CRS-2, HFRS-2	Bituminous Surface Treatment
CQS-1hP (formerly CSS-1h Latex Modified)	Micro-Surfacing Slurry Sealing Cape Seal"

80415

HOT-MIX ASPHALT – BINDER AND SURFACE COURSE (BDE)

Effective: July 2, 2019
Revised: November 1, 2019

Description. This work shall consist of constructing a hot-mix asphalt (HMA) binder and/or surface course on a prepared base. Work shall be according to Sections 406 and 1030 of the Standard Specifications, except as modified herein.

Materials. Add the following after the second paragraph of Article 1003.03(c):

"For mixture IL-9.5FG, at least 67 percent of the required fine aggregate fraction shall consist of either stone sand, slag sand, steel slag sand, or combinations thereof meeting FA 20 gradation."

Revise Article 1004.03(c) to read:

"(c) Gradation. The coarse aggregate gradations shall be as listed in the following table.

Use	Size/Application	Gradation No.
Class A-1, A-2, & A-3	3/8 in. (10 mm) Seal	CA 16 or CA 20
Class A-1	1/2 in. (13 mm) Seal	CA 15
Class A-2 & A-3	Cover Coat	CA 14
HMA High ESAL	IL-19.0	CA 11 1/
	SMA 12.5 2/	CA 13, CA 14, or CA 16
	SMA 9.5 2/	CA 13 or CA 16 3/
	IL-9.5	CA 16
	IL-9.5FG	CA 16
HMA Low ESAL	IL-19.0L	CA 11 1/
	IL-9.5L	CA 16

1/ CA 16 or CA 13 may be blended with the CA 11.

2/ The coarse aggregates used shall be capable of being combined with stone sand, slag sand, or steel slag sand meeting the FA/FM 20 gradation and mineral filler to meet the approved mix design and the mix requirements noted herein.

3/ The specified coarse aggregate gradations may be blended."

HMA Nomenclature. Revise the "High ESAL" portion of the table in Article 1030.01 to read:

"High ESAL	Binder Courses	IL-19.0, IL-9.5, IL-9.5FG, IL-4.75, SMA 12.5, SMA 9.5

	Surface Courses	IL-9.5, IL-9.5FG, SMA 12.5, SMA 9.5"

Mixture Design. Revise the table in Article 1030.04(a)(1) and add SMA 9.5 and IL-9.5FG mixture compositions as follows:

"HIGH ESAL, MIXTURE COMPOSITION (% PASSING) 1/						
Sieve Size	SMA 12.5 5/		SMA 9.5 5/		IL-9.5FG	
	min.	max.	min.	max.	min.	max.
1 in. (25 mm)						
3/4 in. (19 mm)		100		100		
1/2 in. (12.5 mm)	90	99	95	100		100
3/8 in. (9.5 mm)	50	85	70	95	90	100
#4 4.75 mm)	20	40	30	50	60	75
#8 (2.36 mm)	16	24 4/	20	30	45	60
#16 (1.18 mm)				21	25	40
#30 (600 µm)				18	15	30
#50 (300 µm)				15	8	15
#100 (150 µm)					6	10
#200 (75 µm)	8.0	11.0 3/	8.0	11.0 3/	4.0	6.5
#635 (20 µm)		≤ 3.0		≤ 3.0		
Ratio of Dust/Asphalt Binder						1.0

1/ Based on percent of total aggregate weight.

2/ The mixture composition shall not exceed 44 percent passing the #8 (2.36 mm) sieve for surface courses with Ndesign = 90.

3/ Additional minus No. 200 (0.075 mm) material required by the mix design shall be mineral filler, unless otherwise approved by the Engineer.

4/ When establishing the adjusted job mix formula (AJMF) the percent passing the #8 (2.36 mm) sieve shall not be adjusted above 24 percent.

5/ When the bulk specific gravity (Gsb) of the component aggregates vary by more than 0.2, the blend gradations shall be based on volumetric percentage."

Revise the table in Article 1030.04(b)(1) to read:

"VOLUMETRIC REQUIREMENTS, High ESAL				
Ndesign	Voids in the Mineral Aggregate (VMA), % minimum			Voids Filled with Asphalt Binder (VFA),%
	IL-19.0	IL-9.5 IL-9.5FG	IL-4.75 1/	
50	13.5	15.0	18.5	65 - 78 2/
70				65 – 75 3/
90				

1/ Maximum draindown for IL-4.75 shall be 0.3 percent.

2/ VFA for IL-4.75 shall be 76-83 percent.

3/ VFA for IL-9.5FG shall be 65-78 percent."

Revise the table in Article 1030.04(b)(3) to read:

"VOLUMETRIC REQUIREMENTS, SMA 12.5 1/ and SMA 9.5 1/				
ESALs (million)	Ndesign	Design Air Voids Target, %	Voids in the Mineral Aggregate (VMA), % min.	Voids Filled with Asphalt (VFA), %
≤ 10	50	4.0	16.0	75 – 80
> 10	80	4.0	17.0	75 – 80

1/ Maximum draindown shall be 0.3 percent."

Quality Control/Quality Assurance (QC/QA). Revise the third paragraph of Article 1030.05(d)(3) to read:

"If the Contractor and Engineer agree the nuclear density test method is not appropriate for the mixture, cores shall be taken at random locations determined according to the

QC/QA document "Determination of Random Density Test Site Locations". Core densities shall be determined using the Illinois Modified AASHTO T 166 or T 275 procedure."

Add the following paragraphs to the end of Article 1030.05(d)(3):

"Longitudinal joint density testing shall be performed at each random density test location. Longitudinal joint testing shall be located at a distance equal to the lift thickness or a minimum of 4 in. (100 mm), from each pavement edge (i.e. for a 5 in. (125 mm) lift the near edge of the density gauge or core barrel shall be within 5 in. (125 mm) from the edge of pavement). Longitudinal joint density testing shall be performed using either a correlated nuclear gauge or cores.

a. Confined Edge. Each confined edge density shall be represented by a one-minute nuclear density reading or a core density and shall be included in the average of density readings or core densities taken across the mat which represents the Individual Test.

b. Unconfined Edge. Each unconfined edge joint density shall be represented by an average of three one-minute density readings or a single core density at the given density test location and shall meet the density requirements specified herein. The three one-minute readings shall be spaced 10 ft (3 m) apart longitudinally along the unconfined pavement edge and centered at the random density test location.

When a longitudinal joint sealant (LJS) is applied, longitudinal joint density testing will not be required on the joint(s) sealed."

Revise the second table in Article 1030.05(d)(4) and its notes to read:

"DENSITY CONTROL LIMITS			
Mixture Composition	Parameter	Individual Test (includes confined edges)	Unconfined Edge Joint Density, minimum
IL-4.75	Ndesign = 50	93.0 – 97.4 % 1/	91.0%
IL-9.5FG	Ndesign = 50 - 90	93.0 – 97.4 %	91.0%
IL-9.5	Ndesign = 90	92.0 – 96.0 %	90.0%
IL-9.5, IL-9.5L,	Ndesign < 90	92.5 – 97.4 %	90.0%
IL-19.0	Ndesign = 90	93.0 – 96.0 %	90.0%
IL-19.0, IL-19.0L	Ndesign < 90	93.0 2/ – 97.4 %	90.0%
SMA	Ndesign = 50 or 80	93.5 – 97.4 %	91.0%

1/ Density shall be determined by cores or by correlated, approved thin lift nuclear gauge.

2/ 92.0 % when placed as first lift on an unimproved subgrade."

Equipment. Add the following to Article 1101.01 of the Standard Specifications:

"(h) Oscillatory Roller. The oscillatory roller shall be self-propelled and provide a smooth operation when starting, stopping, or reversing directions. The oscillatory roller shall be able to operate in a mode that will provide tangential impact force with or without vertical impact force by using at least one drum. The oscillatory roller shall be equipped with water tanks and sprinkling devices, or other approved methods, which shall be used to wet the drums to prevent material pickup. The drum(s) amplitude and frequency of the tangential and vertical impact force shall be approximately the same in each direction and meet the following requirements:

(1) The minimum diameter of the drum(s) shall be 42 in. (1070 mm);

(2) The minimum length of the drum(s) shall be 57 in. (1480 mm);

(3) The minimum unit static force on the drum(s) shall be 125 lb/in. (22 N/m); and

(4) The minimum force on the oscillatory drum shall be 18,000 lb (80 kN)."

CONSTRUCTION REQUIREMENTS

Add the following to Article 406.03 of the Standard Specifications:

"(j) Oscillatory Roller ..... 1101.01"

Revise the third paragraph of Article 406.05(a) to read:

"All depressions of 1 in. (25 mm) or more in the surface of the existing pavement shall be filled with binder. At locations where heavy disintegration and deep spalling exists, the area shall be cleaned of all loose and unsound material, tacked, and filled with binder (hand method)."

Revise Article 406.05(c) to read.

"(c) Binder (Hand Method). Binder placed other than with a finishing machine will be designated as binder (hand method) and shall be compacted with a roller to the satisfaction of the Engineer. Hand tamping will be permitted when approved by the Engineer."

Revise the special conditions for mixture IL-4.75 in Article 406.06(b)(2)e. to read:

"e. The mixture shall be overlaid within 5 days of being placed."

Revise Article 406.06(d) to read:

"(d) Lift Thickness. The minimum compacted lift thickness for HMA binder and surface courses shall be as follows.

MINIMUM COMPACTED LIFT THICKNESS	
Mixture Composition	Thickness, in. (mm)
IL-4.75	3/4 (19) - over HMA surfaces [1/] 1 (25) - over PCC surfaces [1/]
IL-9.5FG	1 1/4 (32)
IL-9.5, IL-9.5L	1 1/2 (38)
SMA 9.5	1 1/2 (38)
SMA 12.5	2 (51)
IL-19.0, IL-19.0L	2 1/4 (57)

1/ The maximum compacted lift thickness for mixture IL-4.75 shall be 1 1/4 in. (32 mm)."

Revise Table 1 and Note 3/ of Table 1 in Article 406.07(a) of the Standard Specifications to read:

"TABLE 1 - MINIMUM ROLLER REQUIREMENTS FOR HMA				
	Breakdown Roller (one of the following)	Intermediate Roller	Final Roller (one or more of the following)	Density Requirement
Binder and Surface [1/]	V_D, P [3/], T_B, 3W, O_T, O_B	P [3/], O_T, O_B	V_S, T_B, T_F, O_T	As specified in Articles: 1030.05(d)(3), (d)(4), and (d)(7).
IL-4.75 and SMA [4/ 5/]	T_B, 3W, O_T	- -	T_F, 3W, O_T	
Bridge Decks [2/]	T_B	- -	T_F	As specified in Articles 582.05 and 582.06.

3/ A vibratory roller (V_D) or oscillatory roller (O_T or O_B) may be used in lieu of the pneumatic-tired roller on mixtures containing polymer modified asphalt binder."

Add the following to EQUIPMENT DEFINITION in Article 406.07(a) contained in the Errata of the Supplemental Specifications:

"O_T - Oscillatory roller, tangential impact mode. Maximum speed is 3.0 mph (4.8 km/h) or 264 ft/min (80 m/min).

O_B - Oscillatory roller, tangential and vertical impact mode, operated at a speed to produce not less than 10 vertical impacts/ft (30 impacts/m)."

Basis of Payment. Replace the second through the fifth paragraphs of Article 406.14 with the following:

"HMA binder and surface courses will be paid for at the contract unit price per ton (metric ton) for MIXTURE FOR CRACKS, JOINTS, AND FLANGEWAYS; HOT-MIX ASPHALT BINDER COURSE (HAND METHOD), of the Ndesign specified; HOT-MIX ASPHALT BINDER COURSE, of the mixture composition and Ndesign specified; HOT-MIX ASPHALT SURFACE COURSE, of the mixture composition, friction aggregate, and Ndesign specified; POLYMERIZED HOT-MIX ASPHALT BINDER COURSE (HAND METHOD), of the Ndesign specified; POLYMERIZED HOT-MIX ASPHALT BINDER COURSE, of the mixture composition and Ndesign specified; POLYMERIZED HOT-MIX ASPHALT SURFACE COURSE, of the mixture composition, friction aggregate, and Ndesign specified; POLYMERIZED HOT-MIX ASPHALT BINDER COURSE, STONE MATRIX ASPHALT, of the mixture composition and Ndesign specified; POLYMERIZED HOT-MIX ASPHALT SURFACE COURSE, STONE MATRIX ASPHALT, of the mixture composition, friction aggregate, and Ndesign specified."

80416

HOT-MIX ASPHALT – LONGITUDINAL JOINT SEALANT (BDE)

Effective: August 1, 2018
Revised: November 1, 2019

Add the following to Article 406.02 of the Standard Specifications.

"(d) Longitudinal Joint Sealant (LJS) .....1032"

Add the following to Article 406.03 of the Standard Specifications.

"(k) Longitudinal Joint Sealant (LJS) Pressure Distributor (Note 2)
(l) Longitudinal Joint Sealant (LJS) Melter Kettle (Note 3)

Note 2. When a pressure distributor is used to apply the LJS, the distributor shall be equipped with a heating and recirculating system along with a functioning auger agitating system or vertical shaft mixer in the hauling tank to prevent localized overheating. The distributor shall be equipped with a guide or laser system to aid in proper placement of the LJS application.

Note 3. When a melter kettle is used to transport and apply the LJS, the melter kettle shall be an oil jacketed double-boiler with agitating and recirculating systems. Material from the kettle may be dispensed through a pressure feed wand with an applicator shoe or through a pressure feed wand into a hand-operated thermal push cart."

Revise Article 406.06(g)(2) of the Standard Specifications to read:

"(2) Longitudinal Joints. Unless prohibited by stage construction, any HMA lift shall be complete before construction of the subsequent lift. The longitudinal joint in all lifts shall be at the centerline of the pavement if the roadway comprises two lanes in width, or at lane width if the roadway is more than two lanes in width.

When stage construction prohibits the total completion of a particular lift, the longitudinal joint in one lift shall be offset from the longitudinal joint in the preceding lift by not less than 3 in. (75 mm). The longitudinal joint in the surface course shall be at the centerline of the pavement if the roadway comprises two lanes in width, or at lane width if the roadway is more than two lanes in width.

A notched wedge longitudinal joint shall be used between successive passes of HMA binder course that has a difference in elevation of greater than 2 in. (50 mm) between lanes on pavement that is open to traffic.

The notched wedge longitudinal joint shall consist of a 1 to 1 1/2 in. (25 to 38 mm) vertical notch at the lane line, a 9 to 12 in. (230 to 300 mm) wide uniform taper sloped toward and extending into the open lane, and a second 1 to 1 1/2 in. (25 to 38 mm) vertical notch at the outside edge.

The notched wedge longitudinal joint shall be formed by the strike off device on the paver. The wedge shall then be compacted by the joint roller.

Tack coat shall be applied to the entire surface of the notched wedge joint immediately prior to placing the adjacent lift of binder. The material shall be uniformly applied at a rate of 0.05 to 0.1 gal/sq yd (0.2 to 0.5 L/sq m).

When the use of longitudinal joint sealant (LJS) is specified, the surface to which the LJS is applied shall be thoroughly cleaned and dry. The LJS may be placed before or after the tack coat. When placed after the tack coat, the tack shall be fully cured prior to placement of the LJS.

The LJS shall be applied in a single pass with a pressure distributor, melter kettle, or hand applied from a roll. At the time of installation, the pavement surface temperature and the ambient temperature shall be a minimum of 40 °F (4 °C) and rising.

The LJS shall be applied at a width of 18 in. (450 mm) ± 1 1/2 in. (38 mm) and centered ± 2 in. (± 50 mm) under the joint of the next HMA lift to be constructed. If the LJS flows more than 2 in. (50 mm) from the initial placement width, LJS placement shall stop and remedial action shall be taken.

When starting another run of LJS placement, suitable release paper shall be placed over the previous application of LJS to prevent doubling up of thickness of LJS.

The application rate of LJS shall be according to the following.

LJS Application Table			
Overlay Thickness in. (mm)	Coarse Graded Application Rate 1/ (IL-19.0, IL-19.0L, IL-9.5, IL-9.5L, IL-4.75) lb/ft (kg/m)	Fine Graded Application Rate 1/ lb/ft (kg/m)	SMA Mixtures 1/ 2/
3/4 (19)	0.88 (1.31)		
1 (25)	1.15 (1.71)		
1 1/4 (32)	1.31 (1.95)	0.88 (1.31)	
1 1/2 (38)	1.47 (2.19)	0.95 (1.42)	1.26 (1.88)
1 3/4 (44)	1.63 (2.43)	1.03 (1.54)	1.38 (2.06)
2 (50)	1.80 (2.68)	1.11 (1.65)	1.51 (2.25)
≥ 2 1/4 (60)	1.96 (2.92)		

1/ The application rate has a surface demand for liquid included within it. The thickness of the LJS may taper from the center of the application to a lesser thickness on the edge of the application, provided the correct width and application rate are maintained.

2/ If the joint is between SMA and either Coarse Graded or Fine Graded, the SMA rate shall be used.

The Contractor shall furnish to the Engineer a bill of lading for each tanker supplying material to the project. The application rate of LJS shall be verified within the first 1000 ft (300 m) of the day's placement and every 12,000 ft (3600 m) thereafter. A suitable paper or pan shall be placed at a random location in the path of the LJS. After application of the LJS, the paper or pan shall be picked up, weighed, and the application rate calculated. The tolerance between the application rate shown in the LJS Application Table and the calculated rate shall be ± 10 percent. The LJS shall be replaced in the area where the sample was taken.

A 1 qt (1 L) sample shall be taken from the pressure distributor or melting kettle at the jobsite once for each contract and sent to the Central Bureau of Materials.

The LJS shall be suitable for construction traffic to drive on without pickup or tracking of the LJS within 30 minutes of placement. If pickup or tracking occurs, LJS placement shall stop and damaged areas shall be repaired.

Prior to paving, the Contractor shall ensure the paver end plate and grade control device is adequately raised above the finished height of the LJS.

The LJS shall not flush to the final surface of the HMA pavement."

Add the following paragraph after the second paragraph of Article 406.13(b) of the Standard Specifications.

"Application of longitudinal joint sealant (LJS) will be measured for payment in place in feet (meters)."

Add the following paragraph after the first paragraph of Article 406.14 of the Standard Specifications.

"Longitudinal joint sealant will be paid for at the contract unit price per foot (meter) for LONGITUDINAL JOINT SEALANT."

Add the following to Section 1032 of the Standard Specifications.

"**1032.12 Longitudinal Joint Sealant (LJS).** Longitudinal joint sealant (LJS) will be accepted according to the current Bureau of Materials and Physical Research Policy Memorandum, "Performance Graded Asphalt Binder Acceptance Procedure" with the following exceptions: Article 3.1.9 and 3.4.1.4 of the policy memorandum will be excluded. The bituminous material used for the LJS shall be according to the following table. Elastomers shall be added to a base asphalt and shall be either a styrene-butadiene diblock or triblock copolymer without oil extension, or a styrene-butadiene rubber. Air blown asphalt, acid modification, or other modifiers will not be allowed. LJS in the form of pre-formed rollout banding may also be used.

Test	Test Requirement	Test Method
Dynamic shear @ 88°C (unaged), G*/sin δ, kPa	1.00 min.	AASHTO T 315
Creep stiffness @ -18°C (unaged), Stiffness (S), MPa m-value	300 max. 0.300 min.	AASHTO T 313
Ash, %	1.0 – 4.0	AASHTO T 111
Elastic Recovery, 100 mm elongation, cut immediately, 25°C, %	70 min.	ASTM D 6084 (Procedure A)
Separation of Polymer, Difference in °C of the softening point (ring and ball)	3 max.	ITP Separation of Polymer from Asphalt Binder"

80398

MANHOLES, VALVE VAULTS, AND FLAT SLAB TOPS (BDE)

Effective: January 1, 2018
Revised: March 1, 2019

Description. In addition to those manufactured according to the current standards included in this contract, manholes, valve vaults, and flat slab tops manufactured prior to March 1, 2019, according to the previous Highway Standards listed below will be accepted on this contract:

Product	Previous Standards		
Precast Manhole Type A, 4' (1.22 m) Diameter	602401-05	602401-04	602401-03
Precast Manhole Type A, 5' (1.52 m) Diameter	602402-01	602402	602401-03
Precast Manhole Type A, 6' (1.83 m) Diameter	602406-09	602406-08	602406-07
Precast Manhole Type A, 7' (2.13 m) Diameter	602411-07	602411-06	602411-05
Precast Manhole Type A, 8' (2.44 m) Diameter	602416-07	602416-06	602416-05
Precast Manhole Type A, 9' (2.74 m) Diameter	602421-07	602421-06	602421-05
Precast Manhole Type A, 10' (3.05 m) Diameter	602426-01	602426	
Precast Valve Vault Type A, 4' (1.22 m) Diameter	602501-04	602501-03	602501-02
Precast Valve Vault Type A, 5' (1.52 m) Diameter	602506-01	602506	602501-02
Precast Reinforced Concrete Flat Slab Top	602601-05	602601-04	

The following revisions to the Standard Specifications shall apply to manholes, valve vaults, and flat slab tops manufactured according to the current standards included in this contract:

Revise Article 602.02(g) of the Standard Specifications to read:

"(g) Structural Steel (Note 4) 1006.04

Note 4. All components of the manhole joint splice shall be galvanized according to the requirements of AASHTO M 111 or M 232 as applicable."

Add the following to Article 602.02 of the Standard Specifications:

"(s) Anchor Bolts and Rods (Note 5) 1006.09

Note 5. The threaded rods for the manhole joint splice shall be according to the requirements of ASTM F 1554, Grade 55, (Grade 380)."

Revise the second paragraph of Article 1042.10 of the Standard Specifications to read:

"Catch basin Types A, B, C, and D; Manhole Type A; Inlet Types A and B; Drainage Structures Types 1, 2, 3, 4, 5, and 6; Valve Vault Type A; and reinforced concrete flat slab top (Highway Standard 602601) shall be manufactured according to AASHTO M 199 (M 199M), except as shown on the plans. Additionally, catch basins, inlets, and drainage structures shall have a minimum concrete compressive strength of 4500 psi (31,000 kPa) at 28 days and manholes,

valve vaults, and reinforced concrete flat slab tops shall have a minimum concrete compressive strength of 5000 psi (34,500 kPa) at 28 days."

80393

MOBILIZATION (BDE)

Effective: April 1, 2020

Replace Articles 671.02(a), (b), and (c) of the Standard Specifications with the following:

"(a) Upon execution of the contract, 90 percent of the pay item will be paid.

(b) When 90 percent of the adjusted contract value is earned, the remaining ten percent of the pay item will be paid along with any amount bid in excess of six percent of the original contract amount."

80428

PORTLAND CEMENT CONCRETE – HAUL TIME (BDE)

Effective: July 1, 2020

Revise Article 1020.11(a)(7) of the Standard Specifications to read:

"(7) Haul Time. Haul time shall begin when the delivery ticket is stamped. The delivery ticket shall be stamped no later than five minutes after the addition of the mixing water to the cement, or after the addition of the cement to the aggregate when the combined aggregates contain free moisture in excess of two percent by weight (mass). If more than one batch is required for charging a truck using a stationary mixer, the time of haul shall start with mixing of the first batch. Haul time shall end when the truck is emptied for incorporation of the concrete into the work. The maximum haul time shall be as follows.

Concrete Temperature at Point of Discharge, °F (°C)	Maximum Haul Time 1/ (minutes)	
	Truck Mixer or Truck Agitator	Nonagitator Truck
50 - 64 (10 - 17.5)	90	45
> 64 (> 17.5) - without retarder	60	30
> 64 (> 17.5) - with retarder	90	45

1/ To encourage start-up testing for mix adjustments at the plant, the first two trucks will be allowed an additional 15 minutes haul time whenever such testing is performed.

For a mixture which is not mixed on the jobsite, a delivery ticket shall be required for each load. The following information shall be recorded on each delivery ticket: (1) ticket number; (2) name of producer and plant location; (3) contract number; (4) name of Contractor; (5) stamped date and time batched; (6) truck number; (7) quantity batched; (8) amount of admixture(s) in the batch; (9) amount of water in the batch; and (10) Department mix design number.

For concrete mixed in jobsite stationary mixers, the above delivery ticket may be waived, but a method of verifying the haul time shall be established to the satisfaction of the Engineer."

80430

RECLAIMED ASPHALT PAVEMENT AND RECLAIMED ASPHALT SHINGLES (BDE)

Effective: November 1, 2012
Revised: January 2, 2021

Revise Section 1031 of the Standard Specifications to read:

"SECTION 1031. RECLAIMED ASPHALT PAVEMENT AND RECLAIMED ASPHALT SHINGLES

1031.01 Description. Reclaimed asphalt pavement and reclaimed asphalt shingles shall be according to the following.

(a) Reclaimed Asphalt Pavement (RAP). RAP is the material produced by cold milling or crushing an existing hot-mix asphalt (HMA) pavement. The Contractor shall supply written documentation that the RAP originated from routes or airfields under federal, state, or local agency jurisdiction.

(b) Reclaimed Asphalt Shingles (RAS). RAS is the material produced from the processing and grinding of preconsumer or post-consumer shingles. RAS shall be a clean and uniform material with a maximum of 0.5 percent unacceptable material by weight of RAS, as defined in the Bureau of Materials Policy Memorandum, "Reclaimed Asphalt Shingle (RAS) Sources". RAS shall come from a facility source on the Department's "Qualified Producer List of Certified Sources for Reclaimed Asphalt Shingles" where it shall be ground and processed to 100 percent passing the 3/8 in. (9.5 mm) sieve and 93 percent passing the #4 (4.75 mm) sieve based on a dry shake gradation. RAS shall be uniform in gradation and asphalt binder content and shall meet the testing requirements specified herein. In addition, RAS shall meet the following Type 1 or Type 2 requirements.

(1) Type 1. Type 1 RAS shall be processed, preconsumer asphalt shingles salvaged from the manufacture of residential asphalt roofing shingles.

(2) Type 2. Type 2 RAS shall be processed post-consumer shingles only, salvaged from residential, or four unit or less dwellings not subject to the National Emission Standards for Hazardous Air Pollutants (NESHAP).

1031.02 Stockpiles. RAP and RAS stockpiles shall be according to the following.

(a) RAP Stockpiles. The Contractor shall construct individual RAP stockpiles meeting one of the following definitions. Stockpiles shall be sufficiently separated to prevent intermingling at the base. Stockpiles shall be identified by signs indicating the type as listed below (i.e. "Homogeneous Surface").

Prior to milling, the Contractor shall request the Department provide documentation on the quality of the RAP to clarify the appropriate stockpile.

(1) Fractionated RAP (FRAP). FRAP shall consist of RAP from Class I, HMA (High and Low ESAL) mixtures. The coarse aggregate in FRAP shall be crushed aggregate and may represent more than one aggregate type and/or quality but shall be at least C quality. FRAP shall be fractionated prior to testing by screening into a minimum of two size fractions with the separation occurring on or between the No. 4 (4.75 mm) and 1/2 in. (12.5 mm) sieves. Agglomerations shall be minimized such that 100 percent of the RAP in the coarse fraction shall pass the maximum sieve size specified for the mixture composition of the mix design.

(2) Homogeneous. Homogeneous RAP stockpiles shall consist of RAP from Class I, HMA (High and Low ESAL) mixtures and represent: 1) the same aggregate quality, but shall be at least C quality; 2) the same type of crushed aggregate (either crushed natural aggregate, ACBF slag, or steel slag); 3) similar gradation; and 4) similar asphalt binder content. If approved by the Engineer, combined single pass surface/binder millings may be considered "homogeneous" with a quality rating dictated by the lowest coarse aggregate quality present in the mixture.

(3) Conglomerate. Conglomerate RAP stockpiles shall consist of RAP from Class I, HMA (High and Low ESAL) mixtures. The coarse aggregate in this RAP shall be crushed aggregate and may represent more than one aggregate type and/or quality but shall be at least C quality. This RAP may have an inconsistent gradation and/or asphalt binder content prior to processing. Conglomerate RAP shall be processed prior to testing by crushing to where all RAP shall pass the 5/8 in. (16 mm) or smaller screen. Conglomerate RAP stockpiles shall not contain steel slag.

(4) Conglomerate "D" Quality (Conglomerate DQ). Conglomerate DQ RAP stockpiles shall be according to Articles 1031.02(a)(1)-1031.02(a)(3), except they may also consist of RAP from HMA shoulders, bituminous stabilized subbases, or HMA (High or Low ESAL) binder mixture. The coarse aggregate in this RAP may be crushed or round but shall be at least D quality. This RAP may have an inconsistent gradation and/or asphalt binder content.

(5) Non-Quality. RAP stockpiles that do not meet the requirements of the stockpile categories listed above shall be classified as "Non-Quality".

RAP/FRAP containing contaminants, such as earth, brick, sand, concrete, sheet asphalt, non-bituminous surface treatment (i.e. high friction surface treatments), pavement fabric, joint sealants, plant cleanout, etc., will be unacceptable unless the contaminants are removed to the satisfaction of the Engineer. Sheet asphalt shall be stockpiled separately.

(b) RAS Stockpiles. Type 1 and Type 2 RAS shall be stockpiled separately and shall not be intermingled. Each stockpile shall be signed indicating what type of RAS is present.

Unless otherwise specified by the Engineer, mechanically blending manufactured sand (FM 20 or FM 22) or fine FRAP up to an equal weight of RAS with the processed RAS will be permitted to improve workability. The sand shall be B quality or better from an

approved Aggregate Gradation Control System source. The sand shall be accounted for in the mix design and during HMA production.

Records identifying the shingle processing facility supplying the RAS, RAS type, and lot number shall be maintained by project contract number and kept for a minimum of three years.

Additional processed RAP/FRAP/RAS shall be stockpiled in a separate working pile, as designated in the QC Plan, and only added to the original stockpile after the test results for the working pile are found to meet the requirements specified in Articles 1031.03 and 1031.04.

1031.03 Testing. RAP/FRAP and RAS testing shall be according to the following.

(a) RAP/FRAP Testing. When used in HMA, the RAP/FRAP shall be sampled and tested either during or after stockpiling.

(1) During Stockpiling. For testing during stockpiling, washed extraction samples shall be run at the minimum frequency of one sample per 500 tons (450 metric tons) for the first 2,000 tons (1,800 metric tons) and one sample per 2,000 tons (1,800 metric tons) thereafter. A minimum of five tests shall be required for stockpiles less than 4,000 tons (3,600 metric tons).

(2) After Stockpiling. For testing after stockpiling, the Contractor shall submit a plan for approval to the Department proposing a satisfactory method of sampling and testing the RAP/FRAP pile either in-situ or by restockpiling. The sampling plan shall meet the minimum frequency required above and detail the procedure used to obtain representative samples throughout the pile for testing.

Each sample shall be split to obtain two equal samples of test sample size. One of the two test samples from the final split shall be labeled and stored for Department use. The Contractor shall perform a washed extraction on the other test sample according to Illinois Modified AASHTO T 164. The Engineer reserves the right to test any sample (split or Department-taken) to verify Contractor test results.

(b) RAS Testing. RAS or RAS blended with manufactured sand shall be sampled and tested during stockpiling according to the Bureau of Materials Policy Memorandum, "Reclaimed Asphalt Shingle (RAS) Source".

Samples shall be collected during stockpiling at the minimum frequency of one sample per 200 tons (180 metric tons) for the first 1,000 tons (900 metric tons) and one sample per 500 tons (450 metric tons) or a minimum of once per week, whichever is more frequent, thereafter. A minimum of five samples are required for stockpiles less than 1,000 tons (900 metric tons).

Before testing, each sample shall be split to obtain two test samples. One of the two test samples from the final split shall be labeled and stored for Department use. The

Contractor shall perform a washed extraction and test for unacceptable materials on the other test sample according to Illinois Modified AASHTO T 164. The Engineer reserves the right to test any sample (split or Department-taken) to verify Contractor test results.

The Contractor shall obtain and make available all of the test results from the start of the original stockpile.

1031.04 Evaluation of Tests. Evaluation of test results shall be according to the following.

(a) Limits of Precision. The limits of precision between the Contractor's and the Department's split sample test results shall be according to the following.

Test Parameter	Limits of Precision		
% Passing	RAP	FRAP	RAS
1/2 in. (12.5 mm)	6.0 %	5.0 %	
# 4 (4.75 mm)	6.0 %	5.0 %	
# 8 (2.36 mm)	4.0 %	3.0 %	4.0 %
# 30 (600 µm)	3.0 %	2.0 %	4.0 %
# 200 (75 µm)	2.5 %	2.2 %	4.0 %
Asphalt Binder	0.4 %	0.3 %	3.0 %
G_{mm}	0.035	0.030	

If the test results are outside the above limits of precision, the Department will immediately investigate.

(b) Evaluation of RAP/FRAP Test Results. All of the extraction results shall be compiled and averaged for asphalt binder content and gradation, and when applicable G_{mm}. Individual extraction test results, when compared to the averages, will be accepted if within the tolerances listed below.

Parameter	FRAP/Homogeneous/ Conglomerate
1 in. (25 mm)	
1/2 in. (12.5 mm)	± 8 %
# 4 (4.75 mm)	± 6 %
# 8 (2.36 mm)	± 5 %
# 16 (1.18 mm)	
# 30 (600 µm)	± 5 %
# 200 (75 µm)	± 2.0 %
Asphalt Binder	± 0.4 % 1/
G_{mm}	± 0.03 2/

1/ The tolerance for FRAP shall be ± 0.3 percent.

2/ For stockpile with slag or steel slag present as determined in the current Manual of Test Procedures Appendix B 21, "Determination of Aggregate Bulk (Dry) Specific Gravity (Gsb) of Reclaimed Asphalt Pavement (RAP) and Reclaimed Asphalt Shingles (RAS)".

If more than 20 percent of the test results for an individual parameter (individual sieves, G_{mm}, and/or asphalt binder content) are out of the above tolerances, the RAP/FRAP shall not be used in HMA unless the RAP/FRAP representing the failing tests is removed from the stockpile. All test data and acceptance ranges shall be sent to the Department for evaluation.

With the approval of the Engineer, the ignition oven may be substituted for solvent extractions according to the document "Calibration of the Ignition Oven for the Purpose of Characterizing Reclaimed Asphalt Pavement (RAP)".

(c) Evaluation of RAS and RAS Blended with Manufactured Sand or Fine FRAP Test Results. All of the test results, with the exception of percent unacceptable materials, shall be compiled and averaged for asphalt binder content and gradation. Individual test results, when compared to the averages, will be accepted if within the tolerances listed below.

Parameter	RAS
# 8 (2.36 mm)	± 5 %
# 16 (1.18 mm)	± 5 %
# 30 (600 µm)	± 4 %
# 200 (75 µm)	± 2.5 %
Asphalt Binder Content	± 2.0 %

If more than 20 percent of the test results for an individual parameter (individual sieves and/or asphalt binder content) are out of the above tolerances, or if the unacceptable material exceeds 0.5 percent by weight of material retained on the No. 4 (4.75 mm) sieve, the RAS or RAS blend shall not be used in Department projects. All test data and acceptance ranges shall be sent to the Department for evaluation.

1031.05 Quality Designation of Aggregate in RAP/FRAP.

(a) RAP. The aggregate quality of the RAP for homogeneous, conglomerate, and conglomerate DQ stockpiles shall be set by the lowest quality of coarse aggregate in the RAP stockpile and are designated as follows.

(1) RAP from Class I, HMA (High ESAL), or (Low ESAL) IL-9.5L surface mixtures are designated as containing Class B quality coarse aggregate.

(2) RAP from Class I binder, HMA (High ESAL) binder, or (Low ESAL) IL-19.0L binder mixtures are designated as containing Class C quality coarse aggregate.

(3) RAP from BAM stabilized subbase and BAM shoulders are designated as containing Class D quality coarse aggregate.

(b) FRAP. If the Engineer has documentation of the quality of the FRAP aggregate, the Contractor shall use the assigned quality provided by the Engineer.

If the quality is not known, the quality shall be determined as follows. Coarse and fine FRAP stockpiles containing plus No. 4 (4.75 mm) sieve coarse aggregate shall have a maximum tonnage of 5,000 tons (4,500 metric tons). The Contractor shall obtain a representative sample witnessed by the Engineer. The sample shall be a minimum of 50 lb (25 kg). The sample shall be extracted according to Illinois Modified AASHTO T 164 by a consultant laboratory prequalified by the Department for the specified testing. The consultant laboratory shall submit the test results along with the recovered aggregate sample to the District Office. Consultant laboratory services will be at no additional cost to the Department. The District will forward the sample to the Central Bureau of Materials Aggregate Lab for MicroDeval Testing, according to ITP 327. A maximum loss of 15.0 percent will be applied for all HMA applications.

1031.06 Use of RAP/FRAP and/or RAS in HMA. The use of RAP/FRAP and/or RAS shall be the Contractor's option when constructing HMA in all contracts.

(a) RAP/FRAP. The use of RAP/FRAP in HMA shall be as follows.

(1) Coarse Aggregate Size. The coarse aggregate in all RAP shall be equal to or less than the nominal maximum size requirement for the HMA mixture to be produced.

(2) Steel Slag Stockpiles. Homogeneous RAP stockpiles containing steel slag will be approved for use in all HMA (High ESAL and Low ESAL) surface and binder mixture applications.

(3) Use in HMA Surface Mixtures (High and Low ESAL). RAP/FRAP stockpiles for use in HMA surface mixtures (High and Low ESAL) shall be FRAP or homogeneous in which the coarse aggregate is Class B quality or better. FRAP from conglomerate stockpiles shall be considered equivalent to limestone for frictional considerations. Known frictional contributions from plus No. 4 (4.75 mm) homogeneous FRAP stockpiles will be accounted for in meeting frictional requirements in the specified mixture.

(4) Use in HMA Binder Mixtures (High and Low ESAL), HMA Base Course, and HMA Base Course Widening. RAP/FRAP stockpiles for use in HMA binder mixtures (High and Low ESAL), HMA base course, and HMA base course widening shall be FRAP, homogeneous, or conglomerate, in which the coarse aggregate is Class C quality or better.

(5) Use in Shoulders and Subbase. RAP/FRAP stockpiles for use in HMA shoulders and stabilized subbase (HMA) shall be FRAP, homogeneous, or conglomerate.

(6) When the Contractor chooses the RAP option, the percentage of RAP shall not exceed the amounts indicated in Article 1031.06(c)(1) below for a given Ndesign.

(b) RAS. RAS meeting Type 1 or Type 2 requirements will be permitted in all HMA applications as specified herein.

(c) RAP/FRAP and/or RAS Usage Limits. Type 1 or Type 2 RAS may be used alone or in conjunction with RAP or FRAP in HMA mixtures up to a maximum of 5.0 percent by weight of the total mix.

(1) RAP/RAS. When RAP is used alone or RAP is used in conjunction with RAS, the percentage of virgin asphalt binder replacement (ABR) shall not exceed the amounts listed in the following table.

HMA Mixtures - RAP/RAS Maximum ABR % 1/ 2/			
Ndesign	Binder	Surface	Polymer Modified Binder or Surface
30	30	30	10
50	25	15	10
70	15	10	10
90	10	10	10

1/ For Low ESAL HMA shoulder and stabilized subbase, the RAP/RAS ABR shall not exceed 50 percent of the mixture.

2/ When RAP/RAS ABR exceeds 20 percent, the high and low virgin asphalt binder grades shall each be reduced by one grade (i.e. 25 percent ABR would require a virgin asphalt binder grade of PG 64-22 to be reduced to a PG 58-28).

(2) FRAP/RAS. When FRAP is used alone or FRAP is used in conjunction with RAS, the percentage of virgin asphalt binder replacement shall not exceed the amounts listed in the following table.

HMA Mixtures - FRAP/RAS Maximum ABR % 1/ 2/			
Ndesign	Binder	Surface	Polymer Modified Binder or Surface
30	55	45	15
50	45	40	15
70	45	35	15
90	45	35	15
SMA	- -	- -	25

IL-4.75	- -	- -	35

1/ For Low ESAL HMA shoulder and stabilized subbase, the FRAP/RAS ABR shall not exceed 50 percent of the mixture.

2/ When FRAP/RAS ABR exceeds 20 percent for all mixes, the high and low virgin asphalt binder grades shall each be reduced by one grade (i.e. 25 percent ABR would require a virgin asphalt binder grade of PG 64-22 to be reduced to a PG 58-28).

1031.07 HMA Mix Designs. At the Contractor's option, HMA mixtures may be constructed utilizing RAP/FRAP and/or RAS material meeting the detailed requirements specified herein.

(a) RAP/FRAP and/or RAS. RAP/FRAP and/or RAS mix designs shall be submitted for verification. If additional RAP/FRAP and/or RAS stockpiles are tested and found that no more than 20 percent of the individual parameter test results, as defined in Article 1031.04, are outside of the control tolerances set for the original RAP/FRAP and/or RAS stockpile and HMA mix design, and meets all of the requirements herein, the additional RAP/FRAP and/or RAS stockpiles may be used in the original mix design at the percent previously verified.

(b) RAS. Type 1 and Type 2 RAS are not interchangeable in a mix design.

The RAP, FRAP, and RAS stone bulk specific gravities (G_{sb}) shall be according to the "Determination of Aggregate Bulk (Dry) Specific Gravity (G_{sb}) of Reclaimed Asphalt Pavement (RAP) and Reclaimed Asphalt Shingles (RAS)" procedure in the Department's Manual of Test Procedures for Materials.

1031.08 HMA Production. HMA production utilizing RAP/FRAP and/or RAS shall be as follows.

To remove or reduce agglomerated material, a scalping screen, gator, crushing unit, or comparable sizing device approved by the Engineer shall be used in the RAP/FRAP and/or RAS feed system to remove or reduce oversized material.

If the RAP/FRAP and/or RAS control tolerances or QC/QA test results require corrective action, the Contractor shall cease production of the mixture containing RAP/FRAP and/or RAS and either switch to the virgin aggregate design or submit a new mix design.

(a) RAP/FRAP. The coarse aggregate in all RAP/FRAP used shall be equal to or less than the nominal maximum size requirement for the HMA mixture being produced.

(b) RAS. RAS shall be incorporated into the HMA mixture either by a separate weight depletion system or by using the RAP weigh belt. Either feed system shall be interlocked with the aggregate feed or weigh system to maintain correct proportions for all rates of production and batch sizes. The portion of RAS shall be controlled accurately to within

± 0.5 percent of the amount of RAS utilized. When using the weight depletion system, flow indicators or sensing devices shall be provided and interlocked with the plant controls such that the mixture production is halted when RAS flow is interrupted.

(c) RAP/FRAP and/or RAS. HMA plants utilizing RAP/FRAP and/or RAS shall be capable of automatically recording and printing the following information.

(1) Dryer Drum Plants.

a. Date, month, year, and time to the nearest minute for each print.

b. HMA mix number assigned by the Department.

c. Accumulated weight of dry aggregate (combined or individual) in tons (metric tons) to the nearest 0.1 ton (0.1 metric ton).

d. Accumulated dry weight of RAP/FRAP/RAS in tons (metric tons) to the nearest 0.1 ton (0.1 metric ton).

e. Accumulated mineral filler in revolutions, tons (metric tons), etc. to the nearest 0.1 unit.

f. Accumulated asphalt binder in gallons (liters), tons (metric tons), etc. to the nearest 0.1 unit.

g. Residual asphalt binder in the RAP/FRAP/RAS material as a percent of the total mix to the nearest 0.1 percent.

h. Aggregate and RAP/FRAP/RAS moisture compensators in percent as set on the control panel. (Required when accumulated or individual aggregate and RAP/FRAP/RAS are recorded in a wet condition.)

i. A positive dust control system shall be utilized when the combined contribution of reclaimed material passing the No. 200 sieve exceeds 1.5 percent.

(2) Batch Plants.

a. Date, month, year, and time to the nearest minute for each print.

b. HMA mix number assigned by the Department.

c. Individual virgin aggregate hot bin batch weights to the nearest pound (kilogram).

d. Mineral filler weight to the nearest pound (kilogram).

e. RAP/FRAP/RAS weight to the nearest pound (kilogram).

f. Virgin asphalt binder weight to the nearest pound (kilogram).

g. Residual asphalt binder in the RAP/FRAP/RAS material as a percent of the total mix to the nearest 0.1 percent.

The printouts shall be maintained in a file at the plant for a minimum of one year or as directed by the Engineer and shall be made available upon request. The printing system will be inspected by the Engineer prior to production and verified at the beginning of each construction season thereafter.

1031.09 RAP in Aggregate Applications. RAP in aggregate applications shall be according to the Bureau of Materials Policy Memorandum, "Reclaimed Asphalt Pavement (RAP) for Aggregate Applications" and the following.

(a) RAP in Aggregate Surface Course and Aggregate Wedge Shoulders, Type B. The use of RAP in aggregate surface course (temporary access entrances only) and aggregate wedge shoulders, Type B shall be as follows.

(1) Stockpiles and Testing. RAP stockpiles may be any of those listed in Article 1031.02, except "Non-Quality" and "FRAP". The testing requirements of Article 1031.03 shall not apply.

(2) Gradation. One hundred percent of the RAP material shall pass the 1 1/2 in. (37.5 mm) sieve. The RAP material shall be reasonably well graded from coarse to fine. RAP material that is gap-graded or single sized will not be accepted.

(b) RAP in Aggregate Subgrade Improvement (ASI). RAP in ASI shall be according to Article 1031.06, except "Conglomerate DQ" and "Non-Quality" may be used."

80306

REMOVAL AND DISPOSAL OF REGULATED SUBSTANCES (BDE)

Effective: January 1, 2019
Revised: January 1, 2020

Revise Section 669 of the Standard Specifications to read:

"SECTION 669. REMOVAL AND DISPOSAL OF REGULATED SUBSTANCES

669.01 Description. This work shall consist of the transportation and proper disposal of regulated substances. This work shall also consist of the removal, transportation, and proper disposal of underground storage tanks (UST), their contents and associated underground piping to the point where the piping is above the ground, including determining the content types and estimated quantities.

669.02 Equipment. The Contractor shall notify the Engineer of the delivery of all excavation, storage, and transportation equipment to a work area location. The equipment shall comply with OSHA and American Petroleum Institute (API) guidelines and shall be furnished in a clean condition. Clean condition means the equipment does not contain any residual material classified as a non-special waste, non-hazardous special waste, or hazardous waste. Residual materials include, but are not limited to, petroleum products, chemical products, sludges, or any other material present in or on equipment.

Before beginning any associated soil or groundwater management activity, the Contractor shall provide the Engineer with the opportunity to visually inspect and approve the equipment. If the equipment contains any contaminated residual material, decontamination shall be performed on the equipment as appropriate to the regulated substance and degree of contamination present according to OSHA and API guidelines. All cleaning fluids used shall be treated as the contaminant unless laboratory testing proves otherwise.

669.03 Pre-Construction Submittals and Qualifications. Prior to beginning this work, or working in areas with regulated substances, the Contractor shall submit a "Regulated Substances Pre-Construction Plan (RSPCP)" to the Engineer for review and approval using form BDE 2730. The form shall be signed by an Illinois licensed Professional Engineer or Professional Geologist.

As part of the RSPCP, the Contractor(s) or firm(s) performing the work shall meet the following qualifications.

(a) Regulated Substances Monitoring. Qualification for environmental observation and field screening of regulated substances work and environmental observation of UST removal shall require either pre-qualification in Hazardous Waste by the Department or demonstration of acceptable project experience in remediation and operations for contaminated sites in accordance with applicable Federal, State, or local regulatory requirements using BDE 2730.

Qualification for each individual performing regulated substances monitoring shall require a minimum of one-year of experience in similar activities as those required for the project.

(b) Underground Storage Tank Removal. Qualification for underground storage tank (UST) removal work shall require licensing and certification with the Office of the State Fire Marshall (OSFM) and possession of all permits required to perform the work. A copy of the permit shall be provided to the Engineer prior to tank removal.

The qualified Contractor(s) or firm(s) shall also document it does not have any current or former ties with any of the properties contained within, adjoining, or potentially affecting the work.

The Engineer will require up to 21 calendar days for review of the RSPCP. The review may involve rejection or revision and resubmittal; in which case, an additional 21 days will be required for each subsequent review. Work shall not commence until the RSPCP has been approved by the Engineer. After approval, the RSPCP shall be revised as necessary to reflect changed conditions in the field and documented using BDE 2730A "Regulated Substances Pre-Construction Plan (RSPCP) Addendum" and submitted to the Engineer for approval.

CONSTRUCTION REQUIREMENTS

669.04 Regulated Substances Monitoring. Regulated substances monitoring includes environmental observation and field screening during regulated substances management activities at the contract specific work areas. As part of the regulated substances monitoring, the monitoring personnel shall perform and document the applicable duties listed on form BDE 2732 "Regulated Substances Monitoring Daily Record (RSMDR)".

(a) Environmental Observation. Prior to beginning excavation, the Contractor shall mark the limits of the contract specific work areas. Once work begins, the monitoring personnel shall be present on-site continuously during the excavation and loading of material.

(b) Field Screening. Field screening shall be performed during the excavation and loading of material from the contract specific work areas, except for material classified according to Article 669.05(b)(1) or 669.05(c) where field screening is not required.

Field screening shall be performed with either a photoionization detector (PID) (minimum 10.6eV lamp) or a flame ionization detector (FID), and other equipment as appropriate, to monitor for potential contaminants associated with regulated substances. The PID or FID shall be calibrated on-site, and background level readings taken and recorded daily, and as field and weather conditions change. Field screen readings on the PID or FID in excess of background levels indicates the potential presence of regulated substances requiring handling as a non-special waste, special waste, or hazardous waste. PID or FID readings may be used as the basis of increasing the limits of removal with the approval of the Engineer but shall in no case be used to decrease the limits.

669.05 Regulated Substances Management and Disposal. The management and disposal of soil and/or groundwater containing regulated substances shall be according to the following:

(a) Soil Analytical Results Exceed Most Stringent MAC. When the soil analytical results indicate detected levels exceed the most stringent maximum allowable concentration (MAC) for chemical constituents in soil established pursuant to Subpart F of 35 Ill. Adm. Code 1100.605, the soil shall be managed as follows:

(1) When analytical results indicate inorganic chemical constituents exceed the most stringent MAC, but still considered within area background levels by the Engineer, the excavated soil can be utilized within the right-of-way as embankment or fill, when suitable. If the soils cannot be utilized within the right-of-way, they shall be managed and disposed of at a landfill as a non-special waste.

(2) When analytical results indicate inorganic chemical constituents exceed the most stringent MAC but do not exceed the MAC for a Metropolitan Statistical Area (MSA) County identified in 35 Ill. Admin. Code 742 Appendix A. Table G, the excavated soil can be utilized within the right-of-way as embankment or fill, when suitable, or managed and disposed of at a clean construction and demolition debris (CCDD) facility or an uncontaminated soil fill operation (USFO) within an MSA County provided the pH of the soil is within the range of 6.25 - 9.0, inclusive.

(3) When analytical results indicate chemical constituents exceed the most stringent MAC but do not exceed the MAC for an MSA County excluding Chicago, or the MAC within the Chicago corporate limits, the excavated soil can be utilized within the right-of-way as embankment or fill, when suitable, or managed and disposed of off-site at a CCDD facility or an USFO within an MSA County excluding Chicago or within the Chicago corporate limits provided the pH of the soil is within the range of 6.25 - 9.0, inclusive.

(4) When analytical results indicate chemical constituents exceed the most stringent MAC but do not exceed the MAC for an MSA County excluding Chicago, the excavated soil can be utilized within the right-of-way as embankment or fill, when suitable, or managed and disposed of off-site at a CCDD facility or an USFO within an MSA County excluding Chicago provided the pH of the soil is within the range of 6.25 - 9.0, inclusive.

(5) When the Engineer determines soil cannot be managed according to Articles 669.05(a)(1) through (a)(4) above and the materials do not contain special waste or hazardous waste, as determined by the Engineer, the soil shall be managed and disposed of at a landfill as a non-special waste.

(6) When analytical results indicate soil is hazardous by characteristic or listing pursuant to 35 Ill. Admin. Code 721, contains radiological constituents, or the Engineer otherwise determines the soil cannot be managed according to Articles 669.05(a)(1)

through (a)(5) above, the soil shall be managed and disposed of off-site as a special waste or hazardous waste as applicable.

(b) Soil Analytical Results Do Not Exceed Most Stringent MAC. When the soil analytical results indicate that detected levels do not exceed the most stringent MAC, the excavated soil can be utilized within the right-of-way as embankment or fill, when suitable, or managed and disposed of off-site according to Article 202.03. However, the excavated soil cannot be taken to a CCDD facility or an USFO for any of the following reasons.

(1) The pH of the soil is less than 6.25 or greater than 9.0.

(2) The soil exhibited PID or FID readings in excess of background levels.

(c) Soil Analytical Results Exceed Most Stringent MAC but Do Not Exceed Tiered Approach to Corrective Action Objectives (TACO) Residential. When the soil analytical results indicate that detected levels exceed the most stringent MAC but do not exceed TACO Tier 1 Soil Remediation Objectives for Residential Properties pursuant to 35 Ill. Admin. Code 742 Appendix B Table A, the excavated soil can be utilized within the right-of-way as embankment or fill, when suitable, or managed and disposed of off-site according to Article 202.03. However, the excavated soil cannot be taken to a CCDD facility or an USFO.

(d) Groundwater. When groundwater analytical results indicate the detected levels are above Appendix B, Table E of 35 Ill. Admin. Code 742, the most stringent Tier 1 Groundwater Remediation Objectives for Groundwater Component of the Groundwater Ingestion Route for Class 1 groundwater, the groundwater shall be managed off-site as a special waste or hazardous waste as applicable. Special waste groundwater shall be containerized and trucked to an off-site treatment facility, or may be discharged to a sanitary sewer or combined sewer when permitted by the local sewer authority. Groundwater discharged to a sanitary sewer or combined sewer shall be pre-treated to remove particulates and measured with a calibrated flow meter to comply with applicable discharge limits. A copy of the permit shall be provided to the Engineer prior to discharging groundwater to the sanitary sewer or combined sewer.

Groundwater encountered within trenches may be managed within the trench and allowed to infiltrate back into the ground. If the groundwater cannot be managed within the trench, it may be discharged to a sanitary sewer or combined sewer when permitted by the local sewer authority, or it shall be containerized and trucked to an off-site treatment facility as a special waste or hazardous waste. The Contractor is prohibited from discharging groundwater within the trench through a storm sewer. The Contractor shall install backfill plugs within the area of groundwater contamination.

One backfill plug shall be placed down gradient to the area of groundwater contamination. Backfill plugs shall be installed at intervals not to exceed 50 ft (15 m). Backfill plugs are to be 4 ft (1.2 m) long, measured parallel to the trench, full trench width and depth. Backfill plugs shall not have any fine aggregate bedding or backfill, but shall be entirely cohesive

soil or any class of concrete. The Contractor shall provide test data that the material has a permeability of less than 10^{-7} cm/sec according to ASTM D 5084, Method A or per another test method approved by the Engineer.

The Contractor shall use due care when transferring contaminated material from the area of origin to the transporter. Should releases of contaminated material to the environment occur (i.e., spillage onto the ground, etc.), the Contractor shall clean-up spilled material and place in the appropriate storage containers as previously specified. Clean-up shall include, but not be limited to, sampling beneath the material staging area to determine complete removal of the spilled material.

The Contractor shall provide engineered barriers, when required, and shall include materials sufficient to completely line excavation surfaces, including sloped surfaces, bottoms, and sidewall faces, within the areas designated for protection.

The Contractor shall obtain all documentation including any permits and/or licenses required to transport the material containing regulated substances to the disposal facility. The Contractor shall coordinate with the Engineer on the completion of all documentation. The Contractor shall make all arrangements for collection and analysis of landfill acceptance testing. The Contractor shall coordinate waste disposal approvals with the disposal facility.

The Contractor shall provide the Engineer with all transport-related documentation within two days of transport or receipt of said document(s). For management of special or hazardous waste, the Contractor shall provide the Engineer with documentation that the Contractor is operating with a valid Illinois special waste transporter permit at least two weeks before transporting the first load of contaminated material.

Transportation and disposal of material classified according to Article 669.05(a)(5) or 669.05(a)(6) shall be completed each day so that none of the material remains on-site by the close of business, except when temporary staging has been approved.

Any waste generated as a special or hazardous waste from a non-fixed facility shall be manifested off-site using the Department's county generator number provided by the Bureau of Design and Environment. An authorized representative of the Department shall sign all manifests for the disposal of the contaminated material and confirm the Contractor's transported volume. Any waste generated as a non-special waste may be managed off-site without a manifest, a special waste transporter, or a generator number.

The Contractor shall select a landfill permitted for disposal of the contaminant within the State of Illinois. The Department will review and approve or reject the facility proposed by the Contractor to use as a landfill. The Contractor shall verify whether the selected disposal facility is compliant with those applicable standards as mandated by their permit and whether the disposal facility is presently, has previously been, or has never been, on the United States Environmental Protection Agency (U.S. EPA) National Priorities List or the Resource Conservation and Recovery Act (RCRA) List of Violating Facilities. The use of a Contractor selected landfill shall in no manner delay the construction schedule or alter the Contractor's responsibilities as set forth.

669.06 Non-Special Waste Certification. An authorized representative of the Department shall sign and date all non-special waste certifications. The Contractor shall be responsible for providing the Engineer with the required information that will allow the Engineer to certify the waste is not a special waste.

(a) Definition. A waste is considered a non-special waste as long as it is not:

(1) a potentially infectious medical waste;

(2) a hazardous waste as defined in 35 Ill. Admin. Code 721;

(3) an industrial process waste or pollution control waste that contains liquids, as determined using the paint filter test set forth in subdivision (3)(A) of subsection (m) of 35 Ill. Admin. Code 811.107;

(4) a regulated asbestos-containing waste material, as defined under the National Emission Standards for Hazardous Air Pollutants in 40 CFR Part 61.141;

(5) a material containing polychlorinated biphenyls (PCB's) regulated pursuant to 40 CFR Part 761;

(6) a material subject to the waste analysis and recordkeeping requirements of 35 Ill. Admin. Code 728.107 under land disposal restrictions of 35 Ill. Admin. Code 728;

(7) a waste material generated by processing recyclable metals by shredding and required to be managed as a special waste under Section 22.29 of the Environmental Protection Act; or

(8) an empty portable device or container in which a special or hazardous waste has been stored, transported, treated, disposed of, or otherwise handled.

(b) Certification Information. All information used to determine the waste is not a special waste shall be attached to the certification. The information shall include but not be limited to:

(1) the means by which the generator has determined the waste is not a hazardous waste;

(2) the means by which the generator has determined the waste is not a liquid;

(3) if the waste undergoes testing, the analytic results obtained from testing, signed and dated by the person responsible for completing the analysis;

(4) if the waste does not undergo testing, an explanation as to why no testing is needed;

(5) a description of the process generating the waste; and

(6) relevant material safety data sheets.

669.07 Temporary Staging. Soil classified according to Articles 669.05(a)(2), (b)(1), or (c) may be temporarily staged at the Contractor's option. Soil classified according to Articles 669.05(a)(1), (a)(3), (a)(4), (a)(5), (a)(6), or (b)(2) shall be managed and disposed of without temporary staging to the greatest extent practicable. If circumstances beyond the Contractor's control require temporary staging of these latter materials, the Contractor shall request approval from the Engineer in writing.

Temporary staging shall be accomplished within the right-of-way and the Contractor's means and methods shall be described in the approved or amended RSPCP. Staging areas shall not be located within 200 feet (61 m) of a public or private water supply well; nor within 100 feet (30 m) of sensitive environmental receptor areas, including wetlands, rivers, streams, lakes, or designated habitat zones.

The method of staging shall consist of containerization or stockpiling as applicable for the type, classification, and physical state (i.e., liquid, solid, semisolid) of the material. Materials of different classifications shall be staged separately with no mixing or co-mingling.

When containers are used, the containers and their contents shall remain intact and inaccessible to unauthorized persons until the manner of disposal is determined. The Contractor shall be responsible for all activities associated with the storage containers including, but not limited to, the procurement, transport, and labeling of the containers. The Contractor shall not use a storage container if visual inspection of the container reveals the presence of free liquids or other substances that could cause the waste to be reclassified as a hazardous or special waste.

When stockpiles are used, they shall be covered with a minimum 20-mil plastic sheeting or tarps secured using weights or tie-downs. Perimeter berms or diversionary trenches shall be provided to contain and collect for disposal any water that drains from the soil. Stockpiles shall be managed to prevent or reduce potential dust generation.

When staging non-special waste, special waste, or hazardous waste, the following additional requirements shall apply:

(a) Non-Special Waste. When stockpiling soil classified according to Article 669.05(a)(1) or 669.05(a)(5), an impermeable surface barrier between the materials and the ground surface shall be installed. The impermeable barrier shall consist of a minimum 20-mil plastic liner material and the surface of the stockpile area shall be clean and free of debris prior to placement of the liner. Measures shall also be taken to limit or discourage access to the staging area.

(b) Special Waste and Hazardous Waste. Soil classified according to Article 669.05(a)(6) shall not be stockpiled but shall be containerized immediately upon generation in containers, tanks or containment buildings as defined by RCRA, Toxic Substances Control

Act (TSCA), and other applicable State or local regulations and requirements, including 35 Ill. Admin. Code Part 722, Standards Applicable to Generators of Hazardous Waste.

The staging area(s) shall be enclosed (by a fence or other structure) to restrict direct access to the area, and all required regulatory identification signs applicable to a staging area containing special waste or hazardous waste shall be deployed.

Storage containers shall be placed on an all-weather gravel-packed, asphalt, or concrete surface. Containers shall be in good condition and free of leaks, large dents, or severe rusting, which may compromise containment integrity. Containers must be constructed of, or lined with, materials that will not react or be otherwise incompatible with the hazardous or special waste contents. Containers used to store liquids shall not be filled more than 80 percent of the rated capacity. Incompatible wastes shall not be placed in the same container or comingled.

All containers shall be legibly labeled and marked using pre-printed labels and permanent marker in accordance with applicable regulations, clearly showing the date of waste generation, location and/or area of waste generation, and type of waste. The Contractor shall place these identifying markings on an exterior side surface of the container.

Storage containers shall be kept closed, and storage pads covered, except when access is needed by authorized personnel.

Special waste and hazardous waste shall be transported and disposed within 90 days from the date of generation.

669.08 Underground Storage Tank Removal. For the purposes of this section, an underground storage tank (UST) includes the underground storage tank, piping, electrical controls, pump island, vent pipes and appurtenances.

Prior to removing an UST, the Engineer shall determine whether the Department is considered an "owner" or "operator" of the UST as defined by the UST regulations (41 Ill. Adm. Code Part 176). Ownership of the UST refers to the Department's owning title to the UST during storage, use or dispensing of regulated substances. The Department may be considered an "operator" of the UST if it has control of, or has responsibility for, the daily operation of the UST. The Department may however voluntarily undertake actions to remove an UST from the ground without being deemed an "operator" of the UST.

In the event the Department is deemed not to be the "owner" or "operator" of the UST, the OSFM removal permit shall reflect who was the past "owner" or "operator" of the UST. If the "owner" or "operator" cannot be determined from past UST registration documents from OSFM, then the OSFM removal permit will state the "owner" or "operator" of the UST is the Department. The Department's Office of Chief Counsel (OCC) will review all UST removal permits prior to submitting any removal permit to the OSFM. If the Department is not the "owner" or "operator" of the UST then it will not register the UST or pay any registration fee.

The Contractor shall be responsible for obtaining permits required for removing the UST, notification to the OSFM, using an OSFM certified tank contractor, removal and disposal of the UST and its contents, and preparation and submittal of the OSFM Site Assessment Report in accordance with 41 Ill. Admin. Code Part 176.330.

The Contractor shall contact the Engineer and the OSFM's office at least 72 hours prior to removal to confirm the OSFM inspector's presence during the UST removal. Removal, transport, and disposal of the UST shall be according to the applicable portions of the latest revision of the "American Petroleum Institute (API) Recommended Practice 1604".

The Contractor shall collect and analyze tank content (sludge) for disposal purposes. The Contractor shall remove as much of the regulated substance from the UST system as necessary to prevent further release into the environment. All contents within the tank shall be removed, transported and disposed of, or recycled. The tank shall be removed and rendered empty according to IEPA definition.

The Contractor shall collect soil samples from the bottom and sidewalls of the excavated area in accordance with 35 Ill. Admin. Code Part 734.210(h) after the required backfill has been removed during the initial response action, to determine the level of contamination remaining in the ground, regardless if a release is confirmed or not by the OSFM on-site inspector.

In the event the UST is designated a leaking underground storage tank (LUST) by the OSFM's inspector, or confirmation by analytical results, the Contractor shall notify the Engineer and the District Environmental Studies Unit (DESU). Upon confirmation of a release of contaminants and notifications to the Engineer and DESU, the Contractor shall report the release to the Illinois Emergency Management Agency (IEMA) (e.g., by telephone or electronic mail) and provide them with whatever information is available ("owner" or "operator" shall be stated as the past registered "owner" or "operator", or the IDOT District in which the tank is located and the DESU Manager).

The Contractor shall perform the following initial response actions if a release is indicated by the OSFM inspector:

(a) Take immediate action to prevent any further release of the regulated substance to the environment, which may include removing, at the Engineer's discretion, and disposing of up to 4 ft (1.2 m) of the contaminated material, as measured from the outside dimension of the tank;

(b) Identify and mitigate fire, explosion and vapor hazards;

(c) Visually inspect any above ground releases or exposed below ground releases and prevent further migration of the released substance into surrounding soils and groundwater; and

(d) Continue to monitor and mitigate any additional fire and safety hazards posed by vapors and free product that have migrated from the tank excavation zone and entered into subsurface structures (such as sewers or basements).

The tank excavation shall be backfilled according to applicable portions of Sections 205, 208, and 550 with a material that will compact and develop stability. All uncontaminated concrete and soil removed during tank extraction may be used to backfill the excavation, at the discretion of the Engineer.

After backfilling the excavation, the site shall be graded and cleaned.

669.09 Regulated Substances Final Construction Report. Not later than 90 days after completing this work, the Contractor shall submit a "Regulated Substances Final Construction Report (RSFCR)" to the Engineer using form BDE 2733 and required attachments. The form shall be signed by an Illinois licensed Professional Engineer or Professional Geologist.

669.10 Method of Measurement. Non-special waste, special waste, and hazardous waste soil will be measured for payment according to Article 202.07(b) when performing earth excavation, Article 502.12(b) when excavating for structures, or by computing the volume of the trench using the maximum trench width permitted and the actual depth of the trench.

Groundwater containerized and transported off-site for management, storage, and disposal will be measured for payment in gallons (liters).

Backfill plugs will be measured in cubic yards (cubic meters) in place, except the quantity for which payment will be made shall not exceed the volume of the trench, as computed by using the maximum width of trench permitted by the Specifications and the actual depth of the trench, with a deduction for the volume of the pipe.

Engineered Barriers will be measured for payment in square yards (square meters).

669.11 Basis of Payment. The work of preparing, submitting and administering a Regulated Substances Pre-Construction Plan will be paid for at the contract lump sum price for REGULATED SUBSTANCES PRE-CONSTRUCTION PLAN.

Regulated substances monitoring, including completion of form BDE 2732 for each day of work, will be paid for at the contract unit price per calendar day, or fraction thereof to the nearest 0.5 calendar day, for REGULATED SUBSTANCES MONITORING.

The installation of engineered barriers will be paid for at the contract unit price per square yard (square meter) for ENGINEERED BARRIER.

The work of UST removal, soil excavation, soil and content sampling, the management of excavated soil and UST content, and UST disposal, will be paid for at the contract unit price per each for UNDERGROUND STORAGE TANK REMOVAL.

The transportation and disposal of soil and other materials from an excavation determined to be contaminated will be paid for at the contract unit price per cubic yard (cubic meter) for

NON-SPECIAL WASTE DISPOSAL, SPECIAL WASTE DISPOSAL, or HAZARDOUS WASTE DISPOSAL.

The transportation and disposal of groundwater from an excavation determined to be contaminated will be paid for at the contract unit price per gallon (liter) for SPECIAL WASTE GROUNDWATER DISPOSAL or HAZARDOUS WASTE GROUNDWATER DISPOSAL. When groundwater is discharged to a sanitary or combined sewer by permit, the cost will be paid for according to Article 109.05.

Backfill plugs will be paid for at the contract unit price per cubic yard (cubic meter) for BACKFILL PLUGS.

Payment for temporary staging of soil classified according to Articles 669.05(a)(1), (a)(3), (a)(4), (a)(5), (a)(6), or (b)(2) will be paid for according to Article 109.04. The Department will not be responsible for any additional costs incurred, if mismanagement of the staging area, storage containers, or their contents by the Contractor results in excess cost expenditure for disposal or other material management requirements.

Payment for accumulated stormwater removal and disposal will be according to Article 109.04. Payment will only be allowed if appropriate stormwater and erosion control methods were used.

Payment for decontamination, labor, material, and equipment for monitoring areas beyond the specified areas, with the Engineer's prior written approval, will be according to Article 109.04.

When the waste material for disposal requires sampling for landfill disposal acceptance, the samples shall be analyzed for TCLP VOCs, SVOCs, RCRA metals, pH, ignitability, and paint filter test. The analysis will be paid for at the contract unit price per each for SOIL DISPOSAL ANALYSIS using EPA Methods 1311 (extraction), 8260B for VOCs, 8270C for SVOCs, 6010B and 7470A for RCRA metals, 9045C for pH, 1030 for ignitability, and 9095A for paint filter.

The work of preparing, submitting and administering a Regulated Substances Final Construction Report will be paid for at the contract lump sum price REGULATED SUBSTANCES FINAL CONSTRUCTION REPORT."

80407

SILT FENCE, INLET FILTERS, GROUND STABILIZATION AND RIPRAP FILTER FABRIC (BDE)

Effective: November 1, 2019
Revised: April 1, 2020

Revise Article 280.02(m) and add Article 280.02(n) so the Standard Specifications read:

"(m) Above Grade Inlet Filter (Fitted) ..... 1081.15(j)
(n) Above Grade Inlet Filter (Non-Fitted) ..... 1081.15(k)"

Revise the last sentence of the first paragraph in Article 280.04(c) of the Standard Specifications to read:

"The protection shall be constructed with hay or straw bales, silt filter fence, above grade inlet filters (fitted and non-fitted), or inlet filters.

Revise the first sentence of the second paragraph in Article 280.04(c) of the Standard Specifications to read:

"When above grade inlet filters (fitted and non-fitted) are specified, they shall be of sufficient size to completely span and enclose the inlet structure."

Revise Article 1080.02 of the Standard Specifications to read:

"**1080.02 Geotextile Fabric.** The fabric for silt filter fence shall consist of woven fabric meeting the requirements of AASHTO M 288 for unsupported silt fence.

The fabric for ground stabilization shall consist of woven yarns or nonwoven filaments of polyolefins or polyesters. Woven fabrics shall be Class 2 and nonwoven fabrics shall be Class 1 according to AASHTO M 288.

The physical properties for silt fence and ground stabilization fabrics shall be according to the following.

PHYSICAL PROPERTIES			
	Silt Fence Woven [1/]	Ground Stabilization Woven [2/]	Ground Stabilization Nonwoven [2/]
Grab Strength, lb (N) [3/] ASTM D 4632	123 (550) MD 101 (450) XD	247 (1100) min. [4/]	202 (900) min. [4/]
Elongation/Grab Strain, % ASTM D 4632 [4/]	49 max.	49 max.	50 min.
Trapezoidal Tear Strength, lb (N) ASTM D 4533 [4/]	--	90 (400) min.	79 (350) min.

Puncture Strength, lb (N) ASTM D 6241 [4/]	--	494 (2200) min.	433 (1925) min.
Apparent Opening Size, Sieve No. (mm) ASTM D 4751 [5/]	30 (0.60) max.	40 (0.43) max.	40 (0.43) max.
Permittivity, sec^{-1} ASTM D 4491	0.05 min.		
Ultraviolet Stability, % retained strength after 500 hours of exposure ASTM D 4355	70 min.	50 min.	50 min.

1/ NTPEP results or manufacturer's certification to meet test requirements.

2/ NTPEP results to meet test requirements. Manufacturer shall have public release status and current reports on laboratory results in Test Data of NTPEP's DataMine.

3/ MD = Machine direction. XD = Cross-machine direction.

4/ Values represent the minimum average roll value (MARV) in the weaker principle direction, MD or XD.

5/ Values represent the maximum average roll value."

Revise Article 1080.03 of the Standard Specifications to read:

"**1080.03 Filter Fabric.** The filter fabric shall consist of woven yarns or nonwoven filaments of polyolefins or polyesters. Woven fabrics shall be Class 3 for riprap gradations RR 4 and RR 5, and Class 2 for RR 6 and RR 7 according to AASHTO M 288. Woven slit film geotextiles (i.e. geotextiles made from yarns of a flat, tape-like character) shall not be permitted. Nonwoven fabrics shall be Class 2 for riprap gradations RR 4 and RR 5, and Class 1 for RR 6 and RR 7 according to AASHTO M 288. After forming, the fabric shall be processed so that the yarns or filaments retain their relative positions with respect to each other. The fabric shall be new and undamaged.

The filter fabric shall be manufactured in widths of not less than 6 ft (2 m). Sheets of fabric may be sewn together with thread of a material meeting the chemical requirements given for the yarns or filaments to form fabric widths as required. The sheets of filter fabric shall be sewn together at the point of manufacture or another approved location.

The filter fabric shall be according to the following.

PHYSICAL PROPERTIES 1/				
	Gradation Nos. RR 4 & RR 5		Gradation Nos. RR 6 & RR 7	
	Woven	Nonwoven	Woven	Nonwoven
Grab Strength, lb (N) ASTM D 4632 2/	180 (800) min.	157 (700) min.	247 (1100) min.	202 (900) min.
Elongation/Grab Strain, % ASTM D 4632 2/	49 max.	50 min.	49 max.	50 min.
Trapezoidal Tear Strength, lb (N) ASTM D 4533 2/	67 (300) min.	56 (250) min.	90 (400) min.	79 (350) min.
Puncture Strength, lb (N) ASTM D 6241 2/	370 (1650) min.	309 (1375) min.	494 (2200) min.	433 (1925) min.
Ultraviolet Stability, % retained strength after 500 hours of exposure - ASTM D 4355	50 min.			

1/ NTPEP results to meet test requirements. Manufacturer shall have public release status and current reports on laboratory results in Test Data of NTPEP's DataMine.

2/ Values represent the minimum average roll value (MARV) in the weaker principle direction [machine direction (MD) or cross-machine direction (XD)].

As determined by the Engineer, the filter fabric shall meet the requirements noted in the following after an onsite investigation of the soil to be protected.

Soil by Weight (Mass) Passing the No. 200 sieve (75 μm), %	Apparent Opening Size, Sieve No. (mm) - ASTM D 4751 1/	Permittivity, sec^{-1} ASTM D 4491
49 max.	60 (0.25) max.	0.2 min.
50 min.	70 (0.22) max.	0.1 min.

1/ Values represent the maximum average roll value."

Revise Article 1081.15(h)(3)a of the Standard Specifications to read:

"a. Inner Filter Fabric Bag. The inner filter fabric bag shall be constructed of woven yarns or nonwoven filaments made of polyolefins or polyesters with a minimum silt and debris capacity of 2.0 cu ft (0.06 cu m). Woven fabric shall be Class 3 and nonwoven fabric shall be Class 2 according to AASHTO M 288. The fabric bag shall be according to the following.

PHYSICAL PROPERTIES		
	Woven	Nonwoven
Grab Strength, lb (N) ASTM D 4632 1/	180 (800) min.	157 (700) min.
Elongation/Grab Strain, % ASTM D 4632 1/	49 max.	50 min.
Trapezoidal Tear Strength, lb (N) ASTM D 4533 1/	67 (300) min.	56 (250) min.
Puncture Strength, lb (N) ASTM D 6241 1/	370 (1650) min.	309 (1375) min.
Apparent Opening Size, Sieve No. (mm) ASTM D 4751 2/	60 (0.25) max.	
Permittivity, sec^{-1} ASTM D 4491	2.0 min.	
Ultraviolet Stability, % retained strength after 500 hours of exposure – ASTM D 4355	70 min.	

1/ Values represent the minimum average roll value (MARV) in the weaker principle direction [machine direction (MD) or cross-machine direction (XD)].

2/ Values represent the maximum average roll value."

Revise Article 1081.15(i)(1) of the Standard Specifications to read:

"(i) Urethane Foam/Geotextile. Urethane foam/geotextile shall be triangular shaped having a minimum height of 10 in. (250 mm) in the center with equal sides and a minimum 20 in. (500 mm) base. The triangular shaped inner material shall be a low density urethane foam. The outer geotextile fabric cover shall consist of woven yarns or nonwoven filaments made of polyolefins or polyesters placed around the inner material and shall extend beyond both sides of the triangle a minimum of 18 in. (450 mm). Woven filter fabric shall be Class 3 and nonwoven filter fabric shall be Class 2 according to AASHTO M 288.

(1) The geotextile shall meet the following properties.

PHYSICAL PROPERTIES		
	Woven	Nonwoven
Grab Strength, lb (N) ASTM D 4632 1/	180 (800) min.	157 (700) min.
Elongation/Grab Strain, % ASTM D 4632 1/	49 max.	50 min.
Trapezoidal Tear Strength, lb (N) ASTM D 4533 1/	67 (300) min.	56 (250) min.
Puncture Strength, lb (N) ASTM D 6241 1/	370 (1650) min.	309 (1375) min.

Apparent Opening Size, Sieve No. (mm) ASTM D 4751 2/	30 (0.60) max.
Permittivity, sec^{-1} ASTM D 4491	2.0 min.
Ultraviolet Stability, % retained strength after 500 hours of exposure – ASTM D 4355	70 min.

1/ Values represent the minimum average roll value (MARV) in the weaker principle direction [machine direction (MD) or cross-machine direction (XD)].

2/ Values represent the maximum average roll value."

Add the following to Article 1081.15(i) of the Standard Specifications.

"(3) Certification. The manufacturer shall furnish a certificate with each shipment of urethane foam/geotextile assemblies stating the amount of product furnished and that the material complies with these requirements."

Revise the title and first sentence of Article 1081.15(j) of the Standards Specifications to read:

"(j) Above Grade Inlet Filters (Fitted). Above grade inlet filters (fitted) shall consist of a rigid polyethylene frame covered with a fitted geotextile filter fabric."

Revise Article 1081.15(j)(2) of the Standard Specifications to read:

(2) Fitted Geotextile Filter Fabric. The fitted geotextile filter fabric shall consist of woven yarns or nonwoven filaments made of polyolefins or polyesters. Woven filter fabric shall be Class 3 and nonwoven filter fabric shall be Class 2 according to AASHTO M 288. The filter shall be fabricated to provide a direct fit to the frame. The top of the filter shall integrate a coarse screen with a minimum apparent opening size of 1/2 in. (13 mm) to allow large volumes of water to pass through in the event of heavy flows. The filter shall have integrated anti-buoyancy pockets capable of holding a minimum of 3.0 cu ft (0.08 cu m) of stabilization material. Each filter shall have a label with the following information sewn to or otherwise permanently adhered to the outside: manufacturer's name, product name, and lot, model, or serial number. The fitted geotextile filter fabric shall be according to the table in Article 1081.15(h)(3)a above."

Add Article 1081.15(k) to the Standard Specifications to read:

"(k) Above Grade Inlet Filters (Non-Fitted). Above grade inlet filters (non-fitted) shall consist of a geotextile fabric surrounding a metal frame. The frame shall consist of either a) a circular cage formed of welded wire mesh, or b) a collapsible aluminum frame, as described below.

(1) Frame Construction.

a) Welded Wire Mesh Frame. The frame shall consist of 6 in. x 6 in. (150 mm x 150 mm) welded wire mesh formed of #10 gauge (3.42 mm) steel conforming to ASTM A 185. The mesh shall be 30 in. (750 mm) tall and formed into a 42 in. (1.05 m) minimum diameter cylinder.

b) Collapsible Aluminum Frame. The collapsible aluminum frame shall consist of grade 6036 aluminum. The frame shall have anchor lugs that attach it to the inlet grate, which shall resist movement from water and debris. The collapsible joints of the frame shall have a locking device to secure the vertical members in place, which shall prevent the frame from collapsing while under load from water and debris.

(2) Geotextile Fabric. The geotextile fabric shall consist of woven yarns or nonwoven filaments made of polyolefins or polyesters. The woven filter fabric shall be a Class 3 and the nonwoven filter fabric shall be a Class 2 according to AASHTO M 288. The geotextile fabric shall be according to the table in Article 1081.15(h)(3)a above.

(3) Geotechnical Fabric Attachment to the Frame.

a) Welded Wire Mesh Frame. The woven or nonwoven geotextile fabric shall be wrapped 3 in. (75 mm) over the top member of a 6 in. x 6 in. (150 mm x 150 mm) welded wire mesh frame and secured with fastening rings constructed of wire conforming to ASTM A 641, A 809, A 370, and A 938 at 6 in. (150 mm) on center. The fastening rings shall penetrate both layers of geotextile and securely close around the steel mesh. The geotextile shall be secured to the sides of the welded wire mesh with fastening rings at a spacing of 1 per sq ft (11 per sq m) and securely close around a steel member.

b) Collapsible Aluminum Frame. The woven or nonwoven fabric shall be secured to the aluminum frame along the top and bottom of the frame perimeter with strips of aluminum secured to the perimeter member, such that the anchoring system provides a uniformly distributed stress throughout the geotechnical fabric.

(4) Certification. The manufacturer shall furnish a certificate with each shipment of above grade inlet filter assemblies stating the amount of product furnished and that the material complies with these requirements."

80419

SUBCONTRACTOR AND DBE PAYMENT REPORTING (BDE)

Effective: April 2, 2018

Add the following to Section 109 of the Standard Specifications.

"**109.14 Subcontractor and Disadvantaged Business Enterprise Payment Reporting.** The Contractor shall report all payments made to the following parties:

(a) first tier subcontractors;

(b) lower tier subcontractors affecting disadvantaged business enterprise (DBE) goal credit;

(c) material suppliers or trucking firms that are part of the Contractor's submitted DBE utilization plan.

The report shall be made through the Department's on-line subcontractor payment reporting system within 21 days of making the payment."

80397

SUBCONTRACTOR MOBILIZATION PAYMENTS (BDE)

Effective: November 2, 2017
Revised: April 1, 2019

Replace the second paragraph of Article 109.12 of the Standard Specifications with the following:

"This mobilization payment shall be made at least seven days prior to the subcontractor starting work. The amount paid shall be at the following percentage of the amount of the subcontract reported on form BC 260A submitted for the approval of the subcontractor's work.

Value of Subcontract Reported on Form BC 260A	Mobilization Percentage
Less than $10,000	25%
$10,000 to less than $20,000	20%
$20,000 to less than $40,000	18%
$40,000 to less than $60,000	16%
$60,000 to less than $80,000	14%
$80,000 to less than $100,000	12%
$100,000 to less than $250,000	10%
$250,000 to less than $500,000	9%
$500,000 to $750,000	8%
Over $750,000	7%"

80391

SUBMISSION OF PAYROLL RECORDS (BDE)

Effective: April 1, 2021

Revise Item 3 of Section IV of Check Sheet #5 of the Recurring Special Provisions to read:

"3. Submission of Payroll Records. The Contractor and each subcontractor shall, no later than the 15th day of each calendar month, file a certified payroll for the immediately preceding month to the Illinois Department of Labor (IDOL) through the Illinois Prevailing Wage Portal in compliance with the State Prevailing Wage Act (820 ILCS 130). The portal can be found on the IDOL website at https://www2.illinois.gov/idol/Laws-Rules/CONMED/Pages/Prevailing-Wage-Portal.aspx. Payrolls shall be submitted in the format prescribed by the IDOL."

80437

TEMPORARY PAVEMENT MARKING (BDE)

Effective: April 1, 2012
Revised: April 1, 2017

Revise Article 703.02 of the Standard Specifications to read:

"**703.02 Materials.** Materials shall be according to the following.

(a) Pavement Marking Tape, Type I and Type III 1095.06
(b) Paint Pavement Markings 1095.02
(c) Pavement Marking Tape, Type IV ..... 1095.11"

Revise the second paragraph of Article 703.05 of the Standard Specifications to read:

"Type I marking tape or paint shall be used at the option of the Contractor, except paint shall not be applied to the final wearing surface unless authorized by the Engineer for late season applications where tape adhesion would be a problem. Type III or Type IV marking tape shall be used on the final wearing surface when the temporary pavement marking will conflict with the permanent pavement marking such as on tapers, crossovers and lane shifts."

Revise Article 703.07 of the Standard Specifications to read:

"**703.07 Basis of Payment.** This work will be paid for as follows.

a) Short Term Pavement Marking. Short term pavement marking will be paid for at the contract unit price per foot (meter) for SHORT TERM PAVEMENT MARKING. Removal of short term pavement markings will be paid for at the contract unit price per square foot (square meter) for SHORT TERM PAVEMENT MARKING REMOVAL.

b) Temporary Pavement Marking. Where the Contractor has the option of material type, temporary pavement marking will be paid for at the contract unit price per foot (meter) for TEMPORARY PAVEMENT MARKING of the line width specified, and at the contract unit price per square foot (square meter) for TEMPORARY PAVEMENT MARKING LETTERS AND SYMBOLS.

Where the Department specifies the use of pavement marking tape, the Type III or Type IV temporary pavement marking will be paid for at the contract unit price per foot (meter) for PAVEMENT MARKING TAPE, TYPE III or PAVEMENT MARKING TAPE, TYPE IV of the line width specified and at the contract unit price per square feet (square meter) for PAVEMENT MARKING TAPE, TYPE III - LETTERS AND SYMBOLS or PAVEMENT MARKING TAPE, TYPE IV – LETTERS AND SYMBOLS.

Removal of temporary pavement markings will be paid for at the contract unit price per square foot (square meter) for TEMPORARY PAVEMENT MARKING REMOVAL.

When temporary pavement marking is shown on the Standard, the cost of the temporary pavement marking and its removal will be included in the cost of the Standard."

Add the following to Section 1095 of the Standard Specifications:

"**1095.11 Pavement Marking Tape, Type IV.** The temporary, preformed, patterned markings shall consist of a white or yellow tape with wet retroreflective media incorporated to provide immediate and continuing retroreflection during both wet and dry conditions. The tape shall be manufactured without the use of heavy metals including lead chromate pigments or other similar, lead-containing chemicals.

The white and yellow Type IV marking tape shall meet the Type III requirements of Article 1095.06 and the following.

(a) Composition. The retroreflective pliant polymer pavement markings shall consist of a mixture of high-quality polymeric materials, pigments and glass beads distributed throughout its base cross-sectional area, with a layer of wet retroreflective media bonded to a durable polyurethane topcoat surface. The patterned surface shall have approximately 40% ± 10% of the surface area raised and presenting a near vertical face to traffic from any direction. The channels between the raised areas shall be substantially free of exposed beads or particles.

(b) Retroreflectance. The white and yellow markings shall meet the following for initial dry and wet retroreflectance.

(1) Dry Retroreflectance. Dry retroreflectance shall be measured under dry conditions according to ASTM D 4061 and meet the values described in Article 1095.06 for Type III tape.

(2) Wet Retroreflectance. Wet retroreflectance shall be measured under wet conditions according to ASTM E 2177 and meet the values shown in the following table.

Wet Retroreflectance, Initial R_L

Color	R_L 1.05/88.76
White	300
Yellow	200

(c) Color. The material shall meet the following requirements for daylight reflectance and color, when tested, using a color spectrophotometer with 45 degrees circumferential/zero degree geometry, illuminant D65, and a two degree observer angle. The color instrument shall measure the visible spectrum from 380 to 720 nm with a wavelength measurement interval and spectral bandpass of 10 nm.

Color	Daylight Reflectance %Y
White	65 minimum
*Yellow	36-59

*Shall match Federal 595 Color No. 33538 and the chromaticity limits as follows.

x	0.490	0.475	0.485	0.530
y	0.470	0.438	0.425	0.456

(d) Skid Resistance. The surface of the markings shall provide an average minimum skid resistance of 50 BPN when tested according to ASTM E 303.

(e) Sampling, Testing, Acceptance, and Certification. Prior to approval and use of the wet reflective, temporary, removable pavement marking tape, the manufacturer shall submit a notarized certification from an independent laboratory, together with the results of all tests, stating that the material meets the requirements as set forth herein. The certification test report shall state the lot tested, manufacturer's name, and date of manufacture.

After approval by the Department, samples and certification by the manufacturer shall be submitted for each batch used. The manufacturer shall submit a certification stating that the material meets the requirements as set forth herein and is essentially identical to the material sent for qualification. The certification shall state the lot tested, manufacturer's name, and date of manufacture.

All costs of testing (other than tests conducted by the Department) shall be borne by the manufacturer."

80298

TRAFFIC CONTROL DEVICES - CONES (BDE)

Effective: January 1, 2019

Revise Article 701.15(a) of the Standard Specifications to read:

"(a) Cones. Cones are used to channelize traffic. Cones used to channelize traffic at night shall be reflectorized; however, cones shall not be used in nighttime lane closure tapers or nighttime lane shifts."

Revise Article 1106.02(b) of the Standard Specifications to read:

"(b) Cones. Cones shall be predominantly orange. Cones used at night that are 28 to 36 in. (700 to 900 mm) in height shall have two white circumferential stripes. If non-reflective spaces are left between the stripes, the spaces shall be no more than 2 in. (50mm) in width. Cones used at night that are taller than 36 in. (900 mm) shall have a minimum of two white and two fluorescent orange alternating, circumferential stripes with the top stripe being fluorescent orange. If non-reflective spaces are left between the stripes, the spaces shall be no more than 3 in. (75 mm) in width.

The minimum weights for the various cone heights shall be 4 lb for 18 in. (2 kg for 450 mm), 7 lb for 28 in. (3 kg for 700 mm), and 10 lb for 36 in. (5 kg for 900 mm) with a minimum of 60 percent of the total weight in the base. Cones taller than 36 in. shall be weighted per the manufacturer's specifications such that they are not moved by wind or passing traffic."

80409

VEHICLE AND EQUIPMENT WARNING LIGHTS (BDE)

Effective: November 1, 2021

Add the following paragraph after the first paragraph of Article 701.08 of the Standard Specifications:

"The Contractor shall equip all vehicles and equipment with high-intensity oscillating, rotating, or flashing, amber or amber-and-white, warning lights which are visible from all directions. The lights shall be in operation while the vehicle or equipment is engaged in construction operations."

80439

WARM MIX ASPHALT (BDE)

Effective: January 1, 2012
Revised: April 1, 2016

Description. This work shall consist of designing, producing and constructing Warm Mix Asphalt (WMA) in lieu of Hot Mix Asphalt (HMA) at the Contractor's option. Work shall be according to Sections 406, 407, 408, 1030, and 1102 of the Standard Specifications, except as modified herein. In addition, any references to HMA in the Standard Specifications, or the special provisions shall be construed to include WMA.

WMA is an asphalt mixture which can be produced at temperatures lower than allowed for HMA utilizing approved WMA technologies. WMA technologies are defined as the use of additives or processes which allow a reduction in the temperatures at which HMA mixes are produced and placed. WMA is produced by the use of additives, a water foaming process, or combination of both. Additives include minerals, chemicals or organics incorporated into the asphalt binder stream in a dedicated delivery system. The process of foaming injects water into the asphalt binder stream, just prior to incorporation of the asphalt binder with the aggregate.

Approved WMA technologies may also be used in HMA provided all the requirements specified herein, with the exception of temperature, are met. However, asphalt mixtures produced at temperatures in excess of 275 °F (135 °C) will not be considered WMA when determining the grade reduction of the virgin asphalt binder grade.

Equipment.

Revise the first paragraph of Article 1102.01 of the Standard Specifications to read:

"**1102.01 Hot-Mix Asphalt Plant.** The hot-mix asphalt (HMA) plant shall be the batch-type, continuous-type, or dryer drum plant. The plants shall be evaluated for prequalification rating and approval to produce HMA according to the current Bureau of Materials and Physical Research Policy Memorandum, "Approval of Hot-Mix Asphalt Plants and Equipment". Once approved, the Contractor shall notify the Bureau of Materials and Physical Research to obtain approval of all plant modifications. The plants shall not be used to produce mixtures concurrently for more than one project or for private work unless permission is granted in writing by the Engineer. The plant units shall be so designed, coordinated and operated that they will function properly and produce HMA having uniform temperatures and compositions within the tolerances specified. The plant units shall meet the following requirements."

Add the following to Article 1102.01(a) of the Standard Specifications.

"(11) Equipment for Warm Mix Technologies.

a. Foaming. Metering equipment for foamed asphalt shall have an accuracy of ± 2 percent of the actual water metered. The foaming control system shall be electronically interfaced with the asphalt binder meter.

b. Additives. Additives shall be introduced into the plant according to the supplier's recommendations and shall be approved by the Engineer. The system for introducing the WMA additive shall be interlocked with the aggregate feed or weigh system to maintain correct proportions for all rates of production and batch sizes."

Mix Design Verification.

Add the following to Article 1030.04 of the Standard Specifications.

"(e) Warm Mix Technologies.

(1) Foaming. WMA mix design verification will not be required when foaming technology is used alone (without WMA additives). However, the foaming technology shall only be used on HMA designs previously approved by the Department.

(2) Additives. WMA mix designs utilizing additives shall be submitted to the Engineer for mix design verification."

Construction Requirements.

Revise the second paragraph of Article 406.06(b)(1) of the Standard Specifications to read:

"The HMA shall be delivered at a temperature of 250 to 350 °F (120 to 175 °C). WMA shall be delivered at a minimum temperature of 215 °F (102 °C)."

Basis of Payment.

This work will be paid at the contract unit price bid for the HMA pay items involved. Anti-strip will not be paid for separately, but shall be considered as included in the cost of the work.

80288

WORK ZONE TRAFFIC CONTROL DEVICES (BDE)

Effective: March 2, 2020

Add the following to Article 701.03 of the Standard Specifications:

"(q) Temporary Sign Supports .....1106.02"

Revise the third paragraph of Article 701.14 of the Standard Specifications to read:

"For temporary sign supports, the Contractor shall provide a FHWA eligibility letter for each device used on the contract. The letter shall provide information for the set-up and use of the device as well as a detailed drawing of the device. The signs shall be supported within 20 degrees of vertical. Weights used to stabilize signs shall be attached to the sign support per the manufacturer's specifications."

Revise the first paragraph of Article 701.15 of the Standard Specifications to read:

"**701.15 Traffic Control Devices.** For devices that must meet crashworthiness standards, the Contractor shall provide a manufacturer's self-certification or a FHWA eligibility letter for each Category 1 device and a FHWA eligibility letter for each Category 2 and Category 3 device used on the contract. The self-certification or letter shall provide information for the set-up and use of the device as well as a detailed drawing of the device."

Revise the first six paragraphs of Article 1106.02 of the Standard Specifications to read:

"**1106.02 Devices.** Work zone traffic control devices and combinations of devices shall meet crashworthiness standards for their respective categories. The categories are as follows.

Category 1 includes small, lightweight, channelizing and delineating devices that have been in common use for many years and are known to be crashworthy by crash testing of similar devices or years of demonstrable safe performance. These include cones, tubular markers, plastic drums, and delineators, with no attachments (e.g. lights). Category 1 devices manufactured after December 31, 2019 shall be MASH-16 compliant. Category 1 devices manufactured on or before December 31, 2019, and compliant with NCHRP 350 or MASH 2009, may be used on contracts let before December 31, 2024.

Category 2 includes devices that are not expected to produce significant vehicular velocity change but may otherwise be hazardous. These include vertical panels with lights, barricades, temporary sign supports, and Category 1 devices with attachments (e.g. drums with lights). Category 2 devices manufactured after December 31, 2019 shall be MASH-16 compliant. Category 2 devices manufactured on or before December 31, 2019, and compliant with NCHRP 350 or MASH 2009, may be used on contracts let before December 31, 2024.

Category 3 includes devices that are expected to cause significant velocity changes or other potentially harmful reactions to impacting vehicles. These include crash cushions (impact

attenuators), truck mounted attenuators, and other devices not meeting the definitions of Category 1 or 2. Category 3 devices manufactured after December 31, 2019 shall be MASH-16 compliant. Category 3 devices manufactured on or before December 31, 2019, and compliant with NCHRP 350 or MASH 2009, may be used on contracts let before December 31, 2029. Category 3 devices shall be crash tested for Test Level 3 or the test level specified.

Category 4 includes portable or trailer-mounted devices such as arrow boards, changeable message signs, temporary traffic signals, and area lighting supports. It is preferable for Category 4 devices manufactured after December 31, 2019 to be MASH-16 compliant; however, there are currently no crash tested devices in this category, so it remains exempt from the NCHRP 350 or MASH compliance requirement.

For each type of device, when no more than one MASH-16 compliant is available, an NCHRP 350 or MASH-2009 compliant device may be used, even if manufactured after December 31, 2019."

Revise Articles 1106.02(g), 1106.02(k), and 1106.02(l) to read:

"(g) Truck Mounted/Trailer Mounted Attenuators. The attenuator shall be approved for use at Test Level 3. Test Level 2 may be used for normal posted speeds less than or equal to 45 mph.

(k) Temporary Water Filled Barrier. The water filled barrier shall be a lightweight plastic shell designed to accept water ballast and be on the Department's qualified product list.

Shop drawings shall be furnished by the manufacturer and shall indicate the deflection of the barrier as determined by acceptance testing; the configuration of the barrier in that test; and the vehicle weight, velocity, and angle of impact of the deflection test. The Engineer shall be provided one copy of the shop drawings.

(l) Movable Traffic Barrier. The movable traffic barrier shall be on the Department's qualified product list.

Shop drawings shall be furnished by the manufacturer and shall indicate the deflection of the barrier as determined by acceptance testing; the configuration of the barrier in that test; and the vehicle weight, velocity, and angle of impact of the deflection test. The Engineer shall be provided one copy of the shop drawings. The barrier shall be capable of being moved on and off the roadway on a daily basis."

80427

Local Roads Index of Special Provisions

LR107-4 Insurance 4-2

LR109-3 Fuel Cost Adjustment for Local Lettings 4-3

LR542 Pipe Culverts 4-7

LR1030 Growth Curve 4-8

State of Illinois
Department of Transportation
Bureau of Local Roads and Streets

SPECIAL PROVISION FOR INSURANCE

Effective: February 1, 2007
Revised: August 1, 2007

All references to Sections or Articles in this specification shall be construed to mean specific Section or Article of the Standard Specifications for Road and Bridge Construction, adopted by the Department of Transportation.

The Contractor shall name the following entities as additional insured under the Contractor's general liability insurance policy in accordance with Article 107.27:

City of DeKalb

DeKalb County Highway Department

Jacob & Hefner Associates, Inc.

Kimley-Horn Associates, Inc.

The entities listed above and their officers, employees, and agents shall be indemnified and held harmless in accordance with Article 107.26.

State of Illinois
DEPARTMENT OF TRANSPORTATION
Bureau of Local Roads and Streets

SPECIAL PROVISION FOR FUEL COST ADJUSTMENT FOR LOCAL LETTINGS

(RETURN FORM WITH BID)

Effective: June 16, 2017
Revised:

Description. Fuel cost adjustments will be made to provide additional compensation to the Contractor, or a credit to the project owner, for fluctuations in fuel prices when optioned by the Contractor. The bidder shall indicate on the attached form whether or not this special provision will be part of the contract and submit the completed form with his/her bid. Failure to submit the form or failure to indicate contract number, company name and sign and date the form shall make this contract exempt of fuel cost adjustments for all categories of work. Failure to indicate "Yes" for any category of work will make that category of work exempt from fuel cost adjustment.

General. The fuel cost adjustment shall apply to contract pay items as grouped by category. The adjustment shall only apply to those categories of work checked "Yes", and only when the cumulative plan quantities for a category exceed the required threshold. Adjustments to work items in a category, either up or down, and extra work paid for by agreed unit price will be subject to fuel cost adjustment only when the category representing the added work was subject to the fuel cost adjustment. Extra work paid for at a lump sum price or by force account will not be subject to fuel cost adjustment. Category descriptions and thresholds for application and the fuel usage factors which are applicable to each are as follows:

(a) Categories of Work.

(1) Category A: Earthwork. Contract pay items performed under Sections 202, 204, and 206 of the IDOT Standard Specifications for Road and Bridge Construction including any modified standard or nonstandard items where the character of the work to be performed is considered earthwork. The cumulative total of all applicable item plan quantities shall exceed 25,000 cu yd (20,000 cu m). Included in the fuel usage factor is a weighted average 0.10 gal/cu yd (0.50 liters/cu m) factor for trucking.

(2) Category B: Subbases and Aggregate Base Courses. Contract pay items constructed under Sections 311, 312 and 351 of the IDOT Standard Specifications for Road and Bridge Construction including any modified standard or nonstandard items where the character of the work to be performed is considered construction of a subbase or aggregate, stabilized or modified base course. The cumulative total of all applicable item plan quantities shall exceed 5000 tons (4500 metric tons). Included in the fuel usage factor is a 0.60 gal/ton (2.50 liters/metric ton) factor for trucking.

(3) Category C: Hot-Mix Asphalt (HMA) Bases, Pavements and Shoulders. Contract pay items constructed under Sections 355, 406, 407 and 482 of the IDOT Standard Specifications for Road and Bridge Construction including any modified standard or nonstandard items where the character of the work to be performed is considered HMA bases, pavements and shoulders. The cumulative total of all applicable item plan quantities shall exceed 5000 tons (4500 metric tons). Included in the fuel usage factor is 0.60 gal/ton (2.50 liters/metric ton) factor for trucking.

(4) Category D: Portland Cement Concrete (PCC) Bases, Pavements and Shoulders. Contract pay items constructed under Sections 353, 420, 421 and 483 of the IDOT Standard Specifications for Road and Bridge Construction including any modified standard or nonstandard items where the character of the work to be performed is considered PCC base, pavement or shoulder. The cumulative total of all applicable item plan quantities shall exceed 7500 sq yd (6000 sq m). Included in the fuel usage factor is 1.20 gal/cu yd (5.94 liters/cu m) factor for trucking.

(5) Category E: Structures. Structure items having a cumulative bid price that exceeds $250,000 for pay items constructed under Sections 502, 503, 504, 505, 512, 516 and 540 of the IDOT Standard Specifications for Road and Bridge Construction including any modified standard or nonstandard items where the character of the work to be performed is considered structure work when similar to that performed under these sections and not included in categories A through D.

(b) Fuel Usage Factors.

English Units

Category	Factor	Units
A - Earthwork	0.34	gal / cu yd
B – Subbase and Aggregate Base courses	0.62	gal / ton
C – HMA Bases, Pavements and Shoulders	1.05	gal / ton
D – PCC Bases, Pavements and Shoulders	2.53	gal / cu yd
E – Structures	8.00	gal / $1000

Metric Units

Category	Factor	Units
A - Earthwork	1.68	liters / cu m
B – Subbase and Aggregate Base courses	2.58	liters / metric ton
C – HMA Bases, Pavements and Shoulders	4.37	liters / metric ton
D – PCC Bases, Pavements and Shoulders	12.52	liters / cu m
E – Structures	30.28	liters / $1000

(c) Quantity Conversion Factors.

Category	Conversion	Factor
B	sq yd to ton	0.057 ton / sq yd / in depth
	sq m to metric ton	0.00243 metric ton / sq m / mm depth
C	sq yd to ton	0.056 ton / sq yd / in depth
	sq m to metric ton	0.00239 m ton / sq m / mm depth
D	sq yd to cu yd	0.028 cu yd / sq yd / in depth
	sq m to cu m	0.001 cu m / sq m / mm depth

Method of Adjustment. Fuel cost adjustments will be computed as follows.

$CA = (FPI_P - FPI_L) \times FUF \times Q$

Where: CA = Cost Adjustment, $

FPI_P = Fuel Price Index, as published by the Department of Transportation for the month the work is performed, $/gal ($/liter)

FPI_L = Fuel Price Index, as published by the Department of Transportation for the month prior to the letting for work paid for at the contract price; or for the month the agreed unit price letter is submitted by the Contractor for extra work paid for by agreed unit price, $/gal ($/liter)

FUF = Fuel Usage Factor in the pay item(s) being adjusted

Q = Authorized construction Quantity, tons (metric tons) or cu yd (cu m)

The entire FUF indicated in paragraph (b) will be used regardless of use of trucking to perform the work.

Basis of Payment. Fuel cost adjustments may be positive or negative but will only be made when there is a difference between the FPI_L and FPI_P in excess of five percent, as calculated by:

Percent Difference = $\{(FPI_L - FPI_P) \div FPI_L\} \times 100$

Fuel cost adjustments will be calculated for each calendar month in which applicable work is performed; and will be paid or deducted when all other contract requirements for the items of work are satisfied. The adjustments shall not apply during contract time subject to liquidated damages for completion of the entire contract.

Return With Bid

OPTION FOR FUEL COST ADJUSTMENT

The bidder shall submit this completed form with his/her bid. Failure to submit the form or properly complete contract number, company name, and sign and date the form shall make this contract exempt of fuel cost adjustments in all categories. Failure to indicate "Yes" for any category of work at the time of bid will make that category of work exempt from fuel cost adjustment. After award, this form, when submitted shall become part of the contract.

Contract No.: _____

Company Name: _____

Contractor's Option:

Is your company opting to include this special provision as part of the contract plans for the following categories of work?

Category A Earthwork.	Yes	☐
Category B Subbases and Aggregate Base Courses	Yes	☐
Category C HMA Bases, Pavements and Shoulders	Yes	☐
Category D PCC Bases, Pavements and Shoulders	Yes	☐
Category E Structures	Yes	☐

Signature:_____ **Date:**_____

State of Illinois
DEPARTMENT OF TRANSPORTATION
Bureau of Local Roads and Streets

SPECIAL PROVISION FOR PIPE CULVERTS, TYPE 1, (FURNISHED)

Effective: September 1, 1964
Revised: January 1, 2007

All references to Sections or Articles in this specification shall be construed to mean a specific Section or Article of the Standard Specifications for Road and Bridge Construction, adopted by the Department of Transportation.

Materials. Pipe Culverts, Type 1 (Furnished) of diameters or equivalent round size specified shall conform to the applicable portions of Section 542 and the following Articles:

Item	Article
~~(a) Corrugated Steel Culvert Pipe~~	~~1006.01(a)~~
~~(b) Corrugated Steel Pipe Arch~~	~~1006.01(a)~~
(c) Precoated Galvanized Corrugated Steel Pipe	1006.01(b)
(d) Precoated Galvanized Corrugated Steel Pipe Arch	1006.01(b)
(e) Aluminized Steel Type 2 Corrugated Pipe	1006.01(a)
(f) Aluminized Steel Type 2 Corrugated Pipe Arch	1006.01(a)
(g) Bituminous Coated Corrugated Steel Pipe	1006.01(a)
(h) Bituminous Coated Corrugated Steel Pipe Arch	1006.01(a)
(i) Zinc and Aramid Fiber Composite Coated Corrugated Steel Pipe	1006.01(a)
(j) Corrugated Aluminum Alloy Pipe	1006.03
(k) Corrugated Aluminum Alloy Culvert Pipe Arch	1006.03
(l) Reinforced Concrete Arch Culvert, Storm Drain and Sewer Pipe	1042.06(c)
(m) Reinforced Concrete Culvert, Storm Drain, and Sewer Pipe	1042.06(a)
~~(n) Concrete Sewer, Storm Drain, and Culvert Pipe~~	~~1042.06(d)~~
(o) Reinforced Concrete Elliptical Culvert, Storm Drain, and Sewer Pipe	1042.06(b)
~~(p) Polyvinyl Chloride (PVC) Pipe~~	~~1040.03~~
~~(q) Corrugated Polyvinyl Chloride (PVC) Pipe with a Smooth Interior~~	~~1040.03(d)~~
~~(r) Polyvinyl Chloride (PVC) Profile Wall Pipe - 794~~	~~1040.03(e)~~
~~(s) Polyethylene (PE) Pipe with a Smooth Interior~~	~~1040.04(d)~~
~~(t) Polyethylene (PE) Profile Wall Pipe~~	~~1040.04(c)~~
~~(u) Polyvinyl Chloride (PVC) Profile Wall Pipe - 304~~	~~1040.03(f)~~
~~(v) Corrugated Polyethylene (PE) Pipe with a Smooth Interior~~	~~1040.04(a)~~
~~(w) Extra Strength Clay Pipe~~	~~1040.02~~
~~(x) Clay Sewer Pipe~~	~~1040.02~~

Bids may be submitted for any kind of pipe culvert listed in the Specifications for the "Type" herein specified, except for those **struck** above.

The thickness or class of pipe shall conform to the table in Article 542.03. The respective AASHTO specifications for these materials require the pipe to be stamped with metal thickness.

When applicable, connecting bands shall be fabricated from the same type of base metal as is used for the pipe.

Method of Measurement. Pipe culverts of the diameter specified will be measured for payment in meters (feet).

Basis of Payment. The material will be paid for at the contract unit price bid per meter (foot) of PIPE CULVERTS, TYPE 1, (FURNISHED) of the diameter or equivalent round size specified, at the delivery point specified. The bid price shall include all connecting bands when steel or aluminum pipe is furnished.

State of Illinois
DEPARTMENT OF TRANSPORTATION
Bureau of Local Roads & Streets

SPECIAL PROVISION FOR GROWTH CURVE

Effective: March 1, 2008
Revised: January 1, 2010

All references to Sections and Articles in this Special Provision shall be construed to mean specific Sections and Articles in the Standard Specifications for Road and Bridge Construction adopted by the Department of Transportation.

The Contractor shall perform a growth curve at the beginning of placement of each type of mix and each lift. The growth curve for each type of mix and each lift shall be performed within the first 200 tons (180 metric tons). If an adjustment is made to the specific mix design, the Engineer reserves the right to request an additional growth curve and supporting tests at the Contractor's expense.

Compaction of the growth curve shall commence immediately after the course is placed and at a temperature of not less than 280 °F (140 °C). The growth curve, consisting of a plot of lb/cu ft (kg/cu m) vs. number of passes with the project breakdown roller, shall be developed. Roller speed during the growth curve testing shall be the same as the normal paving operation. This curve shall be established by use of a nuclear gauge. Tests shall be taken after each pass until the highest lb/cu ft (kg/cu m) is obtained. This value shall be the target density provided the HMA Gyratory air voids are within acceptable limits. If the HMA Gyratory air voids are not within the specified limits, corrective action shall be taken, and a new target density shall be established.

A new growth curve is required if the breakdown roller used on the growth curve is replaced with a new roller during production. The target density shall apply only to the specific gauge used. If additional gauges are to be used to determine density specification compliance, the Contractor shall establish a unique minimum allowable target density from the growth curve location for each gauge.

At least one core sample per day shall be taken at a location specified by the Engineer. Core densities will be determined using the Illinois-Modified AASHTO T 166 or T 275 procedure by the Department. The core density shall be according to Articles 1030.05(d)(4) and (d)(7). The QA Manager is responsible for assuring and documenting that the determined number of roller passes has been accomplished. The Engineer reserves the right to take core samples at any time to verify density from the nuclear gauge,

All lifts and confined longitudinal joint edges shall be compacted to an average nuclear gauge density of not less than 95 percent nor greater than 102 percent of the target density obtained on the growth curve. Unconfined longitudinal joint edges shall be compacted to an average nuclear gauge density of not less than 93 percent nor greater than 102 percent of the target density obtained on the growth curve. The average nuclear gauge density shall be based on tests representing one day's production.

Quality Control density tests shall be performed at randomly selected locations within 1/2 mile (800 m) intervals per lift per lane. In no case shall more than one half day's production be completed without density testing being performed. Longitudinal joint density testing shall be performed at each random density test location. Longitudinal joint testing shall be located at a distance equal to the lift thickness or a minimum of 2 in. (50 mm) from each pavement edge.

If the Contractor is not controlling the compaction process and is making no effort to take corrective action, the operation shall stop as directed by the Engineer.

DISTRICT 3 SPECIAL PROVISIONS
FOR SPEC BOOK ADOPTED APRIL 1, 2016

ROUTE IL Route 23 & Gurler Road
SECTION 20-00197-00-WR
COUNTY DeKalb

CONTRACT NO. L-17416
RETURN TO.

DIVISION 100 – GENERAL REQUIREMENTS AND COVENANTS

√			REV. COPY ATT.
√	1A	**TITLE SHEET** Include in all contracts.	
√	1B	**STATUS OF UTILITIES TO BE ADJUSTED** When adjustment is anticipated. Consult Project Support Engineer to verify status of adjustments prior to submitting PS&E.	
	1C	**REPAIR AND MAINTENANCE OF HAUL ROADS** Use with Haul Roads Special Provision.	
	1D	**HAUL ROADS** Use when the use of Haul Roads is indicated through coordination with local agencies.	
	1F	**INCENTIVE PAYMENT PLAN NO. 1** This special is to be used on contracts with an approved incentive payment plan where all work is to be completed by a specific date. (See BDE Manual Section 66-2.04.)	
	1G	**INCENTIVE PAYMENT PLAN NO. 2** This special is to be used on contracts with an approved incentive payment plan where the roadway is to be open to traffic by a specific date. (See BDE Manual Section 66-2.04.)	
	1H	**WETLAND AREAS** Include in all projects with wetlands. Plans must show temporary fence and perimeter erosion barrier locations.	
	1I	**MAINTENANCE (CORPS OF ENGINEERS NWP # 3)** This is an example and the final permit might look different. The Unit Chief should obtain the proper special provision from the Bridge and Hydraulic Unit. Always include drawings in the plans as described in designer notes.	
	1J	**TEMPORARY CONSTRUCTION / WATERWAY PERMITS (CORPS OF ENGINEERS)** This is an example and the final permit might look different. The Unit Chief should obtain the proper special provision from the Bridge and Hydraulic Unit. Always include drawings in the plans as described in designer notes.	
	1K	**TEMPORARY CONSTRUCTION / WATERWAY PERMITS (IDNR)** This is just an example and the final permit might look different. The Unit Chief should obtain the proper special provision from the Bridge and Hydraulic Unit.	
	1L	**COMPLETION DATE** Consider on MCHD projects or electrical maintenance contracts.	
	1P	**COMPLETION DATE PLUS WORKING DAYS** Consider on interstate, urban and other time sensitive projects.	
	1Q	**ROAD CLOSURE REQUIREMENTS AND COMPLETION DATE** Use when closing the road with Completion Date plus Working Days.	

DIVISION 200 – EARTHWORK, LANDSCAPING, AND EROSION CONTROL

	2A	**EXCAVATING AND GRADING EXISTING SHOULDER** To be used on projects lacking environmental clearance, where removal of excavated material from the jobsite is prohibited.	
	2B	**BORROW AND FURNISHED EXCAVATION** To be used when requested by Bureau of Project Implementation.	
	2C	**FURNISHED EXCAVATION** To be used on all projects involving earthwork compaction and truck count measurements.	
	2D	**EMBANKMENT** To be included on all projects involving earthwork compaction when measurement will be other than truck count.	

	2E	**EXPLORATION TRENCH, SPECIAL** To be used on projects containing the pay item Exploration Trench, Special.	
	2F	**MULCH METHOD 2** To be used on all contracts with mulch.	
	2H	**ROCK FILL** For replacement of unsuitable materials under box culverts, use Pay Item Z0054400 Rock Fill	

DIVISION 300 – SUBGRADES, SUBBASES, AND BASE COURSES

√	3A	**AGGREGATE SUBGRADE IMPROVEMENT (DISTRICT 3)** Do not use the BDE special provision, this one replaces it. Must obtain prior approval from Materials if using a thickness less than 12" or greater than 24". Must include BDE Special Provision for Reclaimed Asphalt Pavement (RAP) and Reclaimed Asphalt Pavement (RAS). Underdrains are required when using this pay item and are paid for separately. Pay for Geotextile Fabric for Ground Stabilization as a separate pay item if used	

DIVISION 400 – SURFACE COURSES, PAVEMENTS, REHABILITATION, AND SHOULDERS

√	4A	**AGGREGATE SURFACE COURSE, TYPE B** Use in contracts with this pay item.	
	4B	**PAVEMENT PATCHING** Include in all contracts with Class A or Class B patching.	
	4C	**GROWTH CURVE** Use when requested by the Bureau of Materials.	
	4F	**SURFACE COURSE PAVING SEQUENCE** This special provision is to be included on contracts with two lane two-way traffic and a proposed HMA overlay greater than four miles in length.	
	4G	**VIBRATORY ROLLER RESTRICTION** Place into all HMA contracts (except PFP) where resurfacing locations include bridge decks and urban areas that may include aging infrastructure under the roadway where vibrations could cause damage.	
	4H	**PORTLAND CEMENT CONCRETE PAVING REQUIREMENTS** To be used on small paving projects where there is insufficient room for a complete paving train.	
	4J	**CROSSING STRUCTURES WITH MATERIAL TRANSFER DEVICE** Include on all projects using a Material Transfer Device that have a structure within the project limits. The Designer shall coordinate the analysis with the Bureau of Bridges and Structures and list the Structure Numbers.	
	4K	**AGGREGATE SHOULDER TYPE B** Include on widening and/or resurfacing contracts where aggregate shoulders 6 in. (150 mm) or thicker are to be constructed.	
	4L	**APPROACH SLAB REPAIR** To be used on projects with approach slab repair.	
	4N	**HOT-MIX ASPHALT PAVEMENT PATCHING (PARTIAL DEPTH)** Designer must fill in the proposed removal depth and the binder course N number.	
	4O	**RUMBLE STRIP AT INTERSECTIONS** Include CADD Detail 440-3 for Rumble Strip in the plans.	
	4P	**RAISED JOINT REMOVAL** To be used on all contracts with Raised Joint Removal.	

DIVISION 500 - STRUCTURES

	5A	**BRIDGE DECK CONCRETE SEALER** This special provision was developed by the Bridge Office in Springfield to establish a pay item used to track bridge deck sealing. It should be inserted into all contracts that require sealing of the entire bridge deck.	

	5C	**STORM SEWER, RUBBER GASKET** This item is included to satisfy EPA requirements for horizontal and vertical separation of storm sewer and water mains or water service lines outlined in Section 41 of the Standard Specifications for Water and Sewer Main Construction in Illinois. Note: Placement of storm sewer above water main with less than 18" vertical separation is NOT ALLOWED. This type of joint is required for at least 10 ft (3 m) on each side of the crossing; however, pipe material is to be changed only at catch basins, inlets or manholes. Storm Sewer, Rubber Gasket, is a 550 or M550 Code Number.	
	5D	**STORM SEWER (WATER MAIN REQUIREMENTS)** This item is included to satisfy EPA requirements for horizontal and vertical separation of storm sewer and water mains. Pipe material is to be changed only at catch basins, inlets, or manholes. Review Standard Specifications for Water and Sewer Main Construction in Illinois to determine requirements based on existing and proposed utilities. See Drawings No. 19 through No. 24.	
	5E	**STORM SEWER OR CULVERT TO BE FILLED** To be used when abandoning storm sewers or culverts.	
	5F	**BRIDGE DECK LATEX OR MICROSILICA CONCRETE OVERLAY, CUT OFF DATE** This work must also include a completion date no later than November 15 or a traffic control special provision requiring the Contractor to schedule his operations so that all traffic lanes are open from December 1 to March 1. This is per a request from Project Implementation to eliminate lane closures/reductions over winter months.	

DIVISION 600 – INCIDENTAL CONSTRUCTION

	6A	**PERMANENT SURVEY MARKERS** To be used on contracts containing Permanent Survey Markers.	
	6F	**CELLULAR PHONES** Only to be used on large projects at the direction of the Bureau of Project Implementation. An Engineer's Field Office, Type A must also be provided on the Contract.	
	6G	**FRAMES AND LIDS TO BE ADJUSTED (SPECIAL) and WATER VALVES TO BE ADJUSTED, SPECIAL** To be used on all multi-lift resurfacing projects where manholes and/or water valves exist.	
	6H	**SHOULDER STABILIZATION AT GUARDRAIL** Use whenever shoulder stabilization of guardrail is specified.	

DIVISION 700 – TRAFFIC CONTROL

	7B	**WIDTH RESTRICTION SIGN** Include in all projects with width restriction signing.	
	7C	**VEHICLE PARKING** Use on interstate projects.	
	7E	**TEMPORARY BRIDGE TRAFFIC SIGNALS** Contact the Traffic Signal Section of Operations if signals have more than three movements to determine if a chart showing order of signals will be required.	
	7F	**KEEPING ROADS OPEN TO TRAFFIC** 1. To be used on interstates and high volume multi-lane highways. 2. Revise the times of day and work items listed as needed regarding lane closures.	
	7G	**CHANGEABLE MESSAGE SIGN** To be used on interstate and high volume multi-lane highways.	
	7H	**UNEVEN LANES** To be used on applicable interstate and high speed multi-lane highways.	
	7I	**TRAFFIC CONTROL SURVEILLANCE** Use on projects where Traffic Control Surveillance is required.	

	7J	**TRAFFIC CONTROL IN THE VICINTY OF A RAILROAD GRADE CROSSING** Use on all projects with a grade crossing within the job limits. See the Project Support Unit for guidance when a railroad is located near the project limits or crosses a side road near the mainline.	
√	7L	**PLASTIC DRUMS** To be used on all interstate projects.	
	7M	**DIRECTION INDICATOR BARRICADES** Only use when direction indicator barricades are specified.	
	7Q	**ALTERNATE ROUTE SIGNING** To be used on interstates and high volume multi-lane highways when requested by Construction.	
√	7R	**MAXIMUM DROP-OFFS BETWEEN ADJACENT LANES** To be used on all resurfacing projects.	
√	7S	**TEMPORARY INFORMATION SIGNING** Use with CADD details 720-8, 720-9, 720-10 or 720-11 in the plans.	

DIVISION 700 – PAVEMENT MARKING

	7AB	**LINEAR DELINEATOR PANELS, 6 INCH** Consider use on bridge parapet walls, qualifying rails, etc.	
	7AE	**PAINT PAVEMENT MARKING – TWO APPLICATIONS** Use on all contracts with Paint Pavement Marking.	

DIVISION 800 - ELECTRICAL

	8A	**LOOP DETECTOR TESTING** Use on all contracts with Detector Loops.	
	8B	**SERVICE INSTALLATION (of the type specified)** Use on all contracts with Service Installation.	
	8E	**FULL ACTUATED CONTROLLER AND TYPE IV CABINET, SPECIAL** Use on all contracts with Full Actuated Controller and Type IV Cabinet, Special.	
	8G	**OPTIMIZE TRAFFIC SIGNAL SYSTEM** Use on all contracts with Optimize Traffic Signal System.	
	8H	**FIBER OPTIC CABLE IN CONDUIT** Use on all contracts with Fiber Optic Cable in Conduit.	
	8I	**RE-OPTIMIZE TRAFFIC SIGNAL SYSTEM** Use on all contracts with Re-optimize Traffic Signal System.	
	8J	**RESTORATION OF WORK AREA** This special provision should only be included on contracts where no other earthwork or seeding is included on the project.	
	8L	**ELECTRICAL SERVICE INSTALLATION – TRAFFIC SIGNALS** To be used in Urban areas; consult with traffic signal section.	

DIVISION 1000 - MATERIALS

Revised 7-31-20

STATE OF ILLINOIS

SPECIAL PROVISIONS

The following Special Provisions supplement the "Standard Specifications for Road and Bridge Construction, Adopted April 1, 2016", the latest edition of the "Manual on Uniform Traffic Control Devices for Streets and Highways", and the "Manual of Test Procedures for Materials" in effect on the date of invitation for bids, and the "Supplemental Specifications and Recurring Special Provisions" indicated on the Check Sheet included herein, which apply to and govern the construction of IL Route 23, Section 20-00197-00-WR, in DeKalb County, and in case of conflict with any part, or parts, of said Specifications, the said Special Provisions shall take precedence and shall govern.

Job No. C-93-105-21

LOCATION OF PROJECT

The project is located at the intersection of IL Route 23 and Gurler Road in DeKalb, Illinois.

DESCRIPTION OF PROJECT

The purpose of this project is to add a northbound and westbound designated left and designated right turn lane, a southbound designated left turn lane, and widen the intersection to accommodate WB-67 turning movements. In addition to the pavement widening, drainage facilities, driveway reconstruction, a detention facility, and erosion control measures are also proposed.

1B

STATUS OF UTILITIES TO BE ADJUSTED:
(Effective January 1, 2007; Revised January 24, 2011)

Name & Address of Utility	Type	Location	Estimated Date Relocation Complete
Frontier Communications 112 West Elm Street Sycamore, IL 60178	Telephone	All approaches of intersection	

The above represents the best information of the Department and is only included for the convenience of the bidder. The applicable provisions of Section 102 and Articles 105.07, 107.20, 107.37, 107.38, 107.39, 107.40, and 108.02 of the Standard Specifications for Road and Bridge Construction shall apply.

The estimated utility relocation dates should be part of the progress schedule submitted by the Contractor.

3A

AGGREGATE SUBGRADE IMPROVEMENT (District 3)
(Effective April 1, 2012; Revised July 8, 2019)

Add the following Section to the Standard Specifications:

"SECTION 303. AGGREGATE SUBGRADE IMPROVEMENT

303.01 Description. This work shall consist of constructing an aggregate subgrade improvement.

303.02 Materials. Materials shall be according to the following.

Item	Article/Section
(a) Coarse Aggregate	1004.07
(b) Reclaimed Asphalt Pavement (RAP) (Notes 1, 2, and 3)	1031

Note 1. Crushed RAP, from either full depth or single lift removal, may be mechanically blended with aggregate gradations CS 01 or CS 02 but shall not exceed 40 percent of the total product. The top size of the RAP shall be less than 4 in. (100 mm) and well graded.

Note 2. RAP having 100 percent passing the 1 1/2 in. (37.5 mm) sieve and being well graded, may be used as capping aggregate in the top 3 in. (75 mm) when aggregate gradations CS 01 or CS 02 are used in lower lifts. The RAP shall not be gap graded, single sized, or have a maximum size of less than 3/4 in. (19 mm).

Note 3. The RAP used for aggregate subgrade improvement shall be according to the current Bureau of Materials and Physical Research Policy Memorandum, "Reclaimed Asphalt Pavement (RAP) for Aggregate Applications".

303.03 Equipment. The vibratory machine shall be according to Article 1101.01 or as approved by the Engineer.

303.04 Soil Preparation. The stability of the soil shall be according to the Department's Subgrade Stability Manual for the aggregate thickness specified.

303.05 Placing Aggregate. The maximum nominal lift thickness of aggregate gradations CS 01 and CS 02 shall be 24 in. (600 mm).

303.06 Capping Aggregate. The top surface of the aggregate subgrade shall consist of a minimum 3 inches (75 mm) of aggregate gradations CA 06 or CA 10.

303.07 Compaction. All aggregate lifts shall be compacted to the satisfaction of the Engineer. If the moisture content of the material is such that compaction cannot be obtained, sufficient water shall be added so that satisfactory compaction can be obtained.

303.08 Finishing and Maintenance of Aggregate Subgrade Improvement. The aggregate subgrade improvement shall be finished to the lines, grades, and cross

sections shown on the plans, or as directed by the Engineer. The aggregate subgrade improvement shall be maintained in a smooth and compacted condition.

303.09 Method of Measurement. This work will be measured for payment according to Article 311.08.

303.10 Basis of Payment. This work will be paid for at the contract unit price per square yard (square meter) for AGGREGATE SUBGRADE IMPROVEMENT, of the thickness specified."

Add the following to Section 1004 of the Standard Specifications:

"**1004.07 Coarse Aggregate for Aggregate Subgrade Improvement.** The aggregate shall be according to Article 1004.01 and the following.

(a) Description. The coarse aggregate shall be crushed gravel, crushed stone, or crushed concrete.

(b) Quality. The coarse aggregate shall consist of sound durable particles reasonably free of deleterious materials.

(c) Gradation.

(1) The coarse aggregate gradation for total subgrade thickness less than or equal to 12 inches (300 mm) shall be CS 02.

The coarse aggregate gradation for total subgrade thickness more than 12 inches (300 mm) shall be CS 01 or CS 02.

	COARSE AGGREGATE SUBGRADE GRADATIONS				
Grad No.	Sieve Size and Percent Passing				
	8"	6"	4"	2"	#4
CS 01	100	97 ± 3	90 ± 10	45 ± 25	20 ± 20
CS 02		100	80 ± 10	25 ± 15	

	COARSE AGGREGATE SUBGRADE GRADATIONS (Metric)				
Grad No.	Sieve Size and Percent Passing				
	200 mm	150 mm	100 mm	50 mm	4.75 mm
CS 01	100	97 ± 3	90 ± 10	45 ± 25	20 ± 20
CS 02		100	80 ± 10	25 ± 15	

(2) The 3 inch (75 mm) capping aggregate shall be gradation CA 6 or CA 10."

4A

AGGREGATE SURFACE COURSE, TYPE B
(Effective January 1, 2007)

Add the following to Article 402.07 of the Standard Specifications:

The top layer shall be given a final rolling with a roller meeting the requirements of Article 1101.01.

7L

PLASTIC DRUMS

(Effective August 15, 2005; Revised April 27, 2018)

Plastic drums according to Standard 701901 shall be used in lieu of cones, Type I and Type II barricades, and vertical barricades throughout lane closures.

MAXIMUM DROP-OFFS BETWEEN ADJACENT LANES

(Effective December 14, 2009, Revised July 31, 2020)

When the Contractor's operations cause a difference in elevation greater than 1.5 in. (38 mm) for a vertical milled face, or 2 in (50mm) for a lift of HMA resurfacing between adjacent lanes, the lane shall remain closed. The Contractor shall adjust his milling and paving operations so that all traffic lanes are open at the end of each work day.

To meet the above requirement, the Contractor shall

Place the binder lift immediately following the milling operation before opening the lane to traffic or

Place a temporary wedge after the milling operations (minimum 1V:3H slope) or

Mill a sloped wedge between lanes (minimum 1V:3H slope).

When the difference in elevation between adjacent open traffic lanes is greater than 1 in. (25 mm) and less than or equal to 1.5 in. (38 mm) for a vertical milled face or 2 in (50mm) for a HMA lift, "UNEVEN LANES" signs (W8-11(FO)) shall be erected at 1 mile (1.6 km) intervals.

The above requirements were developed based on IDOT Safety Engineering Policy Memorandum 4-15. Any changes to the proposed lift thicknesses, milling depths or sequence of operations that change drop-offs at the centerline or edge of pavement must follow this policy and be approved by the Engineer.

This work will not be paid for separately, but shall be included in the cost of the applicable traffic control items.

7S

TEMPORARY INFORMATION SIGNING

(Effective: September 24, 2013, Revised July 31, 2020)

Description. This work shall consist of the furnishing, installation, maintenance, and removal of temporary information signs.

Materials. Materials shall be according to the applicable portions of Section 701 of the Standard Specifications and as shown on the plans.

Construction Requirements. The temporary information signs shall be in place at least one week prior to the beginning of construction activities that impact traffic flow and shall remain in place until the completion of the project. If all lanes are open for an extended period of time during the project the Contractor shall cover the signs until lane closures resume. If the project is shut down for the winter the signs shall read "Road Work Resumes Spring XXXX".

Signs shall be installed according to the requirements of Section 701.

Method of Measurement: This work will be measured for payment in square feet in place. The auxiliary sign panel will not be measured for payment.

Basis of Payment. This work will be paid for at the contract unit price per square foot for TEMPORARY INFORMATION SIGNING.

Project Specific Index of Special Provisions

HOT-MIX ASPHALT SURFACE COURSE, IL-9.5, MIX "D", N70 (WITH FORTA FIBERS) 6-2
GRATING FOR CONCRETE FLARED END SECTION 12" 6-2
FIRE HYDRANTS TO BE ADJUSTED 6-2
REMOVE EXISTING FLARED END SECTION 6-3
WASHOUT BASIN 6-3
RELOCATE EXISTING MAILBOX 6-4
TEMPORARY AGGREGATE WEDGE 6-4
CONCRETE COLLARS 6-5
CONCRETE HEADWALL (SPECIAL) 6-5
FENCE REMOVAL AND REINSTALLATION 6-5
GROOVED PAVEMENT MARKINGS 6-6
AGGREGATE SHOULDER REMOVAL 6-6
TRAFFIC CONTROL AND PROTECTION, (SPECIAL) 6-7
DRYWELL 6-8
TEMPORARY SIGNING 6-8
HDPE N-12 PIPE 6-9
REESTABLISH EXISTING BENCHMARK 6-9
FENCE POST REMOVAL 6-10
EXCAVATION REGULATED SUBSTANCES COMMITMENT 6-10

HOT-MIX ASPHALT SURFACE COURSE, IL-9.5, MIX "D", N70 (WITH FORTA FIBERS)

This work shall be done in accordance with applicable portions of section 406 of the Standard Specifications.

Description: This work shall consist of furnishing and laying hot-mix asphalt surface course IL-9.5, mix "D", N70 with the addition of Forta Fibers. Forta Fibers shall be included in hot-mix asphalt mixes as directed by the manufacturer.

Method of Measurement: This work will be measured for payment as TON of asphalt with Forta-Fibers.

Basis of Payment: This work will be paid for at the contract unit price as TON for HOT-MIX ASPHALT SURFACE COURSE, IL-9.5, MIX "D", N70 (WITH FORTA FIBERS), which price shall include all labor, equipment, and materials necessary to complete the work. No additional compensation will be allowed.

GRATING FOR CONCRETE FLARED END SECTION 12"

This work shall be done in accordance with applicable portions of section 542 the Standard Specifications.

Description: This work shall consist of furnishing and installing grating for 12" flared end sections.

Method of Measurement: This work will be measured for payment as EACH grate.

Basis of Payment: This work will be paid for at the contract unit price as EACH for GRATING FOR FLARED END SECTION 12", which price shall include all labor, equipment, and materials necessary to complete the work. No additional compensation will be allowed.

FIRE HYDRANTS TO BE ADJUSTED

This work shall be done in accordance with applicable portions of section 561 and 564 of the Standard Specifications and the Standard Specifications for Water and Sewer Main Construction in Illinois.

Description: This item consists of vertical adjustment of fire hydrants where called for on the plans or as directed by the Engineer.

General: Where called for on the plans or as directed by the Engineer, fire hydrants with auxiliary valves shall be vertically adjusted to meet the proposed final grade. Any fire hydrant damaged by the Contractor shall be repaired at his/her own expense. The work shall be performed in a manner approved, written or orally, by the Engineer of the municipality, or the Water District.

Method of Measurement: This work will be measured for payment as EACH hydrant to be

vertically adjusted.

Basis of Payment: This work will be paid for at the contract unit price EACH for FIRE HYDRANTS TO BE ADJUSTED, which price shall include all labor, equipment, and materials necessary to complete the work. No additional compensation will be allowed.

REMOVE EXISTING FLARED END SECTION

This work shall be done in accordance with applicable portions of the Standard Specifications.

Description: This item shall include the careful removal and satisfactory disposal of the existing flared end section as indicated in the plans or as directed by the Engineer. All usable material shall be disposed of by the Contractor at his expense. Any pipe damaged by the Contractor during the removal shall be replaced by him at his own expense.

Method of Measurement: This work will be measured for payment as EACH for existing flared end sections to be removed.

Basis of Payment: This work will be paid for at the contract unit price EACH for REMOVE EXISTING FLARED END SECTION, which price shall include all labor, equipment, and materials necessary to complete the work. No additional compensation will be allowed.

WASHOUT BASIN

This work shall be done in accordance with applicable portions of the Standard Specifications.

Description: This work consists of installation, maintenance and subsequent removal and disposal of a concrete washout basin and shall be done in accordance with Sections 280 of the Standard Specifications and as shown on the plans. The washout basin shall be removed after concrete items have been installed.

A concrete washout basin shall be supplied as necessary to accommodate concrete delivery operations. No more than one (1) washout basin will be permitted without approval from the Engineer. The washout basin location(s) must be approved by the Engineer prior to installation.

Measurement of Measurement: This work will be measured for payment as LUMP SUM for washout basins.

Basis of Payment: This work will be paid for at the contract LUMP SUM price for WASHOUT BASIN, which price shall include all labor, equipment, and materials necessary to complete the work. No additional compensation will be allowed.

RELOCATE EXISTING MAILBOX

This work shall be in accordance with the applicable portions of Article 107.20 of the Standard Specifications, as shown in the plans, or as directed by the Engineer and as modified herein.

Description: This work shall consist of the removal, temporary relocation, and permanent relocation of the existing mailbox at the locations shown and as detailed in the plans. The existing mailbox shall remain accessible at all times during construction. Permanent locations of mailboxes impacted by construction activities be coordinated with the property owner and local postmaster. Multiple mailboxes to be installed at one location shall be mounted on individual posts. Installations shall meet the requirements of the United States Postal Service and shall be approved by the Engineer prior installation.

Damaged mailboxes shall be replaced by the contractor at the contractor's expense. The replacement mailbox style and materials shall be substantially similar to the existing mailbox and is subject to approval by the engineer and applicable landowner.

Method of Measurement: This work will be measured for payment as EACH mailbox to be relocated.

Basis of Payment: This work will be paid for at the contract unit price EACH for RELOCATE EXISTING MAILBOX, which price shall include all labor, equipment, and materials necessary to complete the work. No additional compensation will be allowed.

TEMPORARY AGGREGATE WEDGE

This work shall be constructed in accordance with Section 350 of the Standard Specifications.

Description: This work consists of the placement of Type B Aggregate Base Course Wedge behind the temporary concrete barrier wall at locations where the temporary concrete barrier wall is placed at the edge of a vertical drop off and as shown on the Plans. When the temporary concrete barrier wall is removed, the temporary aggregate base course wedge shall be removed and the underlying aggregate subgrade improvement shall be regraded and recompacted to final elevations.

Method of Measurement: This work will be measured for payment per TON for TEMPORARY AGGREGATE WEDGE.

Basis of Payment: This work will be paid for at the contract unit price per TON for TEMPORARY AGGREGATE WEDGE, which price shall include all labor, equipment, and materials necessary to complete the work. No additional compensation will be allowed.

CONCRETE COLLARS

This work shall be done in accordance with applicable portions of the Standard Specifications.

Description: This work consists of the construction of a concrete collar at the locations shown and as detailed in the plans.

Method of Measurement: This work will be measured for payment as EACH for concrete collars.

Basis of Payment: This work will be paid for at the contract unit price per EACH for CONCRETE COLLAR, which price shall include all labor, equipment, and materials necessary to complete the work. No additional compensation will be allowed.

CONCRETE HEADWALL (SPECIAL)

This work shall be done in accordance with applicable portions of the Standard Specifications.

Description: This work consists of the construction of a dual-culvert concrete headwall at the locations shown and as detailed in the plans.

Method of Measurement: This work will be measured for payment as EACH for modified concrete headwalls.

Basis of Payment: This work will be paid for at the contract unit price per EACH for CONCRETE HEADWALL (SPECIAL), which price shall include all labor, equipment, and materials necessary to complete the work. No additional compensation will be allowed.

FENCE REMOVAL AND REINSTALLATION

This work shall be done in accordance with applicable portions of Section 664 of the Standard Specifications.

Description: This work shall consist of the removal, storage, and reinstallation of the existing fence and fence posts at the locations shown and as detailed in the plans. The fence and fence posts shall be removed before construction activities in the same quadrant of the intersection begin. The limits of fence removal shall be as designated in the plans.

Portions of the existing fence and fence posts damaged during removal shall be replaced by the contractor at the contractor's expense. Fence replacement style and materials shall be substantially similar to the existing fence and is subject to approval by the engineer and applicable landowner. The fence and fence posts shall be safely stored until it can be reinstalled after the improvements are complete. The location of storage will be left up to the contractor and the contractor is responsible for storage and maintaining the quality of the existing fence.

The proposed location of the reinstallation of the fence and fence posts shall match the existing locations.

Method of Measurement: Fence and fence posts to be removed and reinstalled will be measured for payment in FEET, along the top of the fence from center to center of posts.

Basis of Payment: This work will be paid at the contract unit price per FOOT for FENCE REMOVAL AND REINSTALLATION, which price shall include all labor, equipment, and materials necessary to complete the work. No additional compensation will be allowed.

GROOVED PAVEMENT MARKINGS

This work shall be done in accordance with applicable portions of section 780 of the Standard Specifications.

Description: This work shall consist of furnishing and applying grooved pavement markings.

Method of Measurement: This work shall be measured for payment per FEET of grooved pavement markings.

Basis of Payment: This work shall be paid at the contract unit price per FOOT for GROOVED PAVEMENT MARKINGS of specified width, which price shall include all labor, material, and equipment necessary to complete the work. No additional compensation will be allowed.

AGGREGATE SHOULDER REMOVAL

This work shall be done in accordance with applicable portions of Section 202 of the Standard Specifications.

Description: The work includes excavation, removal, and disposal of the existing aggregate shoulder for the construction of a paved asphalt shoulder at the locations shown and as detailed in the plans. The aggregate shoulder shall be removed to a depth sufficient to accommodate the proposed pavement section.

Method of Measurement: This work will be measured for payment per CUBIC YARD of aggregate shoulder to be removed.

Basis of Payment: This work will be paid for at the contract unit price per CUBIC YARD for AGGREGATE SHOULDER REMOVAL, which price shall include all the removal and disposal of excess material required, all labor, material, and equipment necessary to complete the work. No additional compensation will be allowed.

TRAFFIC CONTROL AND PROTECTION, (SPECIAL)

This work shall be in accordance with the applicable sections of the Standard Specifications.

Description: This work shall include furnishing, installing, maintaining, replacing, relocating and removing all traffic control devices used for the purpose of regulating, warning or directing traffic during the construction or maintenance of improvements outlined in the plans.

All traffic control devices used on this project shall conform to the plans, Special Provisions, Traffic Control Standards, "Illinois Supplement to the National Manual on Uniform Traffic Control Devices", and "Manual on Uniform Traffic Control Devices." No modification of these requirements will be allowed without prior written approval of the Engineer. Traffic Control Devices include signs and their supports, signals, barricades with sand bags, channelizing devices, warning lights, arrow boards, flaggers, or any other device used for the purpose of regulating, detouring, warning or guiding traffic through or around the construction zone.

Special attention shall be given to advance warning signs during construction operations in order to keep lane assignment consistent with barricade placement at all times. The Contractor shall immediately remove, cover or turn from the view of the motorists all traffic control devices which are inconsistent with detour or lane assignment patterns and conflicting conditions during the transition from one construction stage to another. When the Contractor elects to cover conflicting or inappropriate signing, materials used shall cover the entire sign. The method used for covering the signing shall meet the approval of the Engineer.

The Contractor shall coordinate all traffic control work on this project with adjoining or overlapping projects, including barricade placement necessary to provide a uniform traffic pattern. When directed by the Engineer, the Contractor shall remove all traffic control devices which were furnished, installed and maintained under this contract, and such devices shall remain the property of the Contractor. Lane closures shall only be left in place as long as they are needed. At all other times, traffic control shall be removed unless directed by the Engineer. Failure to restore lanes to full width will result in a traffic control deficiency as specified in Article 105.03.

Method of Measurement: This work will be measured for payment as a LUMP SUM of for special traffic control and protection.

Basis of Payment: This work will be paid for at the contract lump sum price for TRAFFIC CONTROL AND PROTECTION (SPECIAL), which price shall include all labor, material, and equipment necessary to complete the work. Temporary Pavement Markings and Removal, Traffic Control and Protection Standards, Temporary Signing, and Temporary Information Signing will be measured for payment and paid for separately as outlined in the Standard Specifications for Road and Bridge Construction or in these Special Provisions. All other traffic control and protection items shall be considered as included in this price. No additional compensation will be allowed.

DRYWELL

This work shall be done in accordance with applicable portions of Section 602 and 606 of the Standard Specifications.

Description: This work shall consist of furnishing and installing a drywell, including all equipment, labor, and materials for the construction of the drywell in the location and as detailed in the plans.

Construction: Prior to backfilling, the porous sections of the drywell shall be wrapped in extruded HDPE netting with ½" nominal openings. Drywell shall be backfilled with drainage rock, CA-7 in lifts not exceeding 12" in depth and shall be compacted by mechanical means to the satisfaction of the engineer. After setting the drywell, a filter fabric shall be installed in the interior on the bottom of drywell and on the wall of the lower two feet of the interior of the barrel to prevent sedimentation from construction activities. The Contractor shall be responsible for periodic inspection, maintenance, and removal of silt collected on the fabric to the satisfaction of the engineer. All filter fabric shall be removed from the interior of the drywell by the contractor at direction of the Engineer. Frames, grates, and lids will be in accordance with Section 604 of the Standard Specification and will be installed on the drywells as indicated in the plans.

Method of Measurement: This work will be measured for payment as EACH for drywell to be installed.

Basis of Payment: This work will be paid at the contract unit price per EACH for DRYWELL of the specified diameter, which price shall include frames, grates, lids, netting, filter fabric, and drainage rock, CA-7. Price shall also include all labor, material, and equipment necessary to complete the work. No additional compensation will be allowed.

TEMPORARY SIGNING

This work shall be done in accordance with applicable portions of the Standard Specifications.

Description: The Contractor may be required to provide signing in addition to that required by the Traffic Control Standards and Section 701 of the Standard Specifications. When additional signs are required as determined by the Engineer, they shall include furnishing, erecting, maintaining and removing said signs.

Method of Measurement: This work will be measured for payment as EACH for temporary signs.

Basis of Payment: This work will be paid for at the contract unit price EACH for TEMPORARY SIGNING, which price shall include all labor, equipment, and materials necessary to complete the work. Additional flaggers required beyond what is included in Traffic Control Standards shall be paid according to Art. 109.04. No additional compensation will be allowed.

HDPE N-12 PIPE

This work shall be done in accordance with applicable portions of section 550 of the Standard Specifications.

Description: This work shall consist of furnishing and installing HDPE N-12 Storm Pipe.

Method of Measurement: This work will be measured for payment as FEET of pipe, measured from center of structure to center of structure.

Basis of Payment: This work will be paid for at the contract unit price per FOOT of HDPE N-12 PIPE of the specified diameter, which price shall include all labor, equipment, and materials necessary to complete the work. TRENCH BACKFILL will be measured for payment and paid for separately as outlined in the Standard Specifications for Road and Bridge Construction or in these Special Provisions. No additional compensation will be allowed.

REESTABLISH EXISTING BENCHMARK

This work shall be done in accordance with applicable portions of sections 666 and 667 of the Standard Specifications.

Description: This work shall consist of the establishment of a temporary benchmark in place of the existing benchmark to be disturbed by removal of the existing headwall, and reestablishment of a permanent benchmark at the location shown and as detailed in the plans. The temporary benchmark shall be established before construction activities in the same quadrant of the intersection begin.

The proposed location of the reestablished benchmark shall be generally as designated in the plans.

Method of Measurement: This work will be measured for payment as EACH for benchmarks to be reestablished.

Basis of Payment: This work will be paid for at the contract unit price as EACH for REESTABLISH EXISTING BENCHMARK, which price shall include all labor, equipment, and materials necessary to complete the work. No additional compensation will be allowed.

FENCE POST REMOVAL

This work shall be done in accordance with applicable portions of the Standard Specifications.

Description: This work shall consist of the removal and proper disposal of fence posts when there is no adjacent fence.

Method of Measurement: This work will be measured for payment as EACH for fence posts to be removed.

Basis of Payment: This work will be paid for at the contract unit price as EACH for FENCE POST REMOVAL, which price shall include all labor, equipment, and materials necessary to complete the work. No additional compensation will be allowed.

EXCAVATION REGULATED SUBSTANCES COMMITMENT

The contractor shall implement the following general and project-specific environmental commitments for this project to be in compliance with Departmental Policy D&E-11:

General Requirements:

- Exercise due care to determine whether regulated substances may be present on or located adjacent to property under State control;
- Where materials containing regulated substances are located on property under state control, or where such substances are generated as a result of project actions, excavation, management, and disposal of the substances shall conform to current legal and regulatory requirements.
- Tier 1 Residential Soil Remediation Objectives as specified in 35 Illinois Administrative Code [IAC], Part 742, shall be used to determine the extent of remediation efforts for the contaminants of concern.
- Soil and fill materials that are placed on property under State control shall be free of contaminants and protective of human health and the environment; and
- Contractor shall prepare and submit with required attachments, a Regulated Substances Final Construction Report (RSFCR) using Form BDE 2733 within 90 days of completion of work conducted on state right-of-way or roads under state jurisdiction. The RSFCR shall be signed by an Illinois licensed Professional Geologist or Professional Engineer. IDOT will review the document and may provide comments if deemed insufficient, in which case, the contractor shall address all comments to the satisfaction of IDOT. Upon acceptance, an electronic copy in Adobe pdf format shall be submitted to the Central Office Geologic and Waste Assessment Unit via the District's environmental studies unit.
- Form BDE 2733 can be found on the IDOT website at: http://idot.illinois.gov/Assets/uploads/files/IDOT-Forms/BDE/BDE%202733.pdf

Project-Specific Requirements:

- The project is located at the intersection of IL 23 and Gurler Road in DeKalb, IL.

- The proposed work consists of intersection reconstruction, including lane additions, land acquisition and utility work.

The IDOT County Specific Generator (IEPA BOL) Number to be used for this work (in DeKalb County) is 0378995002.

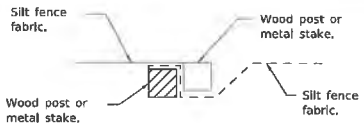

Place end-post (stake) of first silt fence adjacent to end-post (stake) of second silt fence with fabric positioned as swown.

STEP 1

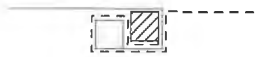

Rotate posts (stakes) together 180° clockwise and drive both posts (stakes) 18 (450) into ground.

STEP 2

ATTACHING TWO SILT FILTER FENCES
(Not applicable for J-hooks)

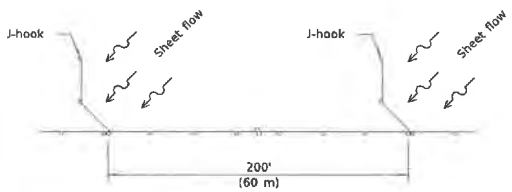

SILT FILTER J-HOOK PLACEMENT

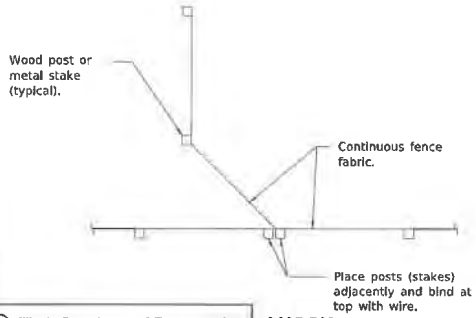

J-HOOK

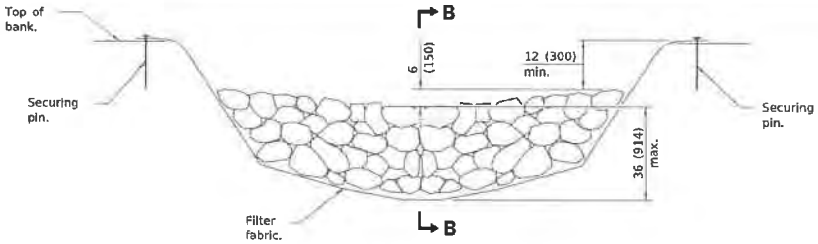

ELEVATION

* When the ditch check is within the clear zone and the road is open to traffic, the traffic approach slope of the aggregate shall be 1:4 (V:H).

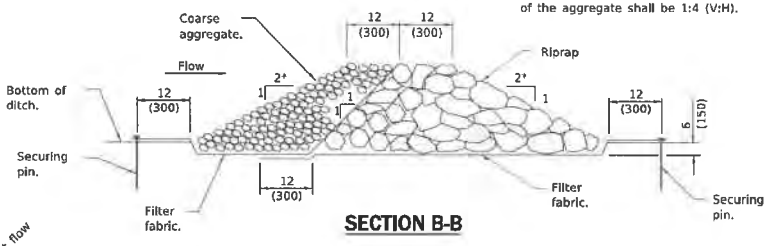

SECTION B-B

AGGREGATE DITCH CHECK

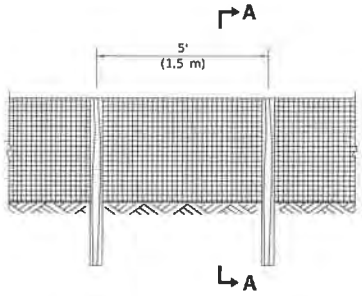

ELEVATION

SILT FILTER FENCE AS A PERIMETER EROSION BARRIER

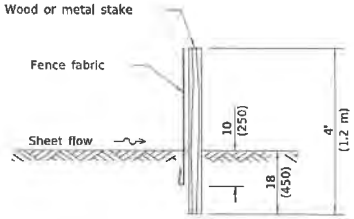

SLICE METHOD

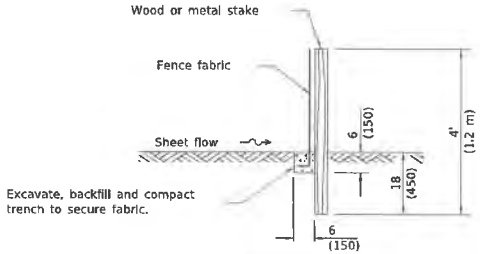

TRENCH METHOD

SECTION A-A

GENERAL NOTES

The installation details and dimensions shown for perimeter erosion barriers shall also apply for inlet and pipe protection.

All dimensions are in inches (millimeters) unless otherwise shown.

Illinois Department of Transportation

PASSED January 1, 2013
ENGINEER OF POLICY AND PROCEDURES
APPROVED January 1 2013
ENGINEER OF DESIGN AND ENVIRONMENT

ISSUED 1-1-97

DATE	REVISIONS
1-1-13	Corrected notation for
	flowline (℄) on SEDIMENT
	BASIN ELEVATION.
1-1-12	Omitted hay/straw perimeter
	barrier. Added SLICE METHOD
	to SECTION A-A.

TEMPORARY EROSION CONTROL SYSTEMS

(Sheet 1 of 2)

STANDARD 280001-07

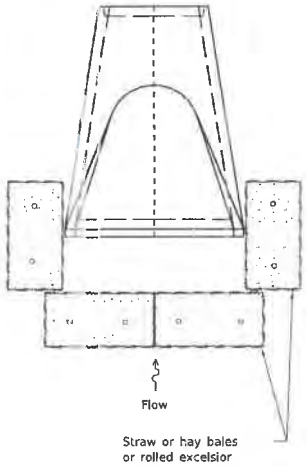

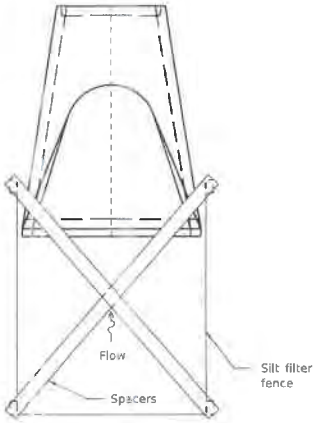

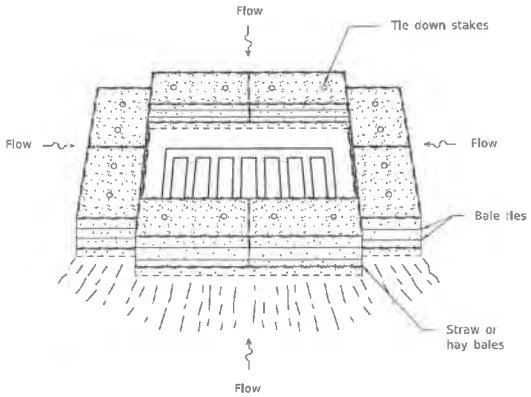

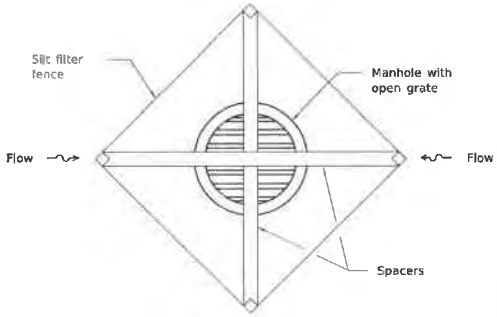

INLET AND PIPE PROTECTION

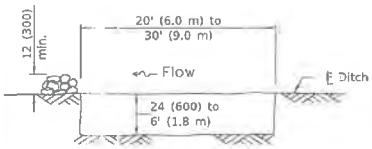

The performance of the basin will improve if put into a series.

ELEVATION

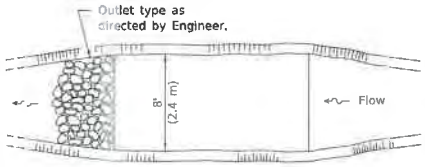

The long dimension should be parallel with the direction of the flow. Accumulated silt shall be removed anytime the basins become 75% filled.

PLAN

SEDIMENT BASIN

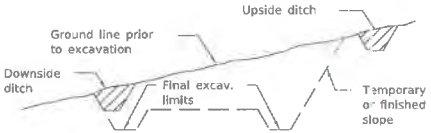

TYPICAL CUT CROSS-SECTION

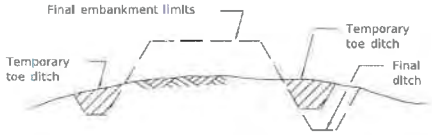

TYPICAL FILL CROSS-SECTION

TEMPORARY DITCHES FOR CUT & FILL SECTIONS

Illinois Department of Transportation

PASSED January 1, 2013
ENGINEER OF POLICY AND PROCEDURES

APPROVED January 1, 2013
ENGINEER OF DESIGN AND ENVIRONMENT

35.00.0 1-1-97

TEMPORARY EROSION CONTROL SYSTEMS

(Sheet 2 of 2)

STANDARD 280001-07

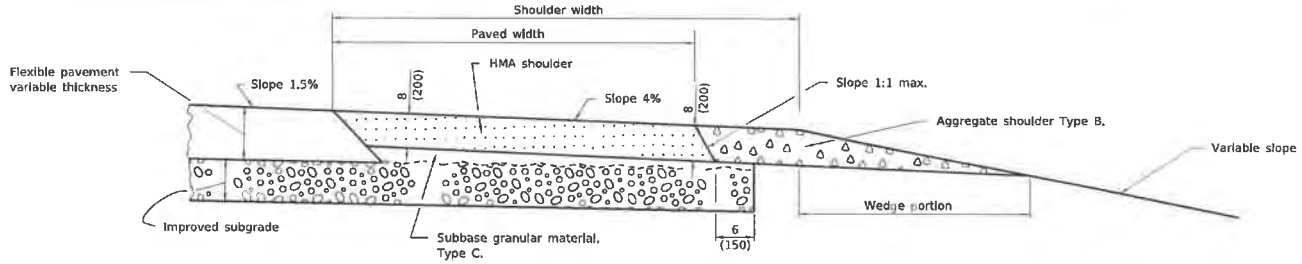

SHOULDER FOR TANGENT PAVEMENT

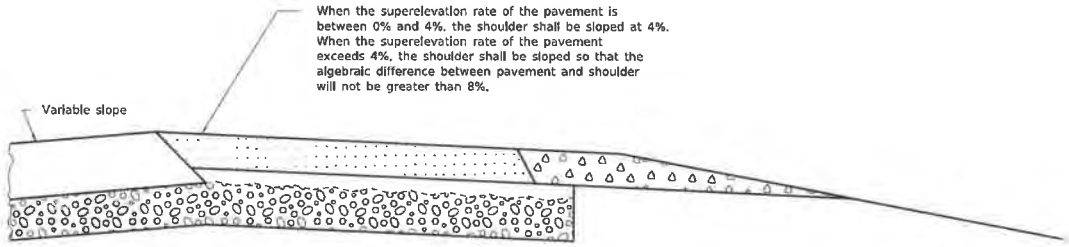

SHOULDER FOR SUPERELEVATED PAVEMENT (OUTSIDE OF CURVE)

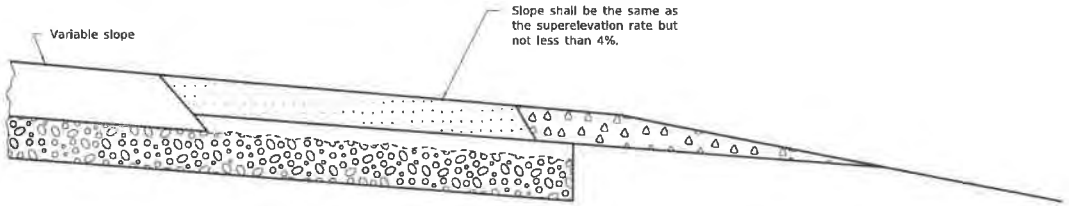

SHOULDER FOR SUPERELEVATED PAVEMENT (INSIDE OF CURVE)

GENERAL NOTES

Except as noted or shown the dimensions and notes specified for the shoulder of tangent pavement are typical for the shoulders of superelevated pavement.

All dimensions are in inches (millimeters) unless otherwise shown.

Illinois Department of Transportation

PASSED January 1, 2008
ENGINEER OF POLICY AND PROCEDURES
APPROVED January 1 2008
ENGINEER OF DESIGN AND ENVIRONMENT

ISSUED 1-1-97

DATE	REVISIONS
1-1-08	Switched units to
	English (metric).
1-1-07	Switched to Hot-Mix
	Asphalt (HMA)
	terminology.

HMA SHOULDER ADJACENT TO FLEXIBLE PAVEMENT

STANDARD 482001-02

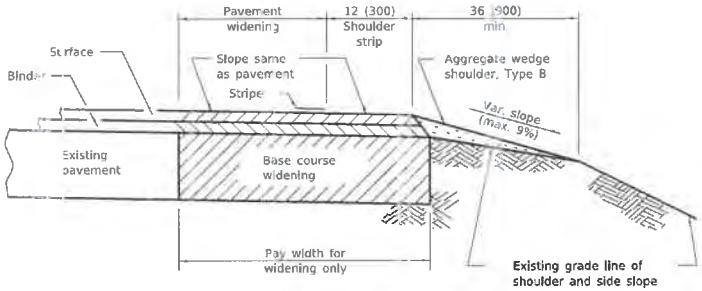

HMA SHOULDER STRIP AND AGGREGATE WEDGE WITH WIDENING

(Cross-section A)

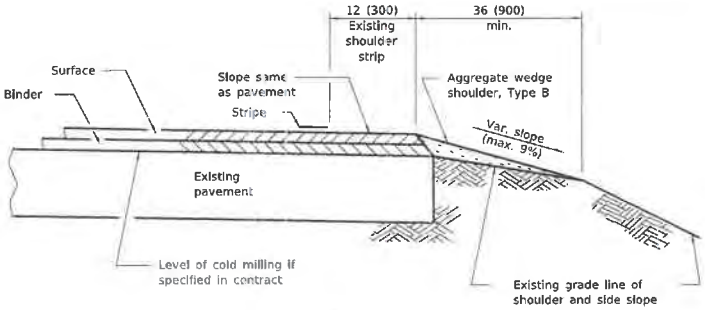

COLD MILLING AND/OR RESURFACING OF EXISTING PAVEMENT WITH SHOULDER STRIPS

(Cross-section C)

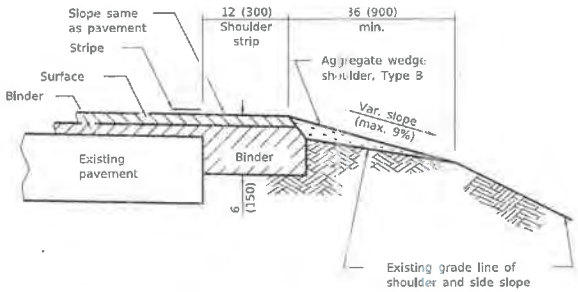

HMA SHOULDER STRIP AND AGGREGATE WEDGE WITH RESURFACING

(Cross-section B)

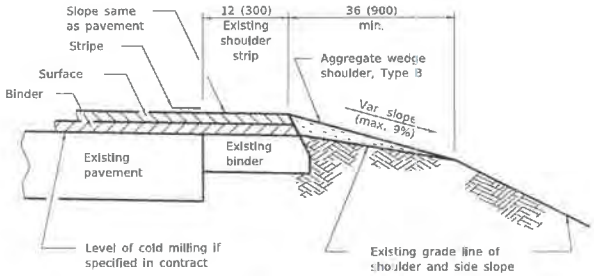

COLD MILLING AND/OR RESURFACING OF EXISTING PAVEMENT WITH SHOULDER STRIPS

(Cross-section D)

All dimensions are in inches (millimeters) unless otherwise shown.

Illinois Department of Transportation

PASSED January 1, 2008
ENGINEER OF POLICY AND PROCEDURES
APPROVED January 1, 2008
ENGINEER OF DESIGN AND ENVIRONMENT

ISSUED 1-1-97

DATE	REVISIONS
1-1-08	Switched units to English (metric).
1-1-07	Switched to Hot-Mix Asphalt (HMA) terminology.

HMA SHLD. STRIPS/SHLDS. WITH RESURFACING OR WIDENING AND RESURFACING PROJECTS

(Sheet 1 of 2)

STANDARD 482011-03

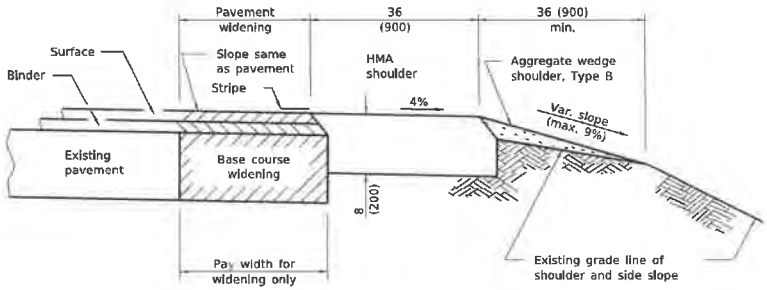

HMA SHOULDER AND AGGREGATE WEDGE WITH WIDENING
(Cross-section E)

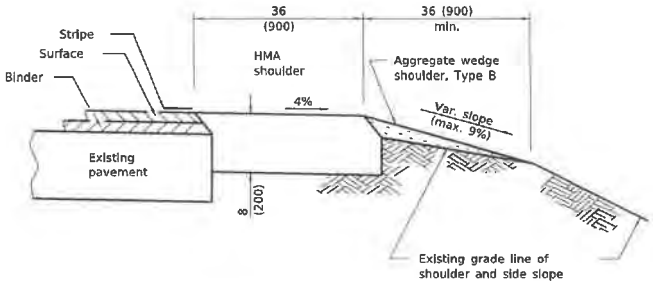

HMA SHOULDER AND AGGREGATE WEDGE WITH RESURFACING
(Cross-section G)

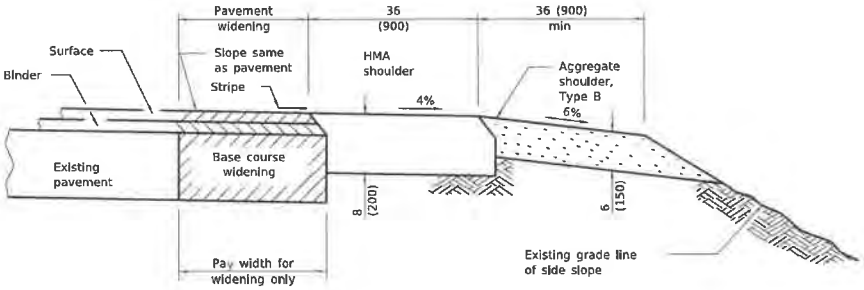

HMA AND AGGREGATE SHOULDERS WITH WIDENING
(Cross-section F)

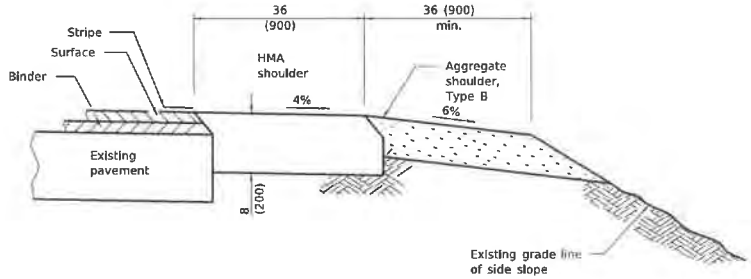

HMA AND AGGREGATE SHOULDERS WITH RESURFACING
(Cross-section H)

Illinois Department of Transportation

PASSED January 1, 2009
ENGINEER OF POLICY AND PROCEDURES
APPROVED January 1 2008
ENGINEER OF DESIGN AND ENVIRONMENT

ISSUED 1-1-97

HMA SHLD. STRIPS/SHLDS. WITH RESURFACING OR WIDENING AND RESURFACING PROJECTS
(Sheet 2 of 2)

STANDARD 482011-03

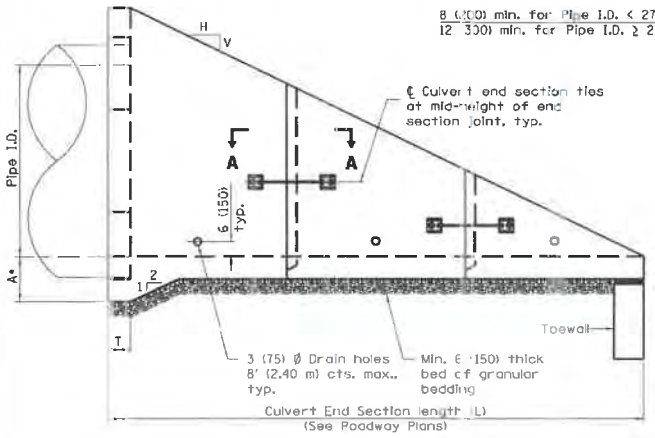

ELEVATION

* This dimension shall be increased by 1½ (38) for CIP field construction. See General Notes.

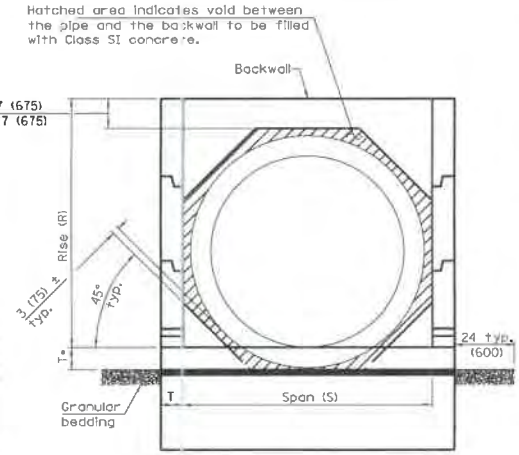

END VIEW

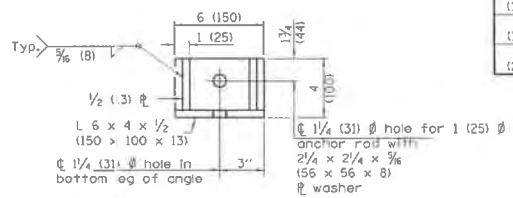

RESTRAINT ANGLE DETAIL

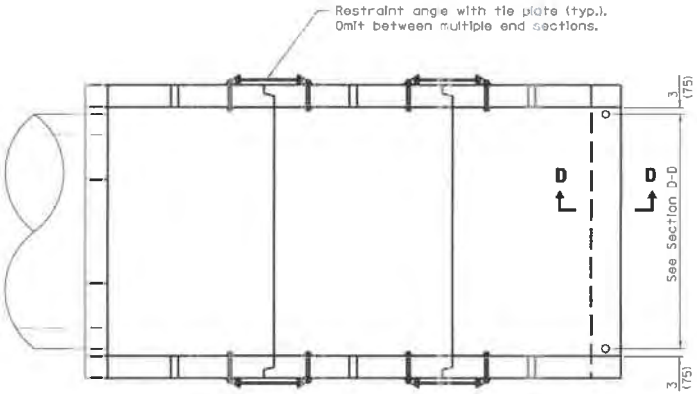

PLAN

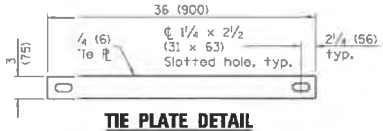

TIE PLATE DETAIL

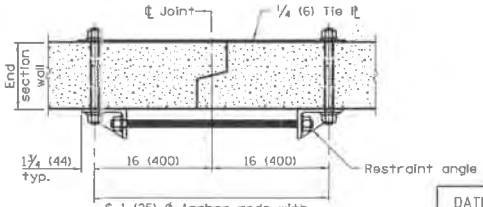

℄ 1 (25) Ø Anchor rods with 2¼ x 2¼ x 5/16 (56 x 56 x 8) ℙ washers installed in 1⅛ (28) Ø formed holes in end section walls

SECTION A–A

(Showing end section tie details)

PIPE CULVERT END SECTION DIMENSIONS

Pipe I.D.	A	R	S	T	L Slope of End Section 1:2	1:3	1:4	1:6
15 (375)	14 (350)	29 (737)	28 (711)	8 (200)	5'-6" (1.68 m)	7'-11" (2.42 m)	10'-4" (3.16 m)	15'-2" (4.63 m)
18 (450)	15 (375)	33 (838)	32 (813)	8 (200)	6'-2" (1.88 m)	8'-11" (2.72 m)	11'-8" (3.56 m)	17'-2" (5.24 m)
21 (525)	15 (375)	36 (914)	34 (864)	8 (200)	6'-8" (2.03 m)	9'-8" (2.95 m)	12'-8" (3.86 m)	18'-8" (5.69 m)
24 (600)	15 (375)	39 (990)	38 (970)	8 (200)	7'-2" (2.19 m)	10'-5" (3.18 m)	13'-8" (4.17 m)	20'-2" (6.15 m)
27 (675)	15 (375)	3'-10" (1.17 m)	3'-6" (1.07 m)	8 (200)	8'-4" (2.54 m)	12'-2" (3.71 m)	16'-0" (4.88 m)	23'-8" (7.21 m)
30 (750)	16 (400)	4'-2" (1.27 m)	3'-10" (1.17 m)	8 (200)	9'-0" (2.75 m)	13'-2" (4.02 m)	17'-4" (5.29 m)	25'-8" (7.83 m)
33 (825)	16 (400)	4'-5" (1.35 m)	4'-0" (1.22 m)	8 (200)	9'-6" (2.90 m)	13'-11" (4.25 m)	18'-4" (5.60 m)	27'-2" (8.29 m)
36 (900)	16 (400)	4'-8" (1.42 m)	4'-4" (1.32 m)	8 (200)	10'-0" (3.05 m)	14'-8" (4.47 m)	19'-4" (5.90 m)	28'-8" (8.74 m)
42 (1050)	17 (425)	5'-3" (1.60 m)	5'-0" (1.52 m)	8 (200)	11'-2" (3.41 m)	16'-5" (5.01 m)	21'-8" (6.61 m)	32'-2" (9.81 m)
48 (1200)	17 (425)	5'-9" (1.75 m)	5'-6" (1.68 m)	8 (200)	12'-2" (3.71 m)	17'-11" (5.46 m)	23'-8" (7.22 m)	35'-2" (10.73 m)
54 (1350)	18 (450)	6'-4" (1.93 m)	6'-2" (1.88 m)	8 (200)	13'-4" (4.07 m)	19'-8" (6.00 m)	26'-0" (7.93 m)	38'-8" (11.79 m)
60 (1500)	18 (450)	6'-10" (2.08 m)	6'-8" (2.03 m)	8 (200)	14'-4" (4.37 m)	21'-2" (6.46 m)	28'-0" (8.54 m)	41'-8" (12.71 m)
66 (1650)	19 (475)	7'-5" (2.26 m)	7'-4" (2.24 m)	8 (200)	15'-6" (4.73 m)	22'-11" (6.99 m)	30'-4" (9.26 m)	45'-2" (13.78 m)
72 (1800)	19 (475)	7'-11" (2.41 m)	7'-10" (2.39 m)	8 (200)	16'-6" (5.03 m)	24'-5" (7.45 m)	32'-4" (9.87 m)	48'-2" (14.70 m)
78 (1950)	21 (525)	8'-6" (2.59 m)	8'-6" (2.59 m)	9 (230)	17'-9" (5.41 m)	26'-3" (8.01 m)	34'-9" (10.60 m)	51'-9" (15.78 m)
84 (2100)	21 (525)	9'-0" (2.74 m)	9'-0" (2.74 m)	9 (230)	18'-9" (5.72 m)	27'-9" (8.46 m)	36'-9" (11.21 m)	54'-9" (16.70 m)

GENERAL NOTES

This Standard is for use with single pipe culverts and multi-pipe culvert installations. For multi-pipe culvert installations, place the end sections side-by-side leaving a 3 (75) space between adjacent end section walls and fill the space(s) with Class SI concrete.

The number of segments shown in elevation is for example only. The length and number of precast sections required to construct the end section shall be determined by the Contractor.

See roadway plans for slope (V:H) and pipe inside diameter.

End section may be installed up to ± 15 degrees skewed with roadway.

2¼ x 2¼ x 5/16 (56 x 56 x 8) plate washers shall be provided under each nut required for the anchor rods. Holes in the walls for the culvert tie assembly may be drilled using core bits in lieu of formed holes.

See Standard 542311 for end sections having traversable pipe grate.

All slope ratios are expressed as units of vertical displacement to units of horizontal displacement (V:H).

All dimensions are in inches (millimeters) unless otherwise shown.

DATE	REVISIONS
4-15-16	Added general note for multiple end sections.
4-1-16	Added note to omit restraint angle and tie plate for mult. end sections.

Illinois Department of Transportation

APPROVED April 15, 2016
ENGINEER OF BRIDGES AND STRUCTURES

APPROVED April 15, 2016
ENGINEER OF DESIGN AND ENVIRONMENT

ISSUED 1-1-97

CONCRETE END SECTIONS FOR PIPE CULVERTS 15" (375 mm) THRU 84" (2100 mm) DIA.

(Sheet 1 of 3)

STANDARD 542001-06

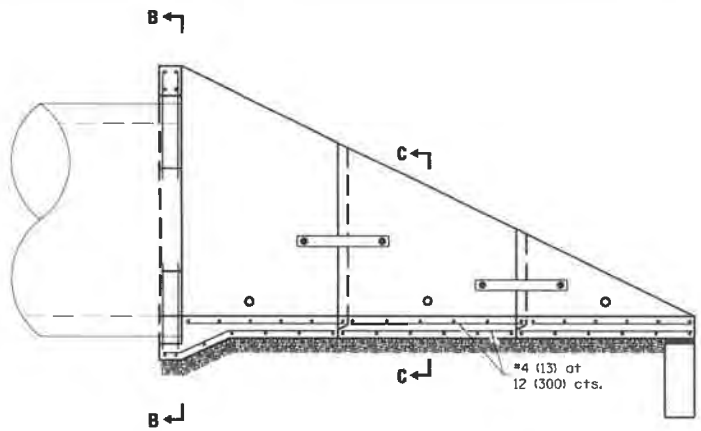

LONGITUDINAL SECTION
(Showing bottom slab and backwall reinforcement.)

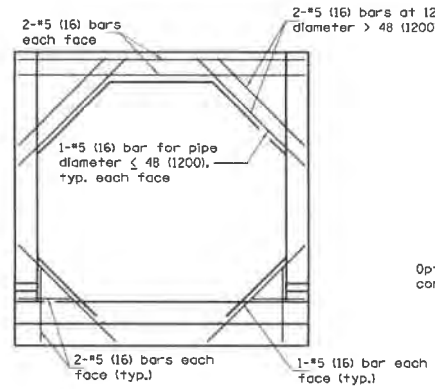

SECTION B–B
(Showing backwall reinforcement only.)
(Pipe omitted for clarity.)

LAP DIMENSION

#4 (13) bar = 17 (425)
#5 (16) bar = 21 (525)
#6 (19) bar = 25 (625)

* The Contractor may use lap splices for the sidewall reinforcement at the locations shown.

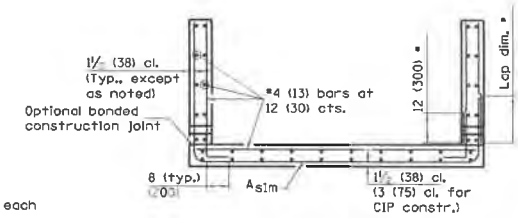

SECTION C–C

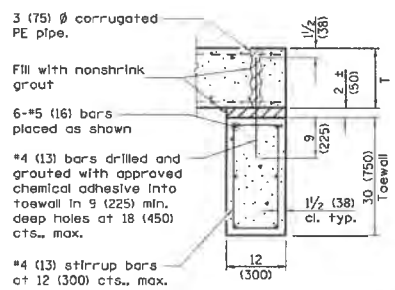

SECTION D–D

REINFORCEMENT SCHEDULE

Pipe I.D.	Asim Bar Size	Asim Bar Spacing
15 (375)	4 (13)	12 (300)
18 (450)	4 (13)	12 (300)
21 (525)	4 (13)	12 (300)
24 (600)	4 (13)	12 (300)
27 (675)	4 (13)	12 (300)
30 (750)	4 (13)	12 (300)
33 (825)	4 (13)	12 (300)
36 (900)	4 (13)	12 (300)
42 (1050)	4 (13)	8 (200)
48 (1200)	4 (13)	8 (200)
54 (1350)	5 (16)	8 (200)
60 (1500)	5 (16)	8 (200)
66 (1650)	5 (16)	8 (200)
72 (1800)	6 (19)	8 (200)
78 (1950)	6 (19)	8 (200)
84 (2100)	6 (19)	8 (200)

Illinois Department of Transportation

APPROVED April 15 2016
ENGINEER OF BRIDGES AND STRUCTURES
APPROVED April 15 2016
ENGINEER OF DESIGN AND ENVIRONMENT

ISSUED 1-1-97

CONCRETE END SECTIONS FOR PIPE CULVERTS
15" (375 mm) THRU 84" (2100 mm) DIA.

(Sheet 2 of 3)

STANDARD 542001–06

QUANTITIES

Pipe I.D.	Concrete yd³ (m³) ① Slope of End Section 1:2	1:3	1:4	1:6	Reinforcement Without Lap lbs. (kg) Slope of End Section 1:2	1:3	1:4	1:6	Reinforcement With Lap lbs (kg) Slope of End Section 1:2	1:3	1:4	1:6
15 (375)	1.3 (1.0)	1.7 (1.3)	2.1 (1.6)	2.8 (2.1)	190 (85.2)	230 (104.1)	280 (123.3)	360 (159.2)	210 (94.9)	260 (117.6)	310 (140.3)	410 (182.9)
18 (450)	1.6 (1.2)	2.1 (1.6)	2.6 (2.0)	3.5 (2.7)	230 (104.3)	290 (131.1)	350 (158.0)	460 (207.3)	260 (114.8)	330 (146.0)	400 (177.3)	520 (234.0)
21 (525)	1.8 (1.4)	2.3 (1.8)	2.9 (2.2)	3.9 (3.0)	260 (114.5)	320 (143.3)	380 (172.2)	510 (229.9)	280 (126.5)	360 (159.7)	430 (193.0)	580 (259.5)
24 (600)	2.1 (1.6)	2.7 (2.1)	3.3 (2.5)	4.5 (3.4)	270 (121.9)	350 (155.8)	420 (189.3)	560 (251.5)	300 (133.9)	390 (172.8)	470 (211.6)	630 (282.6)
27 (675)	2.6 (2.0)	3.4 (2.6)	4.2 (3.2)	5.8 (4.4)	350 (155.5)	440 (198.5)	540 (244.4)	740 (336.3)	380 (169.6)	480 (217.8)	600 (269.6)	830 (373.2)
30 (750)	2.9 (2.2)	3.9 (3.0)	4.9 (3.7)	6.8 (5.2)	380 (169.6)	490 (219.2)	600 (271.9)	830 (374.0)	410 (184.5)	530 (240.0)	660 (299.2)	920 (413.9)
33 (825)	3.2 (2.4)	4.3 (3.3)	5.3 (4.1)	7.4 (5.7)	400 (179.7)	520 (234.9)	640 (290.3)	880 (397.6)	430 (195.2)	570 (257.2)	710 (319.0)	970 (438.9)
36 (900)	3.5 (2.7)	4.7 (3.6)	5.9 (4.5)	8.3 (6.3)	440 (197.8)	580 (262.4)	720 (323.8)	990 (449.4)	480 (214.2)	630 (286.1)	780 (354.0)	1090 (493.7)
42 (1050)	4.3 (3.3)	5.8 (4.4)	7.3 (5.6)	10.3 (7.9)	570 (256.4)	770 (346.4)	950 (429.0)	1330 (601.3)	620 (279.4)	840 (380.0)	1040 (471.6)	1470 (663.7)
48 (1200)	5.0 (3.8)	6.8 (5.2)	8.6 (6.6)	12.2 (9.3)	670 (301.1)	910 (409.9)	1140 (514.8)	1610 (728.2)	720 (325.6)	990 (445.8)	1240 (561.2)	1760 (796.8)
54 (1350)	6.0 (4.6)	8.2 (6.3)	10.3 (7.9)	14.7 (11.2)	890 (403.6)	1200 (544.5)	1530 (692.0)	2170 (985.0)	990 (448.6)	1340 (608.1)	1710 (775.8)	2440 (1108.2)
60 (1500)	6.8 (5.2)	9.3 (7.1)	11.8 (9.0)	16.8 (12.8)	1020 (461.5)	1400 (635.3)	1780 (806.8)	2530 (1149.8)	1120 (508.8)	1550 (704.5)	1980 (896.8)	2820 (1281.5)
66 (1650)	7.9 (6.0)	10.9 (8.3)	13.8 (10.6)	19.7 (15.1)	1150 (519.0)	1570 (712.4)	2010 (911.1)	2880 (1305.8)	1260 (570.2)	1730 (786.1)	2220 (1007.9)	3190 (1449.3)
72 (1800)	8.8 (6.7)	12.2 (9.3)	15.5 (11.9)	22.2 (17.0)	1520 (689.9)	2120 (962.1)	2690 (1222.5)	3880 (1761.3)	1710 (777.0)	2400 (1088.2)	3050 (1384.8)	4410 (2001.0)
78 (1950)	11.4 (8.7)	15.8 (12.1)	20.1 (15.4)	28.9 (22.1)	1750 (791.1)	2400 (1090.7)	3100 (1409.0)	4490 (2039.7)	1950 (885.5)	2700 (1223.1)	3490 (1583.9)	5060 (2298.9)
84 (2100)	12.6 (9.6)	17.4 (13.3)	22.3 (17.0)	32.1 (24.5)	1900 (862.7)	2680 (1217.4)	3430 (1558.6)	4960 (2254.4)	2120 (959.6)	3000 (1359.6)	3840 (1743.2)	5560 (2526.8)

① For cast-in-place construction, increase concrete volumes by approximately 12%.

Illinois Department of Transportation

APPROVED April 15, 2016
ENGINEER OF BRIDGES AND STRUCTURES

APPROVED April 15, 2016
ENGINEER OF DESIGN AND ENVIRONMENT

ISSUED 1-1-87

CONCRETE END SECTIONS FOR PIPE CULVERTS 15" (375 mm) THRU 84" (2100 mm) DIA.

(Sheet 3 of 3)

STANDARD 542001-06

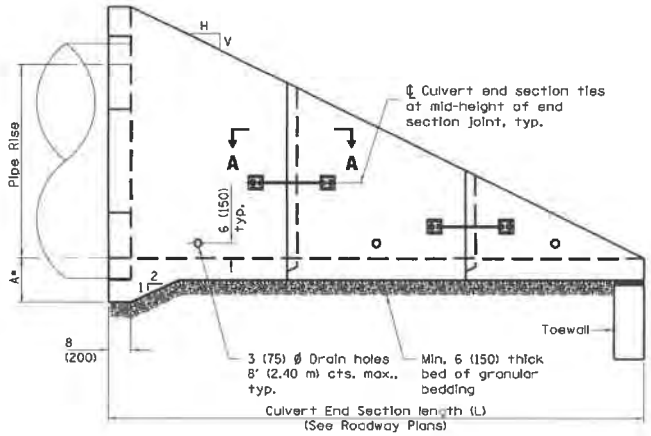

ELEVATION

* This dimension shall be increased by 1½ (38) for CIP field construction.

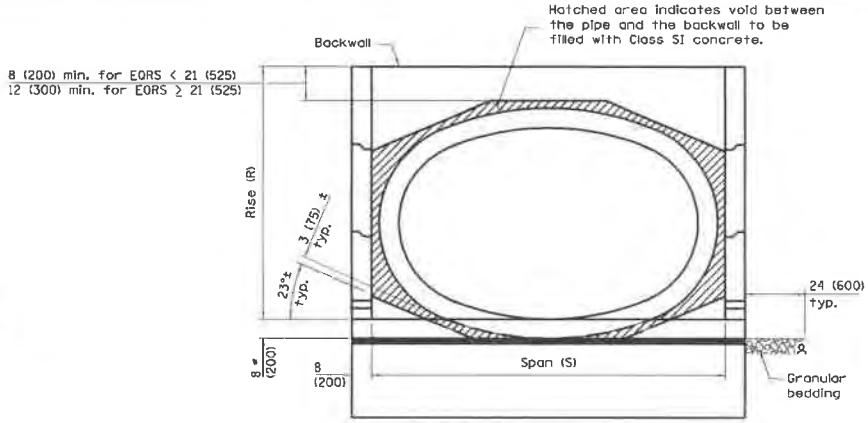

END VIEW

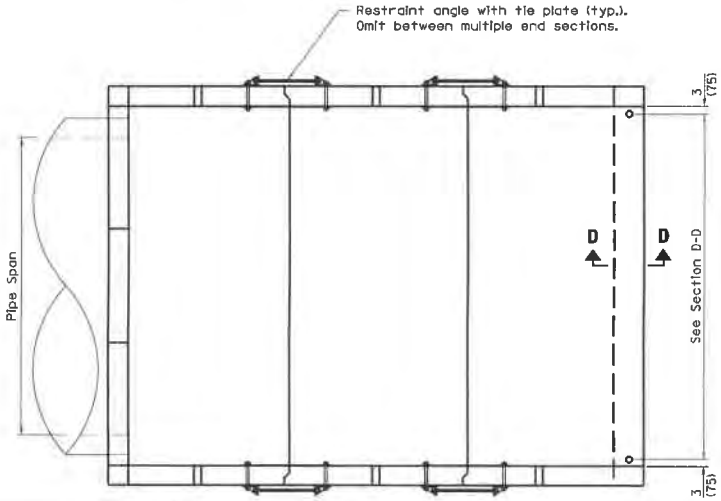

PLAN

PIPE CULVERT END SECTION DIMENSIONS

Equivalent Round Size Pipe I.D.	Pipe Span	Pipe Rise	A	R	S	L Slope of End Section 1:2	1:3	1:4	1:6
15 (375)	23 (575)	14 (350)	15 (375)	28 (711)	36 (914)	5'-4" (1.62 m)	7'-8" (2.34 m)	10'-0" (3.05 m)	14'-8" (4.47 m)
18 (450)	23 (575)	14 (350)	15 (375)	28 (711)	36 (914)	5'-4" (1.62 m)	7'-8" (2.34 m)	10'-0" (3.05 m)	14'-8" (4.47 m)
21 (525)	30 (750)	19 (475)	15 (375)	38 (365)	3'-8" (1.12 m)	7'-0" (2.14 m)	10'-2" (3.10 m)	13'-4" (4.07 m)	19'-8" (6.00 m)
24 (600)	30 (750)	19 (475)	15 (375)	38 (965)	3'-8" (1.12 m)	7'-0" (2.14 m)	10'-2" (3.10 m)	13'-4" (4.07 m)	19'-8" (6.00 m)
27 (675)	34 (850)	22 (550)	15 (375)	3'-5" (1.04 m)	4'-0" (1.22 m)	7'-6" (2.29 m)	10'-11" (3.33 m)	14'-4" (4.38 m)	21'-2" (6.46 m)
30 (750)	38 (950)	24 (600)	15 (375)	3'-7" (1.09 m)	4'-4" (1.32 m)	7'-10" (2.39 m)	11'-5" (3.48 m)	15'-0" (4.57 m)	22'-2" (6.75 m)
36 (900)	45 (1125)	29 (725)	16 (400)	4'-1" (1.24 m)	5'-0" (1.52 m)	8'-10" (2.69 m)	12'-11" (3.94 m)	17'-0" (5.18 m)	25'-2" (7.67 m)
42 (1050)	53 (1325)	34 (850)	16 (400)	4'-6" (1.37 m)	5'-10" (1.78 m)	9'-8" (2.95 m)	14'-2" (4.32 m)	18'-8" (5.69 m)	27'-8" (8.44 m)
48 (1200)	60 (1500)	38 (950)	17 (425)	4'-11" (1.50 m)	6'-6" (1.98 m)	10'-6" (3.20 m)	15'-5" (4.71 m)	20'-4" (6.21 m)	30'-2" (9.21 m)
54 (1350)	68 (1700)	43 (1075)	17 (425)	5'-4" (1.63 m)	7'-2" (2.18 m)	11'-4" (3.45 m)	16'-8" (5.08 m)	22'-0" (6.71 m)	32'-8" (9.96 m)
60 (1500)	76 (1900)	48 (1200)	18 (450)	5'-10" (1.78 m)	8'-0" (2.44 m)	12'-4" (3.76 m)	18'-2" (5.54 m)	24'-0" (7.32 m)	35'-8" (10.87 m)
66 (1650)	83 (2075)	53 (1325)	18 (450)	6'-3" (1.91 m)	8'-8" (2.64 m)	13'-2" (4.02 m)	19'-5" (5.92 m)	25'-8" (7.83 m)	38'-2" (11.64 m)
72 (1800)	91 (2275)	58 (1450)	19 (475)	6'-9" (2.06 m)	9'-4" (2.84 m)	14'-2" (4.32 m)	20'-11" (6.38 m)	27'-8" (8.44 m)	41'-2" (12.56 m)

See Sheet 3 for GENERAL NOTES.

Illinois Department of Transportation

APPROVED April 15, 2016
ENGINEER OF BRIDGES AND STRUCTURES
APPROVED APR 15, 2016
ENGINEER OF DESIGN AND ENVIRONMENT

ISSUED 1-1-13

DATE	REVISIONS
4-15-16	Added general note for multiple end sections.
4-1-16	Added note to omit restraint angle and tie plate for mult. end sections.

CONCRETE END SECTIONS FOR ELLIPTICAL PIPE CULVERTS 15" (375 mm) THRU 72" (1800 mm) EQUIVALENT DIAMETER

(Sheet 1 of 3)

STANDARD 542011-02

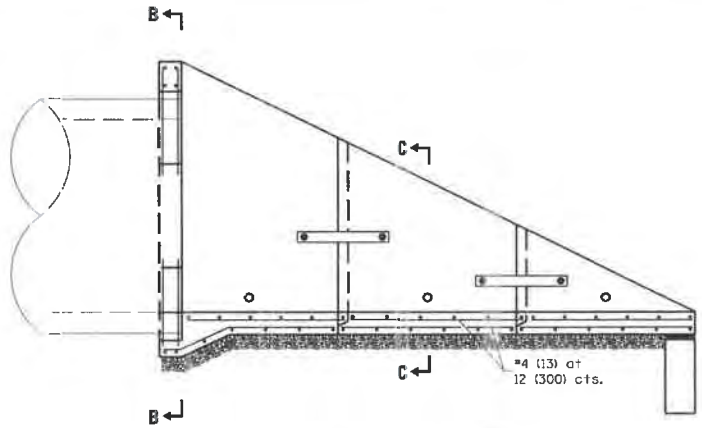

LONGITUDINAL SECTION
(Showing bottom slab and backwall reinforcement.)

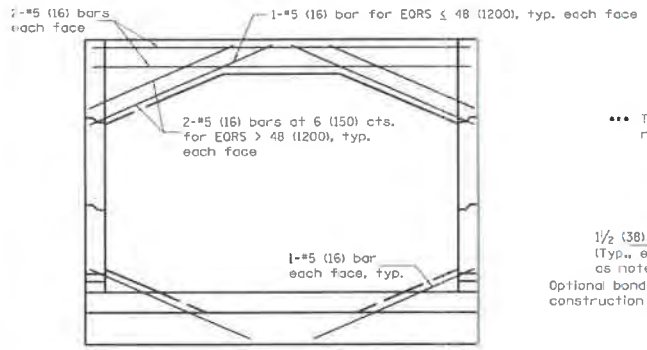

SECTION B–B
(Showing backwall reinforcement only.)
(Pipe omitted for clarity.)

LAP DIMENSION

#4 (13) bar = 17 (425)
#5 (16) bar = 21 (525)
#6 (19) bar = 25 (625)

••• The Contractor may use lap splices for the sidewall reinforcement at the locations shown.

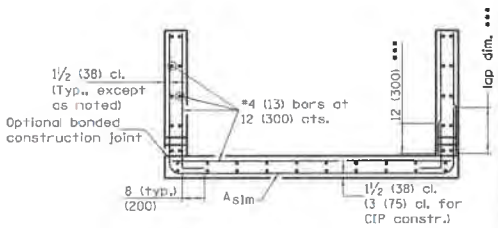

SECTION C–C

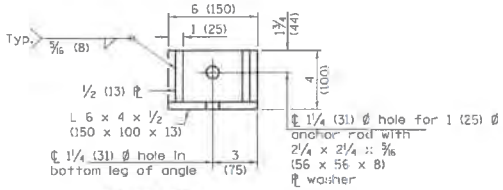

RESTRAINT ANGLE DETAIL

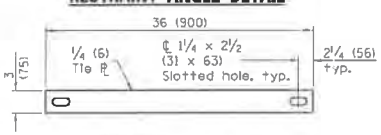

TIE PLATE DETAIL

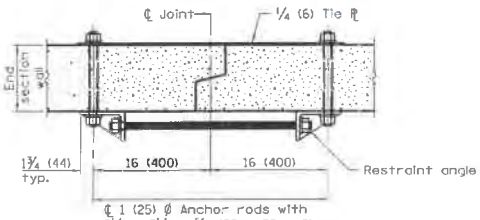

SECTION A–A
(Showing end section tie details)

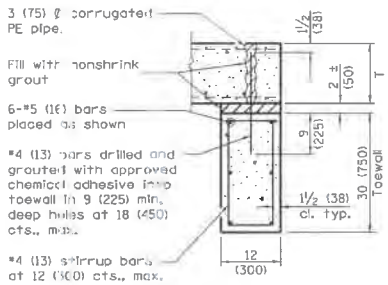

SECTION D–D

REINFORCEMENT SCHEDULE

Equivalent Round Size Pipe I.D.	A_{s1m}	
	Bar Size	Bar Spacing
15 (375)	4 (13)	12 (300)
18 (450)	4 (13)	12 (300)
21 (525)	4 (13)	12 (300)
24 (600)	4 (13)	12 (300)
27 (700)	4 (13)	12 (300)
30 (750)	4 (13)	12 (300)
36 (900)	4 (13)	12 (300)
42 (1050)	4 (13)	12 (300)
48 (1200)	4 (13)	8 (200)
54 (1350)	4 (13)	8 (200)
60 (1500)	4 (13)	8 (200)
66 (1650)	5 (16)	8 (200)
72 (1800)	5 (16)	8 (200)

Illinois Department of Transportation
APPROVED Apr 15, 2016
ENGINEER OF BRIDGES AND STRUCTURES
APPROVED Apr 15, 2016
ENGINEER OF DESIGN AND ENVIRONMENT
155620 1-1-13

CONCRETE END SECTIONS FOR ELLIPTICAL PIPE CULVERTS 15" (375 mm) THRU 72" (1800 mm) EQUIVALENT DIAMETER
(Sheet 2 of 3)

STANDARD 542011–02

QUANTITIES

Equivalent Round Size Pipe I.D.	Concrete yd³ (m³) ① Slope of End Section				Reinforcement Without Lap lbs. (kg) Slope of End Section				Reinforcement With Lap lbs (kg) Slope of End Section			
	1:2	1:3	1:4	1:6	1:2	1:3	1:4	1:6	1:2	1:3	1:4	1:6
15 (375)	1.5 (1.1)	1.9 (1.6)	2.3 (1.8)	3.0 (2.3)	220 (120.8)	270 (148.3)	320 (172.9)	420 (228.5)	240 (132.3)	300 (164.3)	350 (192.8)	470 (257.4)
18 (450)	1.5 (1.3)	1.9 (1.6)	2.1 (1.8)	3.0 (2.3)	220 (120.8)	270 (148.3)	320 (172.9)	420 (228.5)	240 (132.3)	300 (164.3)	350 (192.8)	470 (257.4)
21 (525)	2.2 (1.7)	2.8 (2.1)	3.5 (2.7)	4.8 (3.7)	310 (167.2)	390 (172.9)	470 (211.5)	630 (285.2)	330 (181.8)	420 (189.3)	520 (232.9)	700 (316.3)
24 (600)	2.2 (1.7)	2.8 (2.1)	3.5 (2.7)	4.8 (3.7)	310 (167.2)	390 (172.9)	470 (211.5)	630 (285.2)	330 (181.8)	420 (189.3)	520 (232.9)	700 (316.3)
27 (700)	2.5 (1.9)	3.2 (2.4)	3.9 (3.0)	5.4 (4.1)	330 (181.7)	420 (190.1)	510 (231.4)	690 (310.5)	360 (197.0)	460 (208.0)	560 (254.3)	760 (343.1)
30 (750)	2.7 (2.1)	3.5 (2.7)	4.3 (3.3)	5.9 (4.5)	350 (193.1)	450 (201.9)	540 (244.9)	730 (331.3)	380 (209.5)	490 (220.4)	600 (268.7)	810 (365.3)
36 (900)	3.3 (2.5)	4.4 (3.4)	5.4 (4.1)	7.5 (5.7)	430 (237.6)	560 (252.2)	690 (309.3)	940 (423.4)	470 (255.8)	610 (273.0)	740 (335.9)	1020 (461.8)
42 (1050)	4.0 (3.1)	5.3 (4.1)	6.6 (5.0)	9.2 (7.0)	510 (279.8)	660 (295.6)	820 (369.1)	1120 (508.5)	550 (299.8)	700 (317.9)	880 (398.7)	1220 (551.3)
48 (1200)	4.7 (3.6)	6.2 (4.7)	7.8 (6.0)	10.9 (8.3)	660 (362.5)	870 (391.5)	1070 (485.4)	1490 (672.8)	710 (389.5)	940 (422.8)	1160 (525.7)	1610 (731.4)
54 (1350)	5.3 (4.1)	7.2 (5.5)	9.0 (6.9)	12.6 (9.6)	730 (400.1)	960 (434.4)	1190 (540.2)	1670 (756.6)	780 (428.9)	1030 (467.9)	1290 (583.7)	1810 (820.5)
60 (1500)	6.3 (4.8)	8.5 (6.5)	10.7 (8.2)	15.1 (11.5)	830 (458.1)	1110 (500.0)	1390 (629.0)	1950 (882.2)	890 (488.7)	1180 (535.9)	1490 (676.2)	2100 (951.4)
66 (1650)	7.1 (5.4)	9.6 (7.3)	12.2 (9.3)	17.2 (13.2)	1080 (596.0)	1470 (665.5)	1840 (836.2)	2610 (1185.3)	1180 (650.1)	1610 (729.0)	2030 (918.3)	2880 (1306.3)
72 (1800)	8.2 (6.3)	11.1 (8.5)	14.0 (10.7)	19.8 (14.9)	1190 (653.9)	1620 (734.2)	2050 (931.6)	2930 (1328.9)	1290 (710.7)	1770 (801.7)	2250 (1019.9)	3220 (1460.0)

① For cast-in-place construction, increase concrete volumes by approximately 13%.

GENERAL NOTES

This Standard is used with single pipe culverts and multi-pipe culvert installations. For multi-pipe culvert installations, place the end sections side-by-side leaving a 3 (75) space between adjacent end section walls and fill the space(s) with Class SI concrete.

The number of segments shown in elevation is for example only. The length and number of precast sections required to construct the end section shall be determined by the Contractor.

See roadway plans for slope (V:H) and pipe inside diameter.

End section may be installed up to ± 15 degrees skewed with roadway.

2¼ x 2¼ x 5/16 (56 x 56 x 8) plate washers shall be provided under each nut required for the anchor rods. Holes in the walls for the culvert tie assembly may be drilled using core bits in lieu of formed holes.

See Standard 542311 for end sections having traversable pipe grate.

All slope ratios are expressed as units of vertical displacement to units of horizontal displacement (V:H).

All dimensions are in inches (millimeters) unless otherwise shown.

Illinois Department of Transportation

APPROVED April 15, 2016
ENGINEER OF BRIDGES AND STRUCTURES

APPROVED April 15, 2016
ENGINEER OF DESIGN AND ENVIRONMENT

ISSUED 1-1-13

CONCRETE END SECTIONS FOR ELLIPTICAL PIPE CULVERTS 15" (375 mm) THRU 72" (1800 mm) EQUIVALENT DIAMETER

(Sheet 3 of 3)

STANDARD 542011-02

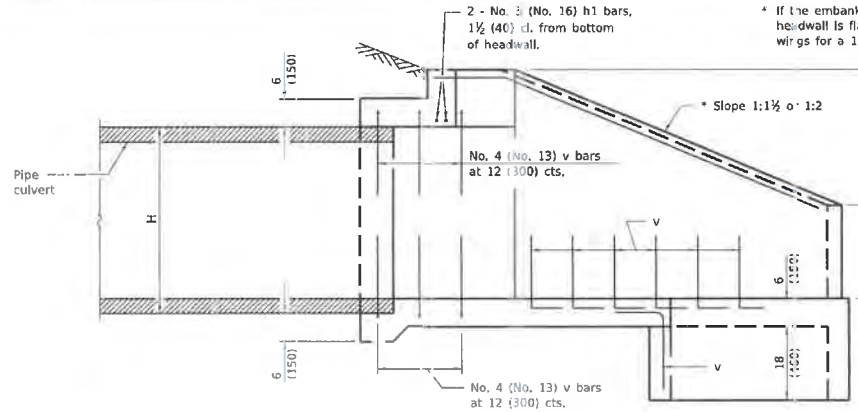

SECTION A-A

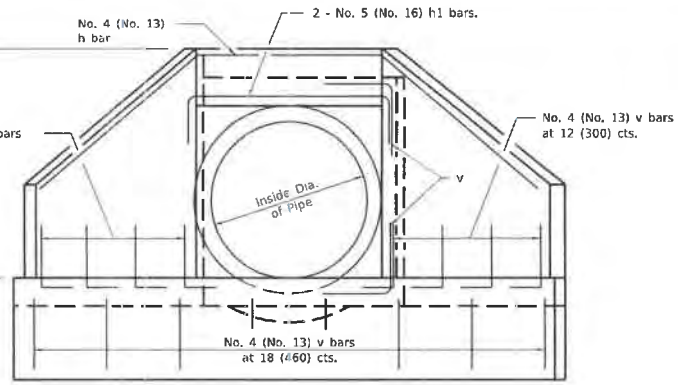

END VIEW

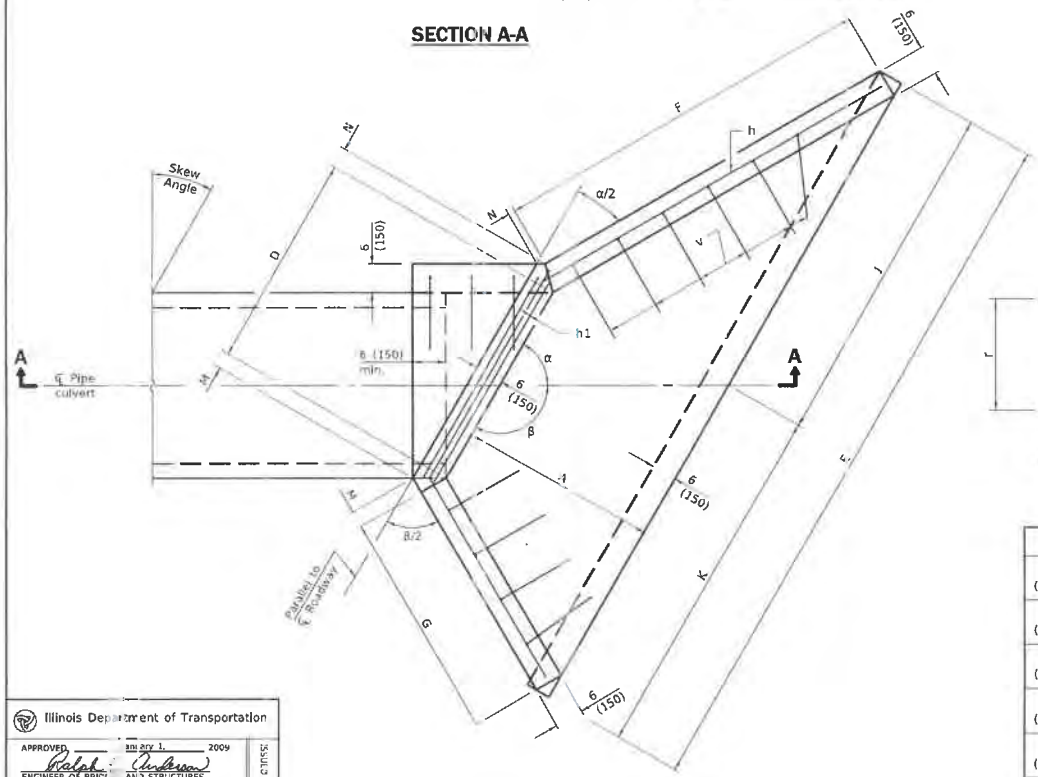

PLAN

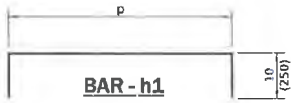

BAR - h1

Bent in field, two req. for each headwall.

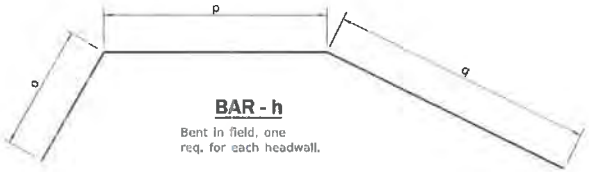

BAR - h

Bent in field, one req. for each headwall.

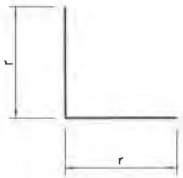

BAR - v

Dia.	r
15 (375)	21 (551)
18 (450)	24 (626)
24 (600)	30 (765)
30 (750)	36 (917)
36 (900)	3'-6" (1.08 m)

GENERAL NOTES

Build tops of headwalls parallel to grade line.

All slope ratios are expressed as units of vertical displacement to units of horizontal displacement (V:H).

All dimensions are in inches (millimeters) unless otherwise shown.

DATE	REVISIONS
1-1-09	Switched units to English (metric).
1-1-07	Soft converted metric reinforcement bars. Added h bars.

REINFORCED CONCRETE END SECTIONS FOR PIPE CULVERTS
15" (375 mm) THRU 36" (900 mm) DIA.
SKEWED WITH ROADWAY

(Sheet 1 of 5)

STANDARD 542201-02

Illinois Department of Transportation

APPROVED January 1, 2009
ENGINEER OF BRIDGES AND STRUCTURES

APPROVED January 1, 2009
ENGINEER OF DESIGN AND ENVIRONMENT

ISSUED 1-1-97

WINGS FOR 1:1½ SLOPE

Skew Angle	Design No.	Nominal Pipe Dia.	DIMENSIONS FOR CONCRETE A	B	C	D	E	F	G	H	J	K	M	N	α	Concrete 2 End Sections yd³ (m³)	Reinf. Bars - 2 End Sections h - bars o	p	q	Lgth.	h1 - bars p	Lgth.	v-bars No.	Bars for 2 End Sections lbs. (kg)
5°	DS 15-1½ (DS 375-1½)	15 (375)	28 (720)	10 (260)	29 (740)	19 (485)	6'-11¼" (2.15 m)	3'-5½" (1.07 m)	38 (980)	19 (483)	3'-5¼" (1.07 m)	3'-6" (1.08 m)	2¼ (70)	2¼ (60)	85°	1.4 (1.1)	3'-6" (1.01 m)	21 (551)	3'-9" (1.09 m)	9'-0" (2.65 m)	21 (551)	3'-5" (1.04 m)	28	90 (41)
	DS 18-1½ (DS 450-1½)	18 (450)	28 (720)	13 (330)	32 (810)	22 (561)	7'-2¼" (2.22 m)	3'-5½" (1.07 m)	38 (980)	22 (559)	3'-7¼" (1.11 m)	3'-7½" (1.11 m)	2¼ (70)	2¼ (60)	85°	1.6 (1.2)	3'-6" (1.03 m)	24 (626)	3'-9" (1.12 m)	9'-3" (2.78 m)	24 (626)	3'-8" (1.12 m)	28	100 (45)
	DS 24-1½ (DS 600-1½)	24 (600)	34 (870)	16 (410)	39 (990)	30 (765)	8'-10¾" (2.73 m)	4'-2¼" (1.29 m)	3'-10" (1.18 m)	30 (762)	4'-5¼" (1.36 m)	4'-5½" (1.37 m)	2¾ (70)	2¼ (60)	85°	2.2 (1.7)	4'-3" (1.23 m)	32 (832)	4'-7" (1.33 m)	11'-6" (3.39 m)	32 (832)	4'-4" (1.32 m)	32	140 (63)
	DS 30-1½ (DS 750-1½)	30 (750)	39 (990)	19 (480)	3'-9" (1140)	36 (917)	10'-3" (3.12 m)	4'-9¼" (1.47 m)	4'-5" (1.35 m)	36 (914)	5'-1¼" (1.56 m)	5'-1¾" (1.56 m)	2¾ (70)	2¼ (60)	85°	2.7 (2.1)	4'-10" (1.39 m)	39 (983)	5'-2" (1.51 m)	13'-3" (3.88 m)	39 (983)	4'-11" (1.50 m)	36	180 (81)
	DS 36-1½ (DS 900-1½)	36 (900)	3'-9" (1140)	22 (560)	4'-4" (1320)	3'-8¼" (1123)	11'-11" (3.63 m)	5'-6½" (1.69 m)	5'-1" (1.55 m)	3'-8" (1.119 m)	5'-11¼" (1.81 m)	5'-11¾" (1.82 m)	2¾ (70)	2¼ (60)	85°	3.3 (2.5)	5'-7" (1.6 m)	3'-11" (1.19 m)	6'-0" (1.73 m)	15'-6" (4.52 m)	3'-11" (1.19 m)	5'-7" (1.70 m)	42	240 (108)
10°	DS 15-1½ (DS 375-1½)	15 (375)	28 (720)	10 (260)	29 (740)	19⅛ (490)	7'-0½" (2.17 m)	3'-7½" (1.12 m)	36½ (940)	19 (483)	3'-6" (1.08 m)	3'-6½" (1.09 m)	2¼ (70)	2¼ (60)	80°	1.5 (1.2)	3'-4" (972)	22 (557)	3'-10" (1.14 m)	9'-0" (2.67 m)	22 (557)	3'-6" (1.07 m)	28	90 (41)
	DS 18-1½ (DS 450-1½)	18 (450)	28 (720)	13 (330)	32 (810)	22¼ (568)	7'-3¼" (2.24 m)	3'-7½" (1.12 m)	36½ (940)	22 (559)	3'-7½" (1.11 m)	3'-8¼" (1.13 m)	2¼ (70)	2¼ (60)	80°	1.6 (1.2)	3'-4" (990)	25 (633)	3'-10" (1.17 m)	9'-3" (2.8 m)	25 (633)	3'-9" (1.14 m)	28	100 (45)
	DS 24-1½ (DS 600-1½)	24 (600)	34 (870)	16 (410)	39 (990)	30½ (774)	9'-0" (2.76 m)	4'-5" (1.36 m)	3'-8½" (1.14 m)	30 (762)	4'-5¾" (1.37 m)	4'-6¼" (1.39 m)	2¾ (70)	2¼ (60)	80°	2.2 (1.7)	4'-1" (1.18 m)	33 (841)	4'-8" (1.4 m)	11'-6" (3.42 m)	33 (841)	4'-5" (1.35 m)	34	150 (68)
	DS 30-1½ (DS 750-1½)	30 (750)	39 (990)	19 (480)	3'-9" (1140)	36½ (928)	10'-4½" (3.15 m)	5'-0¼" (1.54 m)	4'-3" (1.3 m)	36 (914)	5'-1¼" (1.57 m)	5'-2½" (1.58 m)	2¾ (70)	2¼ (60)	80°	2.8 (2.1)	4'-9" (1.34 m)	39 (993)	5'-6" (1.58 m)	13'-6" (3.92 m)	39 (993)	4'-11" (1.50 m)	36	180 (81)
	DS 36-1½ (DS 900-1½)	36 (900)	3'-9" (1140)	22 (560)	4'-4" (1320)	3'-8¼" (1136)	12'-0½" (3.67 m)	5'-10" (1.78 m)	4'-10¼" (1.49 m)	3'-8" (1.119 m)	6'-0" (1.83 m)	6'-0½" (1.84 m)	2¾ (70)	2¼ (60)	80°	3.5 (2.7)	5'-6" (1.54 m)	3'-11" (1.2 m)	6'-4" (1.82 m)	15'-9" (4.56 m)	3'-11" (1.2 m)	5'-7" (1.70 m)	42	240 (108)
15°	DS 15-1½ (DS 375-1½)	15 (375)	28 (720)	10 (260)	29 (740)	19¾ (500)	7'-2" (2.2 m)	3'-10" (1.19 m)	35¼ (910)	19 (483)	3'-6½" (1.09 m)	3'-7½" (1.11 m)	3 (80)	2 (50)	75°	1.5 (1.2)	3'-4" (942)	22 (567)	4'-1" (1.2 m)	9'-3" (2.71 m)	22 (567)	3'-6" (1.07 m)	28	90 (41)
	DS 18-1½ (DS 450-1½)	18 (450)	28 (720)	13 (330)	32 (810)	22¼ (579)	7'-5¼" (2.28 m)	3'-10" (1.19 m)	35¼ (910)	22 (559)	3'-8 " (1.13 m)	3'-9¼" (1.15 m)	3 (80)	2 (50)	75°	1.7 (1.3)	3'-4" (965)	25 (644)	4'-1" (1.23 m)	9'-6" (2.84 m)	25 (644)	3'-9" (1.14 m)	28	100 (45)
	DS 24-1½ (DS 600-1½)	24 (600)	34 (870)	16 (410)	39 (990)	31 (789)	9'-2" (2.8 m)	4'-7¼" (1.43 m)	3'-6¼" (1.1 m)	30 (762)	4'-6½" (1.39 m)	4'-7½" (1.41 m)	3 (80)	2 (50)	75°	2.3 (1.8)	4'-0" (1.15 m)	34 (857)	4'-11" (1.47 m)	11'-9" (3.47 m)	34 (857)	4'-6" 1.37 m)	34	150 (68)
	DS 30-1½ (DS 750-1½)	30 (750)	39 (990)	19 (480)	3'-9" (1140)	37¼ (946)	10'-6½" (3.21 m)	5'-4" (1.63 m)	4'-1¼" (1.25 m)	36 (914)	5'-2¼" (1.59 m)	5'-3¼" (1.62 m)	3 (80)	2 (50)	75°	2.9 (2.2)	4'-8" (1.3 m)	3'-4" (1.01 m)	5'-9" (1.67 m)	13'-9" (3.98 m)	3'-4" (1.01 m)	5'-0" (1.52 m)	40	200 (90)
	DS 36-1½ (DS 900-1½)	36 (900)	3'-9" (1140)	22 (560)	4'-4" (1320)	3'-9½" (1158)	12'-3¼" (3.73 m)	6'-2" (1.87 m)	4'-8¼" (1.44 m)	3'-8" (1.119 m)	6'-1" (1.85 m)	6'-2¼" (1.88 m)	3 (80)	2 (50)	75°	3.8 (2.9)	5'-3" (1.49 m)	4'-0" (1.22 m)	6'-6" 1.92 m)	15'-9" (4.63 m)	4'-0" (1.22 m)	5'-8" (1.73 m)	46	260 (117)
20°	DS 15-1½ (DS 375-1½)	15 (375)	28 (720)	10 (260)	29 (740)	20¼ (514)	7'-4" (2.26 m)	4'-0¾" (1.26 m)	34¼ (880)	19 (483)	3'-7¼" (1.11 m)	3'-8¼" (1.15 m)	3 (80)	2 (50)	70°	1.6 (1.2)	39 (916)	23 (581)	4'-4" (1.27 m)	9'-6" (2.77 m)	23 (581)	3'-7" (1.09 m)	28	90 (41)
	DS 18-1½ (DS 450-1½)	18 (450)	28 (720)	13 (330)	32 (810)	23½ (595)	7'-7½" (2.34 m)	4'-0¾" (1.26 m)	34¼ (880)	22 (559)	3'-9" (1.15 m)	3'-10½" (1.19 m)	3 (80)	2 (50)	70°	1.7 (1.3)	39 (938)	26 (661)	4'-4" (1.31 m)	9'-9" (2.9 m)	26 (661)	3'-10" (1.17 m)	28	100 (45)
	DS 24-1½ (DS 600-1½)	24 (600)	34 (870)	16 (410)	39 (990)	32 (811)	9'-4½" (2.87 m)	4'-11¼" (1.52 m)	3'-5½" (1.07 m)	30 (762)	4'-7½" (1.42 m)	4'-9" (1.45 m)	3 (80)	2 (50)	70°	2.4 (1.8)	3'-11" (1.11 m)	35 (879)	5'-2" (1.56 m)	12'-0" (3.55 m)	35 (879)	4'-7" (1.40 m)	38	160 (72)
	DS 30-1½ (DS 750-1½)	30 (750)	39 (990)	19 (480)	3'-9" (1140)	28¼ (973)	10'-9¼" (3.29 m)	5'-8" (1.73 m)	3'-11½" (1.21 m)	36 (914)	5'-4¼" (1.63 m)	5'-5½" (1.66 m)	3 (80)	2 (50)	70°	3.1 (2.4)	4'-5" (1.26 m)	3'-5" (1.04 m)	5'-11" (1.77 m)	13'-9" (4.07 m)	3'-5" (1.04 m)	5'-1" (1.55 m)	42	210 (95)
	DS 36-1½ (DS 900-1½)	36 (900)	3'-9" (1140)	22 (560)	4'-4" (1320)	3'-10¼" (1191)	12'-7" (3.86 m)	6'-6½" (1.99 m)	4'-7" (1.41 m)	3'-8" (1.119 m)	6'-2¾" 1.9 m)	6'-4¼" (1.93 m)	3 (80)	2 (50)	70°	4.0 (3.1)	5'-3" 1.45 m)	4'-1" (1.26 m)	6'-11" (2.03 m)	16'-3" (4.73 m)	4'-1" (1.26 m)	5'-9" (1.75 m)	50	280 (126)
25°	DS 15-1½ (DS 375-1½)	15 (375)	28 (720)	10 (260)	29 (740)	21 (533)	7'-7" (2.33 m)	4'-4" (1.34 m)	33¼ (860)	19 (483)	3'-8½" (1.14 m)	3'-10½" (1.19 m)	3¼ (90)	1¾ (50)	65°	1.6 (1.2)	39 (893)	23 (600)	4'-7" (1.36 m)	9'-9" (2.85 m)	23 (600)	3'-7" (1.09 m)	28	90 (41)
	DS 18-1½ (DS 450-1½)	18 (450)	28 (720)	13 (330)	32 (810)	24¼ (617)	7'-10¼" (2.42 m)	4'-4" (1.34 m)	33¼ (860)	22 (559)	3'-10¼" (1.19 m)	4'-0" (1.23 m)	3¼ (90)	1¼ (50)	65°	1.8 (1.4)	38 (914)	27 (683)	4'-7" (1.39 m)	10'-0" (2.99 m)	27 (683)	3'-11" (1.19 m)	32	120 (54)
	DS 24-1½ (DS 600-1½)	24 (600)	34 (870)	16 (410)	39 (990)	33 (841)	9'-8½" (2.97 m)	5'-3¼" (1.62 m)	3'-4¼" (1.04 m)	30 (762)	4'-9¼" (1.46 m)	4'-11¼" (1.51 m)	3¼ (90)	1¼ (50)	65°	2.5 (1.9)	3'-10" 1.09 m)	35 (909)	5'-6" (1.66 m)	12'-3" (3.65 m)	35 (909)	4'-7" (1.40 m)	38	160 (72)
	DS 30-1½ (DS 750-1½)	30 (750)	39 (990)	19 (480)	3'-9" (1140)	3'-3¾" (1008)	11'-2" (3.4 m)	6'-0½" (1.83 m)	3'-10¾" (1.18 m)	36 (914)	5'-6" (1.68 m)	5'-8" (1.72 m)	3¼ (90)	1¼ (50)	65°	3.3 (2.5)	4'-5" (1.23 m)	3'-6" (1.08 m)	6'-4" (1.88 m)	14'-3" (4.18 m)	3'-6" (1.08 m)	5'-2" (1.58 m)	44	220 (99)
	DS 36-1½ (DS 900-1½)	36 (900)	3'-9" (1140)	22 (560)	4'-4" (1320)	4'-0½" (1235)	13'-0¼" (3.96 m)	6'-11¾" (2.12 m)	4'-5¼" (1.36 m)	3'-8" (1.119 m)	6'-5¼" (1.96 m)	6'-7° (2 m)	3¼ (90)	1¾ (50)	65°	4.3 (3.3)	5'-0" (1.41 m)	4'-3" (1.3 m)	7'-3" (2.16 m)	16'-6" (4.87 m)	4'-3" (1.3 m)	5'-11" (1.80 m)	50	280 (126)
30°	DS 15-1½ (DS 375-1½)	15 (375)	28 (720)	10 (260)	29 (740)	22 (558)	7'-10¼" (2.43 m)	4'-8" (1.44 m)	32¼ (830)	19 (483)	3'-10¼" (1.19 m)	4'-0½" (1.24 m)	3¼ (90)	1½ (40)	60°	1.7 (1.3)	37 (873)	24 (626)	4'-11" (1.46 m)	10'-0" (2.95 m)	24 (626)	3'-8" (1.12 m)	36	110 (50)
	DS 18-1½ (DS 450-1½)	18 (450)	28 (720)	13 (330)	32 (810)	25½ (645)	8'-2¼" (2.52 m)	4'-8" (1.44 m)	32¼ (830)	22 (559)	4'-0" (1.23 m)	4'-2¼" (1.29 m)	3¼ (90)	1½ (40)	60°	1.9 (1.5)	38 (893)	28 (712)	5'-0" (1.49 m)	10'-6" (3.1 m)	28 (712)	4'-0" (1.22 m)	36	130 (59)
	DS 24-1½ (DS 600-1½)	24 (600)	34 (870)	16 (410)	39 (990)	34¾ (880)	10'-1¾" (3.1 m)	5'-8" (1.74 m)	3'-3¾" (1.01 m)	30 (762)	4'-11½" (1.52 m)	5'-1¼" (1.58 m)	3¼ (90)	1½ (40)	60°	2.7 (2.1)	3'-9" (1.06 m)	37 (949)	5'-11" (1.78 m)	12'-9" (3.79 m)	37 (949)	4'-9" (1.45 m)	40	170 (77)
	DS 30-1½ (DS 750-1½)	30 (750)	39 (990)	19 (480)	3'-9" (1140)	3'-5½" (1055)	11'-7¼" (3.55 m)	6'-6" (1.98 m)	3'-9" (1.15 m)	36 (914)	5'-8¼" (1.75 m)	5'-11" (1.8 m)	3¼ (90)	1½ (40)	60°	3.5 (2.7)	4'-4" (1.2 m)	3'-8" (1.12 m)	6'-9" (2.02 m)	14'-9" (4.34 m)	3'-8" (1.12 m)	5'-4" (1.63 m)	46	230 (104)
	DS 36-1½ (DS 900-1½)	36 (900)	3'-9" (1140)	22 (560)	4'-4" (1320)	4'-2¾" (1292)	13'-7" (4.13 m)	7'-6" (2.28 m)	4'-4" (1.32 m)	3'-8" (1.119 m)	6'-8½" (2.04 m)	6'-10½" (2.09 m)	3¼ (90)	1½ (40)	60°	4.6 (3.5)	5'-0" (1.37 m)	4'-5" (1.36 m)	7'-10" (2.32 m)	17'-3" (5.05 m)	4'-5" (1.36 m)	6'-1" (1.86 m)	54	300 (135)

Illinois Department of Transportation

APPROVED January 1, 2009
ENGINEER OF BRIDGES AND STRUCTURES

APPROVED January 1 2009
ENGINEER OF DESIGN AND ENVIRONMENT

ISSUED 1-1-97

REINFORCED CONCRETE END SECTIONS FOR PIPE CULVERTS 15" (375 mm) THRU 36" (900 mm) DIA. SKEWED WITH ROADWAY

(Sheet 2 of 5)

STANDARD 542201-02

WINGS FOR 1:1½ SLOPE

Skew Angle	Design No.	Nominal Pipe Dia.	DIMENSIONS FOR CONCRETE A	B	C	D	E	F	G	H	I	K	M	N	α	Concrete 2 End Sections yd³ (m³)	Reinf. Bars - 2 End Sections h - bars o	p	q	Lgth.	h1 - bars p	Lgth.	v-bars No.	Bars for 2 End Sections lbs. (kg)
35°	DS 15-1½ (DS 375-1½)	15 (375)	28 (720)	10 (260)	29 (740)	23½ (590)	8'-3⅜" (2.55 m)	5'-0⅜" (1.56 m)	31½ (820)	19 (483)	4'-0½" (1.24 m)	4'-3" (1.31 m)	3¾ (90)	1½ (40)	55°	1.8 (1.4)	37 (855)	26 (658)	5'-3" (1.57 m)	10'-6" (3.09 m)	26 (658)	3'-10" (1.17 m)	36	110 (50)
	DS 18-1½ (DS 450-1½)	18 (450)	28 (720)	13 (330)	32 (810)	27 (682)	8'-7¼" (2.65 m)	5'-0⅜" (1.56 m)	31½ (820)	22 (559)	4'-2¼" (1.29 m)	4'-5" (1.36 m)	3¾ (90)	1½ (40)	55°	2.0 (1.5)	37 (876)	29 (750)	5'-3" (1.61 m)	10'-9" (3.24 m)	29 (750)	4'-1" (1.25 m)	36	130 (59)
	DS 24-1½ (DS 600-1½)	24 (600)	34 (870)	16 (410)	39 (990)	36½ (930)	10'-7¾" (3.26 m)	6'-1¾" (1.88 m)	38¾ (980)	30 (762)	5'-2½" (1.6 m)	5'-5¼" (1.66 m)	3¾ (90)	1½ (40)	55°	2.9 (2.2)	3'-8" (1.04 m)	39 (1.0 m)	6'-4" (1.92 m)	13'-3" (3.96 m)	39 (1.0 m)	4'-11" (1.50 m)	40	170 (77)
	DS 30-1½ (DS 750-1½)	30 (750)	39 (990)	19 (480)	3'-9" (1140)	3'-8" (1.116 m)	12'-3¼" (3.74 m)	7'-0½" (2.15 m)	3'-8" (1.12 m)	36 (914)	6'-0⅛" (1.84 m)	6'-3" (1.9 m)	3¾ (90)	1½ (40)	55°	3.7 (2.8)	4'-2" (1.17 m)	3'-11" (1.18 m)	7'-2" (2.18 m)	15'-3" (4.54 m)	3'-11" (1.18 m)	5'-7" (1.70 m)	50	240 (108)
	DS 36-1½ (DS 900-1½)	36 (900)	3'-9" (1140)	22 (560)	4'-4" (1320)	4'-5⅛" (1.366 m)	14'-3¾" (4.35 m)	8'-1½" (2.47 m)	4'-2¾" (1.3 m)	3'-8" (1.119 m)	7'-0½" (2.14 m)	7'-3¼" (2.21 m)	3¾ (90)	1½ (40)	55°	4.9 (3.8)	4'-11" (1.34 m)	4'-8" (1.43 m)	8'-5" (2.51 m)	18'-0" (5.29 m)	4'-8" (1.43 m)	6'-4" (1.93 m)	56	310 (140)
40°	DS 15-1½ (DS 375-1½)	15 (375)	28 (720)	10 (260)	29 (740)	24⅝ (631)	8'-10" (2.71 m)	5'-6⅛" (1.71 m)	31 (780)	19 (483)	4'-3⅛" (1.32 m)	4'-6½" (1.39 m)	3⅝ (100)	1⅛ (40)	50°	1.9 (1.5)	37 (840)	27 (700)	5'-8" (1.71 m)	11'-0" (3.25 m)	27 (700)	3'-11" (1.19 m)	38	120 (54)
	DS 18-1½ (DS 450-1½)	18 (450)	28 (720)	13 (330)	32 (810)	28⅝ (730)	9'-1¾" (2.81 m)	5'-6¼" (1.71 m)	31 (780)	22 (559)	4'-5⅛" (1.37 m)	4'-8¼" (1.44 m)	3⅝ (100)	1⅛ (40)	50°	2.2 (1.7)	36 (860)	31 (798)	5'-8" (1.76 m)	11'-3" (3.41 m)	31 (798)	4'-3" (1.30 m)	38	130 (59)
	DS 24-1½ (DS 600-1½)	24 (600)	34 (870)	16 (410)	39 (990)	3'-3⅛" (995)	11'-4" (3.47 m)	6'-8½" (2.08 m)	37½ (960)	30 (762)	5'-6½" (1.7 m)	5'-9½" (1.77 m)	3¾ (100)	1⅛ (40)	50°	3.1 (2.4)	3'-8" (1.02 m)	3'-6" (1.07 m)	6'-10" (2.1 m)	14'-0" (4.18 m)	3'-6" (1.07 m)	5'-2" (1.58 m)	48	200 (90)
	DS 30-1½ (DS 750-1½)	30 (750)	39 (990)	19 (480)	3'-9" (1140)	3'-11" (1.193 m)	13'-0¾" (3.98 m)	7'-8⅛" (2.35 m)	3'-7" (1.1 m)	36 (914)	6'-5" (1.95 m)	6'-7¾" (2.03 m)	3¾ (100)	1⅛ (40)	50°	4.0 (3.1)	4'-2" (1.15 m)	4'-2" (1.26 m)	7'-11" (2.38 m)	16'-3" (4.79 m)	4'-2" (1.26 m)	5'-10" (1.78 m)	54	260 (117)
	DS 36-1½ (DS 900-1½)	36 (900)	3'-9" (1140)	22 (560)	4'-4" (1320)	4'-9⅛" (1.463 m)	15'-3" (4.64 m)	8'-10⅝" (2.7 m)	4'-1¼" (1.26 m)	3'-8" (1.119 m)	7'-6" (2.28 m)	7'-9" (2.35 m)	3¾ (100)	1¼ (40)	50°	5.3 (4.1)	4'-10" (1.32 m)	5'-0" (1.53 m)	9'-2" (2.74 m)	19'-0" (5.59 m)	5'-0" (1.53 m)	6'-8" (2.03 m)	62	340 (153)
45°	DS 15-1½ (DS 375-1½)	15 (375)	28 (720)	10 (260)	29 (740)	27 (683)	9'-6" (2.92 m)	6'-1¼" (1.88 m)	30¼ (780)	19 (483)	4'-7½" (1.42 m)	4'-10⅛" (1.5 m)	4 (100)	1¼ (30)	45°	2.1 (1.6)	36 (829)	29 (753)	6'-1" (1.89 m)	11'-6" (3.47 m)	29 (753)	4'-1" (1.25 m)	40	130 (59)
	DS 18-1½ (DS 450-1½)	18 (450)	28 (720)	13 (330)	32 (810)	31 (791)	9'-10¼" (3.03 m)	6'-1¼" (1.88 m)	30¼ (780)	22 (559)	4'-9½" (1.47 m)	5'-0¾" (1.56 m)	4 (100)	1¼ (30)	45°	2.4 (1.8)	36 (847)	34 (859)	6'-2" (1.94 m)	12'-0" (3.64 m)	34 (859)	4'-6" (1.37 m)	44	150 (68)
	DS 24-1½ (DS 600-1½)	24 (600)	34 (870)	16 (410)	39 (990)	3'-5⅛" (1.078 m)	12'-3½" (3.74 m)	7'-4⅛" (2.28 m)	36⅛ (950)	30 (762)	5'-11½" (1.83 m)	6'-3" (1.91 m)	4 (100)	1¼ (30)	45°	3.4 (2.6)	3'-8" (1.0 m)	3'-9" (1.15 m)	7'-7" (2.31 m)	15'-0" (4.47 m)	3'-9" (1.15 m)	5'-5" (1.65 m)	50	210 (95)
	DS 30-1½ (DS 750-1½)	30 (750)	39 (990)	19 (480)	3'-9" (1140)	4'-3" (1.293 m)	14'-1" (4.29 m)	8'-6" (2.59 m)	3'-6¼" (1.08 m)	36 (914)	6'-11" (2.1 m)	7'-2" (2.19 m)	4 (100)	1¼ (30)	45°	4.4 (3.4)	4'-2" (1.13 m)	4'-5" (1.36 m)	8'-8" (2.63 m)	17'-3" (5.12 m)	4'-5" (1.36 m)	6'-1" (1.86 m)	62	300 (135)
	DS 36-1½ (DS 900-1½)	36 (900)	3'-9" (1140)	22 (560)	4'-4" (1320)	5'-2⅛" (1.583 m)	16'-5¼" (5.01 m)	9'-9½" (2.98 m)	4'-0⅛" (1.24 m)	3'-8" (1.119 m)	8'-1" (2.46 m)	8'-4¼" (2.55 m)	4 (100)	1¼ (30)	45°	5.7 (4.4)	4'-10" (1.3 m)	5'-5" (1.65 m)	10'-0" (3.02 m)	20'-3" (5.97 m)	5'-5" (1.65 m)	7'-1" (2.16 m)	66	370 (167)
50°	DS 15-1½ (DS 375-1½)	15 (375)	28 (720)	10 (260)	29 (740)	29½ (751)	10'-4½" (3.18 m)	6'-10" (2.11 m)	29¾ (770)	19 (483)	5'-0½" (1.55 m)	5'-4" (1.64 m)	4¼ (110)	1 (30)	40°	2.3 (1.8)	35 (817)	32 (822)	6'-11" (2.11 m)	12'-6" (3.75 m)	32 (822)	4'-4" (1.32 m)	46	140 (63)
	DS 18-1½ (DS 450-1½)	18 (450)	28 (720)	13 (330)	32 (810)	24⅛ (870)	10'-9" (3.31 m)	6'-10" (2.11 m)	29¾ (770)	22 (559)	5'-2¾" (1.61 m)	5'-6¼" (1.7 m)	4¼ (110)	1 (30)	40°	2.6 (2.0)	36 (836)	37 (939)	6'-11" (2.16 m)	13'-0" (3.94 m)	37 (939)	4'-9" (1.45 m)	46	160 (72)
	DS 24-1½ (DS 600-1½)	24 (600)	34 (870)	16 (410)	39 (990)	3'-10⅛" (1.185 m)	13'-4¾" (4.08 m)	8'-3½" (2.55 m)	36⅛ (930)	30 (762)	6'-6⅛" (2 m)	6'-10" (2.09 m)	4¼ (110)	1 (30)	40°	3.7 (2.8)	3'-7" (990)	4'-1" (1.26 m)	8'-4" (2.58 m)	16'-0" (4.83 m)	4'-1" (1.26 m)	5'-9" (1.75 m)	56	230 (104)
	DS 30-1½ (DS 750-1½)	30 (750)	39 (990)	19 (480)	3'-9" (1140)	4'-8" (1.422 m)	15'-5" (4.7 m)	9'-6" (2.9 m)	3'-5½" (1.06 m)	36 (914)	7'-6⅛" (2.3 m)	7'-10½" (2.39 m)	4¼ (110)	1 (30)	40°	4.8 (3.7)	4'-1" (1.12 m)	4'-10" (1.49 m)	9'-7" (2.94 m)	18'-6" (5.54 m)	4'-10" (1.49 m)	6'-6" (1.98 m)	66	320 (144)
	DS 36-1½ (DS 900-1½)	36 (900)	3'-9" (1140)	22 (560)	4'-4" (1320)	5'-9⅛" (1.741 m)	18'-0¼" (5.48 m)	10'-11½" (3.34 m)	4'-0" (1.22 m)	3'-8" (1.119 m)	8'-10⅛" (2.7 m)	9'-2" (2.78 m)	4¼ (110)	1 (30)	40°	6.3 (4.8)	4'-9" (1.28 m)	5'-11" (1.81 m)	11'-1" (3.38 m)	21'-9" (6.47 m)	5'-11" (1.81 m)	7'-7" (2.31 m)	74	410 (185)
55°	DS 15-1½ (DS 375-1½)	15 (375)	28 (720)	10 (260)	29 (740)	33 (842)	11'-6¼" (3.54 m)	7'-9" (2.4 m)	29¼ (760)	19 (483)	5'-7¼" (1.72 m)	5'-11" (1.82 m)	4½ (110)	1 (30)	35°	2.6 (2.0)	35 (809)	36 (914)	7'-10" (2.4 m)	13'-9" (4.12 m)	36 (914)	4'-8" (1.42 m)	50	150 (68)
	DS 18-1½ (DS 450-1½)	18 (450)	28 (720)	13 (330)	32 (810)	38⅛ (975)	11'-11½" (3.68 m)	7'-9" (2.4 m)	29¼ (760)	22 (559)	5'-9⅛" (1.79 m)	6'-1⅛" (1.89 m)	4½ (110)	1 (30)	35°	2.9 (2.2)	36 (827)	3'-5" (1.05 m)	7'-10" (2.46 m)	14'-3" (4.33 m)	3'-5" (1.05 m)	5'-1" (1.55 m)	50	170 (77)
	DS 24-1½ (DS 600-1½)	24 (600)	34 (870)	16 (410)	39 (990)	4'-4⅛" (1.329 m)	14'-10½" (4.55 m)	9'-5" (2.9 m)	35⅛ (910)	30 (762)	7'-3⅛" (2.23 m)	7'-7⅛" (2.32 m)	4½ (110)	1 (30)	35°	4.2 (3.2)	3'-6" (978)	4'-7" (1.4 m)	9'-5" (2.94 m)	17'-6" (5.32 m)	4'-7" (1.4 m)	6'-3" (1.91 m)	62	260 (117)
	DS 30-1½ (DS 750-1½)	30 (750)	39 (990)	19 (480)	3'-9" (1140)	5'-2⅛" (1.594 m)	17'-2¼" (5.24 m)	10'-9¾" (3.3 m)	3'-5" (1.04 m)	36 (914)	8'-5¼" (2.57 m)	8'-9" (2.67 m)	4½ (110)	1 (30)	35°	5.4 (4.1)	4'-1" (1.1 m)	5'-6" (1.66 m)	10'-11" (3.33 m)	20'-6" (6.1 m)	5'-6" (1.66 m)	7'-2" (2.19 m)	74	350 (158)
	DS 36-1½ (DS 900-1½)	36 (900)	3'-9" (1140)	22 (560)	4'-4" (1320)	6'-4⅛" (1.951 m)	20'-1¼" (6.12 m)	12'-5¾" (3.79 m)	3'-11¼" (1.2 m)	3'-8" (1.119 m)	9'-10⅛" (3.01 m)	10'-2½" (3.11 m)	4½ (110)	1 (30)	35°	7.1 (5.4)	4'-9" (1.26 m)	6'-7" (2.02 m)	12'-8" (3.84 m)	24'-0" (7.12 m)	6'-7" (2.02 m)	8'-3" (2.52 m)	86	212 (470)
60°	DS 15-1½ (DS 375-1½)	15 (375)	28 (720)	10 (260)	29 (740)	38 (966)	13'-1¾" (4.03 m)	9'-0⅛" (2.78 m)	29 (750)	19 (483)	6'-4⅛" (1.96 m)	6'-8⅜" (2.07 m)	4½ (120)	0⅞ (20)	30°	2.9 (2.2)	34 (802)	3'-5" (1.04 m)	9'-0" (2.78 m)	15'-3" (4.62 m)	3'-5" (1.04 m)	5'-1" (1.55 m)	54	170 (77)
	DS 18-1½ (DS 450-1½)	18 (450)	28 (720)	13 (330)	32 (810)	3'-8" (1.118 m)	13'-7¼" (4.18 m)	9'-0⅛" (2.78 m)	29 (750)	22 (559)	6'-7½" (2.04 m)	6'-11⅜" (2.14 m)	4½ (120)	0¾ (20)	30°	3.2 (2.5)	34 (820)	3'-11" (1.19 m)	9'-0" (2.85 m)	15'-0" (4.86 m)	3'-11" (1.19 m)	5'-7" (1.70 m)	58	200 (90)
	DS 24-1½ (DS 600-1½)	24 (600)	34 (870)	16 (410)	39 (990)	5'-0" (1.524 m)	16'-11¼" (5.19 m)	10'-11⅛" (3.36 m)	35⅛ (900)	30 (762)	8'-3½" (2.04 m)	8'-7⅜" (2.65 m)	4½ (120)	0⅞ (20)	30°	4.7 (3.6)	3'-6" (969)	5'-3" (1.6 m)	11'-0" (3.41 m)	19'-9" (5.98 m)	5'-3" (1.6 m)	6'-11" (2.11 m)	72	300 (135)
	DS 30-1½ (DS 750-1½)	30 (750)	39 (990)	19 (480)	3'-9" (1140)	6'-0" (1.828 m)	19'-7¼" (5.97 m)	12'-6⅛" (3.83 m)	3'-4½" (1.03 m)	36 (914)	9'-7½" (2.93 m)	9'-11⅛" (3.04 m)	4½ (120)	0⅞ (20)	30°	6.1 (4.7)	4'-1" (1.09 m)	6'-3" (1.9 m)	12'-8" (3.87 m)	23'-0" (6.86 m)	6'-3" (1.9 m)	7'-11" (2.41 m)	82	390 (176)
	DS 36-1½ (DS 900-1½)	36 (900)	3'-9" (1140)	22 (560)	4'-4" (1320)	7'-4" (2.23 m)	22'-11¼" (6.98 m)	14'-5⅛" (4.41 m)	3'-10½" (1.18 m)	3'-8" (1.119 m)	11'-3½" (3.44 m)	11'-7⅜" (3.54 m)	4½ (119)	0¾ (20)	30°	8.1 (6.2)	4'-7" (1.25 m)	7'-7" (2.31 m)	14'-7" (4.46 m)	26'-9" (8.02 m)	7'-7" (2.31 m)	9'-3" (2.82 m)	98	530 (239)

Illinois Department of Transportation

APPROVED January 1, 2009
ENGINEER OF BRIDGES AND STRUCTURES

APPROVED January 1, 2009
ENGINEER OF DESIGN AND ENVIRONMENT

BRIDGE 1-1-97

REINFORCED CONCRETE END SECTIONS
FOR PIPE CULVERTS
15" (375 mm) THRU 36" (900 mm) DIA.
SKEWED WITH ROADWAY
(Sheet 3 of 5)

STANDARD 542201-02

WINGS FOR 1:2 SLOPE

Skew Angle	Design No.	Nominal Pipe Dia.	DIMENSIONS FOR CONCRETE A	B	C	D	E	F	G	H	I	K	M	N	α	Concrete 2 End Sections yd³ (m³)	Reinf. Bars - 2 End Sections: h - bars o	h - bars p	h - bars q	h - bars Lgth.	h1 - bars p	h1 - bars Lgth.	v-bars No.	Bars for 2 End Sections lbs. (kg)
5°	DS 15-2 (DS 375-2)	15 (375)	38 (960)	10 (260)	29 (740)	19 (485)	8'-7¾" (2.63 m)	4'-8¼" (1.42 m)	4'-3½" (1.31 m)	19 (483)	4'-3¼" (1.31 m)	4'-4" (1.32 m)	2¾ (70)	2¼ (60)	85°	1.9 (1.5)	4'-7" (1.33 m)	21 (551)	4'-11" (1.45 m)	11'-3" (3.33 m)	551 (551)	3'-5" (1.04 m)	34	110 (50)
	DS 18-2 (DS 450-2)	18 (450)	38 (960)	13 (330)	32 (810)	22 (561)	8'-10¼" (2.7 m)	4'-8¼" (1.42 m)	4'-3½" (1.31 m)	22 (559)	4'-5¼" (1.35 m)	4'-5½" (1.35 m)	2¾ (70)	2¼ (60)	85°	2.0 (1.5)	4'-7" (1.36 m)	24 (626)	4'-11" (1.48 m)	11'-6" (4.47 m)	24 (626)	3'-8" (1.12 m)	34	120 (54)
	DS 24-2 (DS 600-2)	24 (600)	3'-10" (1.16 m)	16 (410)	39 (990)	30 (765)	10'-11" (3.31 m)	5'-8" (1.72 m)	5'-2½" (1.58 m)	30 (762)	5'-5¼" (1.65 m)	5'-5¼" (1.66 m)	2¾ (70)	2¼ (60)	85°	2.9 (2.2)	5'-5" (1.62 m)	32 (832)	5'-11" (1.77 m)	14'-0" (4.22 m)	32 (832)	4'-4" (1.32 m)	42	180 (81)
	DS 30-2 (DS 750-2)	30 (750)	4'-4" (1.32 m)	19 (480)	3'-9" (1.14 m)	36 (917)	12'-5" (3.78 m)	6'-5" (1.96 m)	5'-10½" (1.79 m)	36 (914)	6'-2¼" (1.89 m)	6'-2¾" (1.89 m)	2¾ (70)	2¼ (60)	85°	3.7 (2.8)	6'-3" (1.84 m)	39 (983)	6'-9" (2.0 m)	16'-3" (4.83 m)	39 (983)	4'-11" (1.50 m)	48	230 (104)
	DS 36-2 (DS 900-2)	36 (900)	5'-0" (1.52 m)	22 (560)	4'-4" (1.32 m)	3'-8¼" (1.123 m)	14'-5" (4.39 m)	7'-4¼" (2.25 m)	6'-9¼" (2.07 m)	3'-8" (1.119 m)	7'-2¼" (2.19 m)	7'-2¾" (2.2 m)	2¾ (70)	2¼ (60)	85°	4.5 (3.4)	7'-2" (2.12 m)	3'-11" (1.19 m)	7'-8" (2.3 m)	18'-9" (5.6 m)	3'-11" (1.19 m)	5'-7" (1.70 m)	54	300 (135)
10°	DS 15-2 (DS 375-2)	15 (375)	38 (960)	10 (260)	29 (740)	19¼ (490)	8'-9" (2.65 m)	4'-11" 1.5 m)	4'-1½" (1.26 m)	19 (483)	4'-4" (1.32 m)	4'-5" (1.33 m)	2¾ (70)	2¼ (60)	80°	2.0 (1.5)	4'-4" (1.28 m)	22 (557)	5'-1" (1.52 m)	22'-3" (3.36 m)	22 (557)	3'-6" (1.07 m)	34	110 (50)
	DS 18-2 (DS 450-2)	18 (450)	38 (960)	13 (330)	32 (810)	22¼ (568)	9'-0" (2.73 m)	4'-11" (1.5 m)	4'-1½" (1.26 m)	22 (559)	4'-5¾" (1.36 m)	4'-6¼" (1.37 m)	2¾ (70)	2¼ (60)	80°	2.1 (1.6)	4'-4" (1.32 m)	25 (633)	5'-1" (1.55 m)	11'-6" (3.5 m)	25 (633)	3'-9" (1.14 m)	34	120 (54)
	DS 24-2 (DS 600-2)	24 (600)	3'-10" (1.16 m)	16 (410)	39 (990)	30½ (774)	11'-0¼" (3.34 m)	5'-11½" (1.81 m)	5'-0" (1.52 m)	30 (762)	5'-5¼" (1.66 m)	5'-6½" (1.68 m)	2¾ (70)	2¼ (60)	80°	3.0 (2.3)	5'-4" (1.57 m)	33 (841)	6'-2" (1.85 m)	14'-3" (4.26 m)	33 (841)	4'-5" (1.35 m)	42	180 (81)
	DS 30-2 (DS 750-2)	30 (750)	4'-4" (1.32 m)	19 (480)	3'-9" (1.14 m)	36½ (928)	12'-6¼" (3.82 m)	6'-9" (2.06 m)	5'-8" (1.73 m)	36 (914)	6'-3" (1.9 m)	6'-3¼" (1.92 m)	2¾ (70)	2¼ (60)	80°	3.8 (2.9)	6'-0" (1.78 m)	39 (993)	7'-0" (2.1 m)	16'-3" (4.87 m)	39 (993)	4'-11" (1.50 m)	48	230 (104)
	DS 36-2 (DS 900-2)	36 (900)	5'-0" (1.52 m)	22 (560)	4'-4" (1.32 m)	3'-8¾" (1.136 m)	14'-7" (4.44 m)	7'-9¼" (2.37 m)	6'-6¼" (1.99 m)	3'-8" (1.119 m)	7'-3" (2.21 m)	7'-4" (2.23 m)	2¾ (70)	2¼ (60)	80°	4.7 (3.6)	7'-0" (2.04 m)	3'-11" (1.2 m)	8'-1" (2.42 m)	19'-0" (5.66 m)	3'-11" (1.2 m)	5'-7" (1.70 m)	54	300 (135)
15°	DS 15-2 (DS 375-2)	15 (375)	38 (960)	10 (260)	29 (740)	19¾ (500)	8'-10¼" (2.7 m)	5'-2½" (1.58 m)	4'-0" (1.21 m)	19 (483)	4'-4¾" (1.34 m)	4'-6" (1.36 m)	3 (80)	2 (50)	75°	2.0 (1.5)	4'-3" (1.24 m)	22 (567)	5'-5" (1.6 m)	11'-6" (3.41 m)	22 (567)	3'-6" (1.07 m)	34	110 (50)
	DS 18-2 (DS 450-2)	18 (450)	38 (960)	13 (330)	32 (810)	22¾ (579)	9'-2" (2.78 m)	5'-2½" (1.58 m)	4'-0" (1.21 m)	22 (559)	4'-6½" (1.38 m)	4'-7½" (1.4 m)	3 (80)	2 (50)	75°	2.2 (1.7)	4'-3" (1.27 m)	25 (644)	5'-5" (1.64 m)	11'-9" (3.55 m)	25 (644)	3'-9" (1.14 m)	34	120 (54)
	DS 24-2 (DS 600-2)	24 (600)	3'-10" (1.16 m)	16 (410)	39 (990)	31 (789)	11'-2¼" (3.4 m)	6'-3½" (1.91 m)	4'-10" (1.47 m)	30 (762)	5'-6¼" (1.69 m)	5'-8" (1.72 m)	3 (80)	2 (50)	75°	3.1 (2.4)	5'-2" (1.52 m)	34 (857)	6'-6" (1.95 m)	14'-6" (4.32 m)	34 (857)	4'-6" (1.37 m)	42	180 (81)
	DS 30-2 (DS 750-2)	30 (750)	4'-4" (1.32 m)	19 (480)	3'-9" (1.14 m)	37¼ (946)	12'-9¼" (3.89 m)	7'-1½" (2.17 m)	5'-5½" (1.67 m)	36 (914)	6'-4" (1.93 m)	6'-5¼" (1.96 m)	3 (80)	2 (50)	75°	3.9 (3.0)	5'-10" (1.72 m)	3'-4" (1.01 m)	7'-4" (2.21 m)	16'-6" (4.94 m)	3'-4" (1.01 m)	5'-0" (1.52 m)	52	250 (113)
	DS 36-2 (DS 900-2)	36 (900)	5'-0" (1.52 m)	22 (560)	4'-4" (1.32 m)	3'-9½" (1.158)	14'-10¼" (4.52 m)	8'-2½" (2.5 m)	6'-3½" (1.92 m)	3'-8" (1.119 m)	7'-4½" (2.25 m)	7'-5¾" (2.27 m)	3 (80)	2 (50)	75°	5.0 (3.8)	6'-9" (1.97 m)	4'-0" (1.22 m)	8'-6" (2.55 m)	19'-3" (5.74 m)	4'-0" (1.22 m)	5'-8" (1.73 m)	56	310 (140)
20°	DS 15-2 (DS 375-2)	15 (375)	38 (960)	10 (260)	29 (740)	20¼ (514)	9'-1½" (2.77 m)	5'-6¼" (1.68 m)	3'-10½" (1.18 m)	19 (483)	4'-6" (1.37 m)	4'-7½" (1.4 m)	3 (80)	2 (50)	70°	2.1 (1.6)	4'-2" (1.21 m)	23 (581)	5'-8" (1.69 m)	11'-9" (3.48 m)	23 (581)	3'-7" (1.09 m)	36	110 (50)
	DS 18-2 (DS 450-2)	18 (450)	38 (960)	13 (330)	32 (810)	23½ (595)	9'-4½" (2.85 m)	5'-6¼" (1.68 m)	3'-10½" (1.18 m)	22 (559)	4'-7½" (1.41 m)	4'-9" (1.44 m)	3 (80)	2 (50)	70°	2.3 (1.8)	4'-2" (1.24 m)	26 (661)	5'-8" (1.73 m)	12'-0" (3.63 m)	26 (661)	3'-10" (1.17 m)	36	130 (59)
	DS 24-2 (DS 600-2)	24 (600)	3'-10" (1.16 m)	16 (410)	39 (990)	32 (811)	11'-6¼" (3.49 m)	6'-8¼" (2.03 m)	4'-8¼" (1.42 m)	30 (762)	5'-8½" (1.73 m)	5'-9¾" (1.76 m)	3 (80)	2 (50)	70°	3.2 (2.4)	5'-0" (1.47 m)	35 (879)	6'-10" (2.07 m)	14'-9" (4.42 m)	35 (879)	4'-7" (1.40 m)	48	200 (90)
	DS 30-2 (DS 750-2)	30 (750)	4'-4" (1.32 m)	19 (480)	3'-9" (1.14 m)	38¼ (973)	13'-1¼" (3.99 m)	7'-6¾" (2.3 m)	5'-3½" (1.61 m)	36 (914)	6'-6" (1.98 m)	6'-7¼" (2.01 m)	3 (80)	2 (50)	70°	4.1 (3.1)	5'-9" (1.67 m)	3'-5" (1.04 m)	7'-10" (2.35 m)	17'-0" (5.05 m)	3'-5" (1.04 m)	5'-1" (1.55 m)	52	250 (113)
	DS 36-2 (DS 900-2)	36 (900)	5'-0" (1.52 m)	22 (560)	4'-4" (1.32 m)	3'-10¾" (1.191 m)	15'-3" (4.64 m)	8'-8½" (2.65 m)	6'-1¼" (1.86 m)	3'-8" (1.119 m)	7'-6¾" (2.3 m)	7'-8¼" (2.34 m)	3 (80)	2 (50)	70°	5.3 (4.1)	6'-6" (1.91 m)	4'-1" (1.26 m)	8'-11" (2.7 m)	19'-6" (5.87 m)	4'-1" (1.26 m)	5'-9" (1.75 m)	58	320 (144)
25°	DS 15-2 (DS 375-2)	15 (375)	38 (960)	10 (260)	29 (740)	21 (533)	9'-5" (2.86 m)	5'-10¾" (1.79 m)	3'-9" (1.14 m)	19 (483)	4'-7½" (1.41 m)	4'-9½" (1.45 m)	3¼ (90)	1¾ (50)	65°	2.2 (1.7)	4'-1" (1.12 m)	23 (600)	6'-0" (1.8 m)	12'-0" (3.58 m)	23 (600)	3'-7" (1.09 m)	38	120 (54)
	DS 18-2 (DS 450-2)	18 (450)	38 (960)	13 (330)	32 (810)	24¼ (617)	9'-8½" (2.95 m)	5'-10¾" (1.79 m)	3'-9" (1.14 m)	22 (559)	4'-9¼" (1.45 m)	4'-11¼" (1.5 m)	3¼ (90)	1¾ (50)	65°	2.4 (1.8)	4'-0" (1.2 m)	27 (683)	6'-0" (1.85 m)	12'-3" (3.73 m)	27 (683)	3'-11" (1.19 m)	42	140 (63)
	DS 24-2 (DS 600-2)	24 (600)	3'-10" (1.16 m)	16 (410)	39 (990)	33 (841)	11'-11" (3.61 m)	7'-1½" (2.16 m)	4'-6½" (1.38 m)	30 (762)	5'-10½" (1.78 m)	6'-0½" (1.83 m)	3¼ (90)	1¾ (50)	65°	3.4 (2.6)	4'-11" (1.43 m)	35 (909)	7'-4" (2.2 m)	15'-3" (4.55 m)	35 (909)	4'-7" (1.40 m)	48	200 (90)
	DS 30-2 (DS 750-2)	30 (750)	4'-4" (1.32 m)	19 (480)	3'-9" (1.14 m)	3'-3¾" (1.008 m)	13'-6¾" (4.13 m)	8'-0¾" (2.46 m)	5'-1¾" (1.57 m)	36 (914)	6'-8½" (2.04 m)	6'-10¼" (2.09 m)	3¼ (90)	1¾ (50)	65°	4.3 (3.3)	5'-6" (1.62 m)	3'-6" (1.08 m)	8'-3" (2.5 m)	17'-3" (5.2 m)	3'-6" (1.08 m)	5'-2" (1.58 m)	52	250 (113)
	DS 36-2 (DS 900-2)	36 (900)	5'-0" (1.52 m)	22 (560)	4'-4" (1.32 m)	4'-0½" (1.235 m)	15'-9¾" (4.8 m)	9'-3¼" (2.83 m)	5'-11¼" (1.81 m)	3'-8" (1.119 m)	7'-9¾" (2.38 m)	7'-11½" (2.42 m)	3¼ (90)	1¾ (50)	65°	5.6 (4.3)	6'-5" (1.86 m)	4'-3" (1.3 m)	9'-7" (2.88 m)	20'-3" (6.04 m)	4'-3" (1.3 m)	5'-11" (1.80 m)	60	330 (149)
30°	DS 15-2 (DS 375-2)	15 (375)	38 (960)	10 (260)	29 (740)	22 (558)	9'-9¼" (2.98 m)	6'-4" (1.92 m)	3'-8" (1.11 m)	19 (483)	4'-9¼" (1.46 m)	5'-0" (1.52 m)	3½ (90)	1½ (40)	60°	2.3 (1.8)	4'-0" (1.15 m)	24 (626)	6'-6" (1.93 m)	12'-6" (3.71 m)	24 (626)	3'-8" (1.12 m)	42	130 (59)
	DS 18-2 (DS 450-2)	18 (450)	38 (960)	13 (330)	32 (810)	25½ (645)	10'-1½" (3.07 m)	6'-4" (1.92 m)	3'-8" (1.11 m)	22 (559)	4'-11½" (1.51 m)	5'-2" (1.56 m)	3½ (90)	1½ (40)	60°	2.5 (1.9)	4'-0" (1.18 m)	28 (712)	6'-5" (1.98 m)	3.87 m (12'-9")	28 (712)	4'-0" (1.22 m)	42	150 (68)
	DS 24-2 (DS 600-2)	24 (600)	3'-10" (1.16 m)	16 (410)	39 (990)	34¾ (880)	12'-5" (3.77 m)	7'-8" (2.32 m)	4'-5" (1.34 m)	30 (762)	6'-1½" (1.86 m)	6'-3½" (1.91 m)	3½ (90)	1½ (40)	60°	3.6 (2.8)	4'-10" (1.4 m)	37 (949)	7'-10" (2.37 m)	4.71 m (15'-9")	37 (949)	4'-9" (1.45 m)	52	210 (95)
	DS 30-2 (DS 750-2)	30 (750)	4'-4" (1.32 m)	19 (480)	3'-9" (1.14 m)	3'-5½" (1.055 m)	14'-1¾" (4.31 m)	8'-8" (2.64 m)	5'-0" (1.53 m)	36 (914)	6'-11¾" (2.13 m)	7'-2" (2.18 m)	3½ (90)	1½ (40)	60°	4.5 (3.4)	5'-6" (1.58 m)	3'-8" (1.12 m)	8'-10" (2.69 m)	5.39 m (18'-0")	3'-8" (1.12 m)	5'-4" (1.63 m)	56	270 (122)
	DS 36-2 (DS 900-2)	36 (900)	5'-0" (1.52 m)	22 (560)	4'-4" (1.32 m)	4'-2¾" (1.292 m)	16'-5½" (5.01 m)	10'-0" (3.04 m)	5'-9¼" (1.76 m)	3'-8" (1.119 m)	8'1¾" (2.48 m)	8'-3¾" (2.53 m)	3½ (90)	1½ (40)	60°	5.9 (4.5)	6'-4" (1.82 m)	4'-5" (1.36 m)	10'-3" (3.09 m)	6.26 m (21'-0")	4'-5" (1.36 m)	6'-1" (1.86 m)	66	360 (162)

Illinois Department of Transportation

APPROVED January 1, 2009
Ralph E. Anderson
ENGINEER OF BRIDGES AND STRUCTURES

APPROVED January 1 2009
ENGINEER OF DESIGN AND ENVIRONMENT

ISSUED 1-1-97

REINFORCED CONCRETE END SECTIONS FOR PIPE CULVERTS 15" (375 mm) THRU 36" (900 mm) DIA. SKEWED WITH ROADWAY

(Sheet 4 of 5)

STANDARD 542201-02

WINGS FOR 1:2 SLOPE

Skew Angle	Design No.	Nominal Pipe Dia.	DIMENSIONS FOR CONCRETE													Concrete 2 End Sections yd^3 (m^3)	Reinf. Bars - 2 End Sections							Bars for 2 End Sections lbs. (kg)
			A	B	C	D	E	F	G	H	J	K	M	N	α		h - bars				h1 - bars		v-bars No.	
																	o	p	q	Lgth.	p	Lgth.		
35°	DS 15-2 (DS 375-2)	15 (375)	38 (960)	10 (260)	29 (740)	23¼ (590)	10'-4" (3.14 m)	6'-10¼" (2.08 m)	3'-6¾" (1.08 m)	19 (485)	5'-0¾" (1.54 m)	5'-3¼" (1.6 m)	3¾ (90)	1½ (40)	55°	2.4 (1.8)	3'-11" (1.13 m)	26 (658)	6'-11" (2.09 m)	13'-0" (3.87 m)	26 (658)	3'-10" (1.17 m)	44	140 (63)
	DS 18-2 (DS 450-2)	18 (450)	38 (960)	13 (330)	32 (810)	27 (683)	10'-7¾" (3.23 m)	6'-10¼" (2.08 m)	3'-6¾" (1.09 m)	22 (559)	5'-2½" (1.58 m)	5'-5¼" (1.65 m)	3¾ (90)	1½ (40)	55°	2.6 (2.0)	3'-11" (1.15 m)	29 (750)	6'-11" (2.14 m)	13'-3" (4.04 m)	29 (750)	4'-1" (1.25 m)	44	150 (68)
	DS 24-2 (DS 600-2)	24 (600)	3'-10" (1.16 m)	16 (410)	39 (990)	36½ (930)	13'-1" (3.97 m)	8'-3½" (2.52 m)	4'-3¾" (1.31 m)	30 (762)	6'-5¼" (1.95 m)	6'-7¾" (2.02 m)	3¾ (90)	1½ (40)	55°	3.8 (2.9)	4'-8" (1.37 m)	39 (1.0 m)	8'-4" (2.56 m)	16'-3" (4.93 m)	39 (1.0 m)	4'-11" (1.50 m)	52	220 (99)
	DS 30-2 (DS 750-2)	30 (750)	4'-4" (1.32 m)	19 (480)	3'-9" (1.14 m)	3'-8" (1.116 m)	14'-11" (4.54 m)	9'-4½" (2.86 m)	4'-10½" (1.49 m)	36 (914)	7'-4¼" (2.24 m)	7'-6¼" (2.3 m)	3¾ (90)	1½ (40)	55°	4.8 (3.7)	5'-4" (1.55 m)	3'-11" (1.18 m)	9'-6" (2.9 m)	18'-9" (5.64 m)	3'-11" (1.18 m)	5'-7" (1.70 m)	60	290 (131)
	DS 36-2 (DS 900-2)	36 (900)	5'-0" (1.52 m)	22 (560)	4'-4" (1.32 m)	4'-5[illegible]" (1.366 m)	17'-4¼" (5.28 m)	10'-10" (3.29 m)	5'-7¾" (1.72 m)	3'-8" (1.119 m)	8'-6¾" (2.61 m)	8'-9½" (2.67 m)	3¾ (90)	1½ (40)	55°	6.3 (4.8)	6'-1" (1.78 m)	4'-8" (1.43 m)	11'-0" (3.34 m)	21'-9" (6.55 m)	4'-8" (1.43 m)	6'-4" (1.93 m)	70	380 (171)
40°	DS 15-2 (DS 375-2)	15 (375)	38 (960)	10 (260)	29 (740)	34[illegible] (631)	11'-0" (3.34 m)	7'-6" (2.27 m)	3'-6" (1.06 m)	19 (485)	5'-4½" (1.63 m)	5'-7½" (1.71 m)	3¾ (100)	1¼ (40)	50°	2.6 (2.0)	3'-10" (1.1 m	28 (700)	7'-7" (2.28 m)	13'-9" (4.08 m)	28 (700)	3'-11" (1.19 m)	48	150 (68)
	DS 18-2 (DS 450-2)	18 (450)	38 (960)	13 (330)	32 (810)	28[illegible] (730)	11'-4" (3.44 m)	7'-6" (2.27 m)	3'-6" (1.08 m)	22 (559)	5'-6½" (1.68 m)	5'-9½" (1.76 m)	3¾ (100)	1¼ (40)	50°	2.8 (2.1)	3'-10" (1.13 m)	31 (798)	7'-7" (2.34 m)	14'-0" (4.26 m)	31 (798)	4'-3" (1.30 m)	48	160 (72)
	DS 24-2 (DS 600-2)	24 (600)	3'-10" (1.16 m)	16 (410)	39 (990)	3'-3¼" (995)	13'-11¼" (4.23 m)	9'-0¾" (2.75 m)	4'-2¾" (1.28 m)	30 (762)	6'-10¼" (2.08 m)	7'-1" (2.15 m)	3¾ (100)	1¼ (40)	50°	4.1 (3.1)	4'-7" (1.34 m)	3'-6" (1.07 m)	9'-2" (2.79 m)	17'-3" (5.2 m)	3'-6" (1.07 m)	5'-2" (1.58 m)	58	240 (108)
	DS 30-2 (DS 750-2)	30 (750)	4'-4" (1.32 m)	19 (480)	3'-9" (1.14 m)	3'-11" (1.193 m)	15'-10¾" (4.84 m)	10'-3" (3.12 m)	4'-9½" (1.46 m)	36 (914)	7'-10" (2.38 m)	8'-0¾" (2.46 m)	3¾ (100)	1¼ (40)	50°	5.2 (4.0)	5'-3" (1.52 m)	4'-2" (1.26 m)	10'-4" (3.17 m)	19'-9" (5.95 m)	4'-2" (1.26 m)	5'-10" (1.78 m)	64	310 (140)
	DS 36-2 (DS 900-2)	36 (900)	5'-0" (1.52 m)	22 (560)	4'-4" (1.32 m)	4'-9[illegible]" (1.461 m)	18'-6" (5.63 m)	11'-10" (3.6 m)	5'-6¼" (1.68 m)	3'-8" (1.119 m)	9'-1½" (2.78 m)	9'-4½" (2.85 m)	3¾ (100)	1¼ (40)	50°	6.8 (5.2)	6'-0" (1.74 m)	5'-0" (1.53 m)	12'-0" (3.65 m)	23'-0" (6.92 m)	5'-0" (1.53 m)	6'-3" (2.03 m)	78	420 (189)
45°	DS 15-2 (DS 375-2)	15 (375)	38 (960)	10 (260)	29 (740)	27 (683)	11'-10¼" (3.6 m)	8'-3¾" (2.51 m)	3'-5¼" (1.04 m)	19 (485)	5'-9½" (1.76 m)	6'-0¼" (1.84 m)	4 (100)	1¼ (30)	45°	2.8 (2.1)	3'-9" (1.09 m)	29 (753)	8'-4" (2.51 m)	14'-6" (4.35 m)	29 (753)	4'-1" (1.25 m)	48	150 (68)
	DS 18-2 (DS 450-2)	18 (450)	38 (960)	13 (330)	32 (810)	31 (791)	12'-2½" (3.7 m)	8'-3¼" (2.51 m)	3'-5¼" (1.04 m)	22 (559)	5'-11½" (1.81 m)	6'-3" (1.89 m)	4 (100)	1¼ (30)	45°	3.1 (2.4)	3'-10" (1.11 m)	34 (859)	8'-4" (2.58 m)	15'-0" (4.55 m)	34 (859)	4'-6" (1.37 m)	52	180 (81)
	DS 24-2 (DS 600-2)	24 (600)	3'-10" (1.16 m)	16 (410)	39 (990)	3'-6[illegible]" (1.078 m)	15'-0¼" (4.56 m)	10'-0¼" (3.03 m)	4'-1¼" (1.26 m)	30 (762)	7'-4½" (2.24 m)	7'-7¼" (2.32 m)	4 (100)	1¼ (30)	45°	4.4 (3.4)	4'-6" (1.32 m)	3'-9" (1.15 m)	10'-0" (3.08 m)	18'-3" (5.55 m)	3'-9" (1.15 m)	5'-5" (1.65 m)	60	250 (113)
	DS 30-2 (DS 750-2)	30 (750)	4'-4" (1.32 m)	19 (480)	3'-9" (1.14 m)	4'-3" (1.293 m)	17'-1¾" (5.23 m)	11'-4" (3.45 m)	4'-8¼" (1.43 m)	36 (914)	8'-5¼" (2.57 m)	8'-8½" (2.66 m)	4 (100)	1¼ (30)	45°	5.6 (4.3)	5'-2" (1.49 m)	4'-5" (1.36 m)	11'-5" (3.5 m)	21'-0" (6.35 m)	4'-5" (1.36 m)	6'-1" (1.85 m)	72	340 (153)
	DS 36-2 (DS 900-2)	36 (900)	5'-0" (1.52 m)	22 (560)	4'-4" (1.32 m)	5'-2[illegible]" (1.583 m)	19'-11¼" (6.08 m)	13'-0¼" (3.97 m)	5'-5" (1.65 m)	3'-8" (1.119 m)	9'-10¼" (3.0 m)	10'-1½" (3.08 m)	4 (100)	1¼ (30)	45°	7.4 (5.7)	5'-11" (1.71 m)	5'-5" (1.65 m)	13'-2" (4.02 m)	24'-6" (7.39 m)	5'-5" (1.65 m)	7'-1" (2.16 m)	82	450 (203)
50°	DS 15-2 (DS 375-2)	15 (375)	38 (960)	10 (260)	29 (740)	29½ (751)	12'-11½" (3.93 m)	9'-3" (2.81 m)	3'-4½" (1.03 m)	19 (485)	6'-4" (1.92 m)	6'-7½" (2.01 m)	4¼ (110)	1 (30)	40°	3.1 (2.4)	3'-9" (1.07 m)	32 (822)	9'-4" (2.81 m)	15'-9" (4.7 m)	32 (822)	4'-4" (1.32 m)	54	170 (77)
	DS 18-2 (DS 450-2)	18 (450)	38 (960)	13 (330)	32 (810)	34¼ (870)	13'-4¼" (4.05 m)	9'-3" (2.81 m)	3'-4½" (1.03 m)	22 (559)	6'-6¼" (1.98 m)	6'-10" (2.07 m)	4¼ (110)	1 (30)	40°	3.4 (2.6)	3'-8" (1.1 m)	37 (939)	9'-3" (2.88 m)	16'-0" (4.92 m)	37 (939)	4'-9" (1.45 m)	54	190 (86)
	DS 24-2 (DS 600-2)	24 (600)	3'-10" (1.16 m)	16 (410)	39 (990)	3'-10[illegible]" (1.185 m)	16'-5½" (4.99 m)	11'-2½" (3.39 m)	4'-1" (1.24 m)	30 (762)	8'-1" (2.45 m)	8'-4½" (2.54 m)	4¼ (110)	1 (30)	40°	4.8 (3.7)	4'-6" (1.3 m	4'-1" (1.26 m)	11'-2" (3.44 m)	19'-9" (6.0 m)	4'-1" (1.26 m)	5'-9" (1.75 m)	68	280 (126)
	DS 30-2 (DS 750-2)	30 (750)	4'-4" (1.32 m)	19 (480)	3'-9" (1.14 m)	4'-8" (1.422 m)	18'-9½" (5.72 m)	12'-8" (3.86 m)	4'-7¼" (1.41 m)	36 (914)	9'-3" (2.82 m)	9'-6½" (2.92 m)	4¼ (110)	1 (30)	40°	6.2 (4.7)	5'-1" (1.47 m)	4'-10" (1.49 m)	12'-9" (3.91 m)	22'-9" (6.87 m)	4'-10" (1.49 m)	6'-6" (1.98 m)	78	370 (167)
	DS 36-2 (DS 900-2)	36 (900)	5'-0" (1.52 m)	22 (560)	4'-4" (1.32 m)	5'-8[illegible]" (1.741 m)	21'-10¾" (6.67 m)	14'-7½" (4.45 m)	5'-3¾" (1.62 m)	3'-8" (1.119 m)	10'-9½" (3.29 m)	11'-1¼" (3.38 m)	4¼ (110)	1 (30)	40°	8.1 (6.2)	5'-10" (1.69 m)	5'-11" (1.81 m)	14'-9" (4.5 m)	26'-6" (8.0 m)	5'-11" (1.81 m)	7'-7" (2.31 m)	90	490 (221)
55°	DS 15-2 (DS 375-2)	15 (375)	38 (960)	10 (260)	29 (740)	33 (842)	14'-5" (4.38 m)	10'-6¼" (3.2 m)	3'-4" (1.01 m)	19 (485)	7'-0½" (2.14 m)	7'-4½" (2.24 m)	4½ (110)	1 (30)	35°	3.4 (2.6)	3'-8" (1.06 m)	36 (914)	10'-7" (3.18 m)	17'-3" (5.17 m)	36 (914)	4'-8" (1.42 m)	60	180 (81)
	DS 18-2 (DS 450-2)	18 (450)	38 (960)	13 (330)	32 (810)	38[illegible] (975)	14'-10¼" (14'-10¼")	10'-6¼" (3.2 m)	3'-4" (1.01 m)	22 (559)	7'-3¼" (2.21 m)	7'-7" (2.3 m)	4½ (110)	1 (30)	35°	3.7 (2.8)	3'-9" (1.08 m)	3'-5" (1.05 m)	10'-7" (3.27 m)	17'-9" (5.4 m)	3'-5" (1.05 m)	5'-1" (1.55 m)	60	210 (95)
	DS 24-2 (DS 600-2)	24 (600)	3'-10" (1.16 m)	16 (410)	39 (990)	4'-4¼" (1.329 m)	14'-10¼" (5.56 m)	12'-9" (3.86 m)	4'-0¼" (1.22 m)	30 (762)	9'-0¼" (2.73 m)	9'-4" (2.83 m)	4½ (110)	1 (30)	35°	5.4 (4.1)	4'-5" (1.29 m)	4'-7" (1.4 m)	12'-9" (3.91 m)	21'-9" (6.6 m)	4'-7" (1.4 m)	6'-3" (1.91 m)	74	300 (135)
	DS 30-2 (DS 750-2)	30 (750)	4'-4" (1.32 m)	19 (480)	3'-9" (1.14 m)	5'-2¼" (1.594 m)	20'-11½" (6.39 m)	14'-5" (4.39 m)	4'-6½" (1.39 m)	36 (914)	10'-3¾" (3.15 m)	10'-7¾" (3.24 m)	4½ (110)	1 (30)	35°	6.9 (5.3)	5'-1" (1.45 m)	5'-6" (1.66 m)	14'-6" (4.44 m)	25'-0" (7.56 m)	5'-6" (1.66 m)	7'-2" (2.19 m)	88	420 (189)
	DS 36-2 (DS 900-2)	36 (900)	5'-0" (1.52 m)	22 (560)	4'-4" (1.32 m)	6'-4¼" (1.951 m)	24'-5¼" (7.44 m)	16'-7½" (5.06 m)	5'-3" (1.61 m)	3'-8" (1.119 m)	12'-0¼" (3.67 m)	12'-4¼" (3.77 m)	4½ (110)	1 (30)	35°	9.1 (7.0)	5'-10" (1.67 m)	6'-7" (2.02 m)	16'-7" (5.11 m)	29'-0" (8.8 m)	6'-7" (2.02 m)	8'-3" (2.52 m)	102	550 (248)
60°	DS 15-2 (DS 375-2)	15 (375)	38 (960)	10 (260)	29 (740)	38 (966)	16'-5¼" (4.99 m)	12'-2¼" (3.71 m)	3'-3¼" (1.0 m)	19 (485)	8'-0½" (2.44 m)	8'-4¼" (2.55 m)	4½ (120)	0¾ (20)	30°	3.9 (3.0)	3'-8" (1.05 m)	3'-5" (1.04 m)	12'-2" (3.7 m)	19'-3" (5.79 m)	3'-5" (1.04 m)	5'-1" (1.55 m)	64	200 (90)
	DS 18-2 (DS 450-2)	18 (450)	38 (960)	13 (330)	32 (810)	3'-8" (1.118 m)	16'-11¼" (5.15 m)	12'-2¾" (3.71 m)	3'-3¼" (1.0 m)	22 (559)	8'-3½" (2.52 m)	8'-7¾" (2.63 m)	4½ (120)	0¾ (20)	30°	4.2 (3.2)	3'-8" (1.07 m)	3'-11" (1.19 m)	12'-2" (3.8 m)	19'-9" (6.06 m)	3'-11" (1.19 m)	5'-7" (1.70 m)	70	240 (108)
	DS 24-2 (DS 600-2)	24 (600)	3'-10" (1.16 m)	16 (410)	39 (990)	5'-0" (1.524 m)	20'-11¼" (6.35 m)	14'-9¼" (4.48 m)	3'-11¼" (1.2 m)	30 (762)	10'-3½" (3.12 m)	10'-7¼" (3.23 m)	4½ (120)	0¾ (20)	30°	6.1 (4.7)	4'-5" (1.27 m)	5'-3" (1.6 m)	14'-10" (4.54 m)	24'-6" (7.41 m)	5'-3" (1.6 m)	6'-11" (2.11 m)	86	350 (158)
	DS 30-2 (DS 750-2)	30 (750)	4'-4" (1.32 m)	19 (480)	3'-9" (1.14 m)	6'-0" (1.828 m)	23'-11¼" (7.29 m)	16'-9" (5.1 m)	4'-5¼" (1.37 m)	36 (914)	11'-9½" (3.59 m)	12'-1¼" (3.7 m)	4½ (120)	0¾ (20)	30°	7.9 (6.0)	5'-0" (1.44 m)	6'-3" (1.9 m)	16'-9" (5.16 m)	28'-0" (8.5 m)	6'-3" (1.9 m)	7'-11" (2.41 m)	100	470 (212)
	DS 36-2 (DS 900-2)	36 (900)	5'-0" (1.52 m)	22 (560)	4'-4" (1.32 m)	7'-4" (2.238 m)	27'-11¼" (8.51 m)	19'-3¼" (5.88 m)	5'-2" (1.57 m)	3'-8" (1.119 m)	13'-9½" (4.2 m)	14'-1¾" (4.31 m)	4½ (120)	0¾ (20)	30°	10.4 (8.0)	5'-10" (1.65 m)	7'-7" (2.31 m)	19'-4" (5.94 m)	32'-9" (9.89 m)	7'-7" (2.31 m)	9'-3" (2.82 m)	114	620 (279)

Illinois Department of Transportation

APPROVED January 1, 2005
Ralph E. Anderson
ENGINEER OF BRIDGES AND STRUCTURES

APPROVED January 1, 2005
Eric E. Harm
ENGINEER OF DESIGN AND ENVIRONMENT

ISSUED 1-1-97

REINFORCED CONCRETE END SECTIONS FOR PIPE CULVERTS 15" (375 mm) THRU 36" (900 mm) DIA. SKEWED WITH ROADWAY

(Sheet 5 of 5)

STANDARD 542201-02

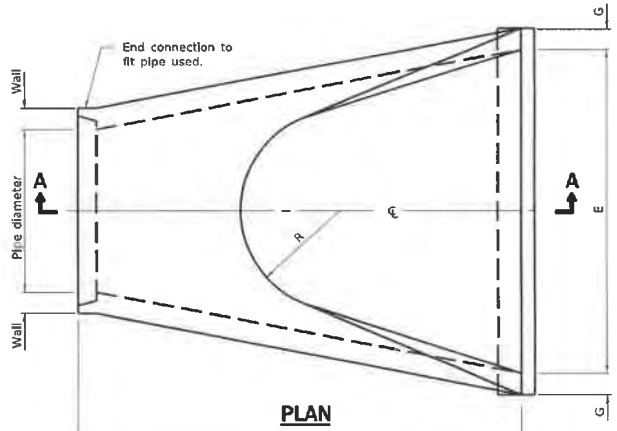

PLAN

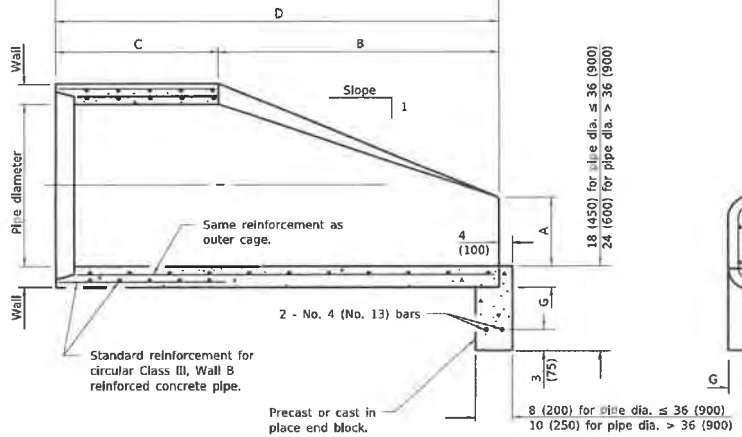

SECTION A-A

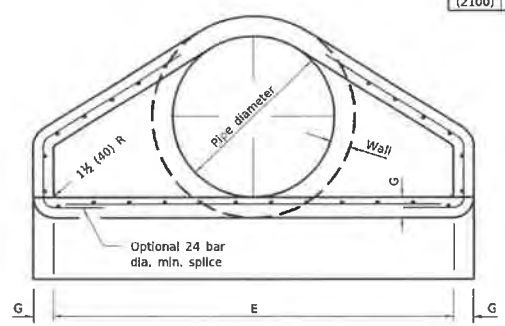

END VIEW

PIPE DIA.	APPROX. QTY. lbs. (kg)	WALL	A	B	C	D	E	G	R	APPROX. SLOPE
12 (300)	530 (240)	2 (51)	4 (102)	24 (610)	4'-0⅞" (1.241 m)	6'-0⅞" (1.851 m)	24 (610)	2 (51)	9 (229)	1:2.4
15 (375)	740 (335)	2¼ (57)	6 (152)	27 (686)	3'-10" (1.168 m)	6'-1" (1.854 m)	30 (762)	2¼ (57)	11 (280)	1:2.4
18 (450)	990 (450)	2½ (64)	9 (229)	27 (686)	3'-10" (1.168 m)	6'-1" (1.854 m)	36 (914)	2½ (64)	12 (305)	1:2.4
21 (525)	1280 (580)	2¾ (70)	9 (229)	35 (889)	38 (965)	6'-1" (1.854 m)	3'-6" (1.067 m)	2¾ (70)	13 (330)	1:2.4
24 (600)	1520 (690)	3 (76)	9½ (241)	3'-7½" (1.105 m)	30 (762)	6'-1½" (1.867 m)	4'-0" (1.219 m)	3 (76)	14 (356)	1:2.5
27 (675)	1930 (875)	3¼ (83)	10½ (267)	4'-0" (1.219 m)	25½ (648)	6'-1½" (1.867 m)	4'-6" (1.372 m)	3¼ (83)	14½ (368)	1:2.4
30 (750)	2190 (995)	3½ (89)	12 (305)	4'-6" (1.375 m)	19¾ (502)	6'-1¾" (1.874 m)	5'-0" (1.524 m)	3½ (89)	15 (381)	1:2.5
33 (825)	3200 (1450)	3¾ (95)	13½ (343)	4'-10½" (1.486 m)	39¼ (997)	8'-1¾" (2.483 m)	5'-6" (1.676 m)	3¾ (95)	17½ (445)	1:2.5
36 (900)	4100 (1860)	4 (102)	15 (381)	5'-3" (1.6 m)	34¾ (883)	8'-1¾" (2.483 m)	6'-0" (1.829 m)	4 (102)	20 (508)	1:2.5
42 (1050)	5380 (2440)	4½ (114)	21 (533)	5'-3" (1.6 m)	35 (889)	8'-2" (2.489 m)	6'-6" (1.981 m)	4½ (114)	22 (559)	1:2.5
48 (1200)	6550 (2970)	5 (127)	24 (610)	6'-0" (1.829 m)	26 (660)	8'-2" (2.489 m)	7'-0" (2.134 m)	5 (127)	22 (559)	1:2.5
54 (1350)	8240 (3740)	5½ (140)	27 (686)	5'-5" (1.651 m)	35 (889)	8'-4" (2.54 m)	7'-6" (2.286 m)	5½ (140)	24 (610)	1:2.0
60 (1500)	8730 (3960)	6 (152)	35 (889)	5'-0" (1.524 m)	39 (991)	8'-3" (2.515 m)	8'-0" (2.438 m)	5 (127)	*	1:1.9
66 (1650)	10710 (4860)	6½ (165)	30 (762)	6'-0" (1.829 m)	27 (686)	8'-3" (2.515 m)	8'-6" (2.591 m)	5½ (140)	*	1:1.7
72 (1800)	12520 (5680)	7 (178)	36 (914)	6'-6" (1.981 m)	21 (533)	8'-3" (2.514 m)	9'-0" (2.743 m)	6 (152	*	1:1.8
78 (1950)	14770 (6700)	7½ (191)	36 (914)	7'-6" (2.286 m)	21 (533)	9'-3" (2.819 m)	9'-6" (2.896 m)	6½ (165)	*	1:1.8
84 (2100)	18160 (8240)	8 (203)	36 (914)	7'-6½" (2.299 m)	21 (533)	9'-3½" (2.832 m)	10'-0" (3.048 m)	6½ (165)	*	1:1.6

* Radius as furnished by manufacturer

GENERAL NOTES

All slope ratios are expressed as units of vertical displacement to units of horizontal displacement (V:H).

All dimensions are in inches (millimeters) unless otherwise shown.

Illinois Department of Transportation

APPROVED January 1, 2011
ENGINEER OF BRIDGES AND STRUCTURES

APPROVED January 1, 2011
ENGINEER OF DESIGN AND ENVIRONMENT

ISSUED 1-1-97

DATE	REVISIONS
1-1-11	Clarified ref. to pipe dia.
	on Section A-A. Changed
	'inner' to 'outer' cage ref.
1-1-09	Switched units to
	English (metric).

PRECAST REINFORCED CONCRETE FLARED END SECTION

STANDARD 542301-03

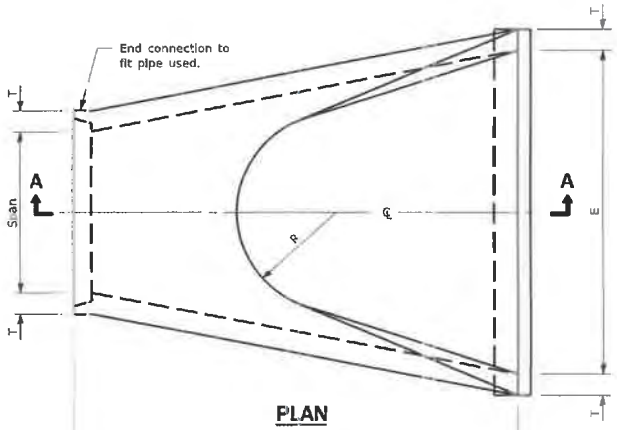

PLAN

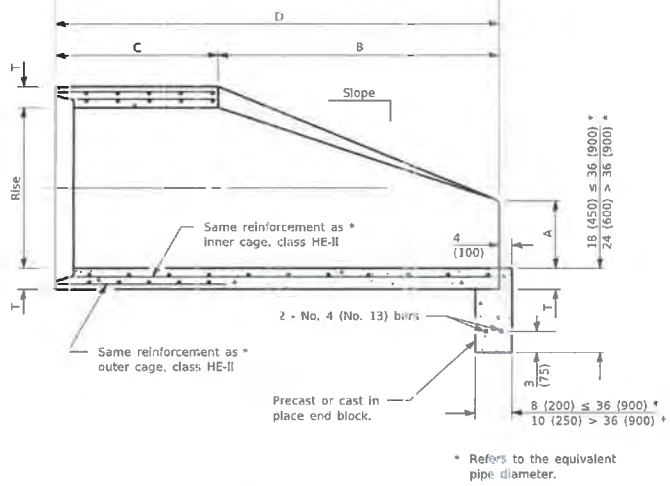

* Refers to the equivalent pipe diameter.

SECTION A-A

SPAN	RISE	EQUIV. DIA.	WALL T	A	B	C	D	E	H	R	R_1	R_2	APPROX. SLOPE
23 (584)	14 (356)	18 (450)	2¾ (70)	8 (203)	27 (686)	3'-9" 1.143 m)	6'-0" (1.829 m)	36 (914)	5⅜ (137)	6 (152)	6 (152)	20 (508)	1:3.1
30 (762)	19 (483)	24 (600)	3¼ (83)	8½ (216)	39 (991)	33 (838)	6'-0" (1.829 m)	4'-0" (1.219 m)	6⅞ (175)	7 (178)	8¼ (210)	26¼ (667)	1:2.8
34 (864)	22 (559)	27 (675)	3½ (89)	9 (229)	4'-0" (1.219 m)	24 (610)	6'-0" (1.829 m)	4'-6" (1.372 m)	7¾ (197)	8 (203)	9¼ (235)	29¼ (743)	1:2.9
38 (965)	24 (610)	30 (750)	3½ (95)	9½ (241)	4'-6" (1.372 m)	18 (475)	6'-0" (1.829 m)	5'-0" (1.524 m)	8⅝ (219)	9 (229)	10¼ (260)	32¾ (832)	1:2.9
45 (1143)	29 (737)	36 (900)	4½ (114)	11¼ (286)	5'-0" (1.524 m)	36 (914)	8'-0" (2.438 m)	6'-0" (1.829 m)	10½ (267)	12 (305)	12¼ (311)	39¼ (997)	1:2.7
53 (1346)	34 (864)	42 (1050)	5 (127)	15¾ (400)	5'-0" (1.524 m)	36 (914)	8'-0" (2.438 m)	6'-6" (1.981 m)	12⅛ (308)	13 (330)	14½ (368)	3'-10" (1.168 m)	1:2.6
60 (1524)	38 (965)	48 (1200)	5½ (140)	21 (533)	5'-0" (1.524 m)	36 (914)	8'-0" (2.438 m)	7'-0" (2.134 m)	13½ (343)	14 (356)	16½ (419)	4'-3½" (1.308 m)	1:2.7
68 (1727)	43 (1092)	54 (1350)	6 (152)	26 (660)	5'-0" (1.524 m)	36 (914)	8'-0" (2.438 m)	7'-6" (2.286 m)	15¼ (387)	16 (406)	18¾ (476)	4'-10½" (1.486 m)	1:2.6
76 (1930)	48 (1219)	60 (1500)	6½ (165)	31 (787)	5'-0" (1.524 m)	36 (914)	8'-0" (2.438 m)	8'-0" (2.439 m)	17 (432)	18 (457)	20¾ (527)	5'-5" (1.651 m)	1:2.6

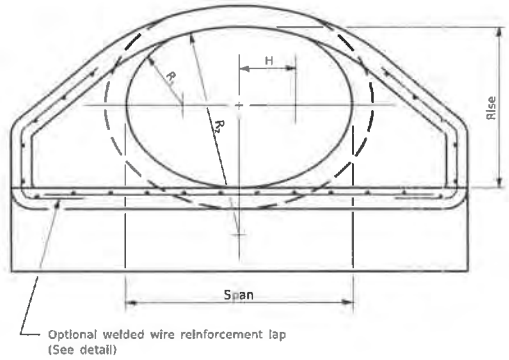

END VIEW

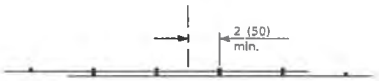

OPTIONAL WELDED WIRE REINFORCEMENT LAP

GENERAL NOTES

All slope ratios are expressed as units of vertical displacement to units of horizontal displacement (V:H).

All dimensions are in inches (millimeters) unless otherwise shown.

Illinois Department of Transportation

APPROVED _____ April 1, 2016
ENGINEER OF BRIDGES AND STRUCTURES

APPROVED _____ April 1, 2016
ENGINEER OF DESIGN AND ENVIRONMENT

ISSUED 1-1-07

DATE	REVISIONS
4-1-16	Changed terminology to
	'welded wire reinforcement'.
	Corrected min. lap dimension.
1-1-09	Switched units to
	English (metric).

PRECAST REINFORCED CONCRETE ELLIPTICAL FLARED END SECTION

STANDARD 542306-03

PIPE DIA.	THICK-NESS	DIMENSIONS A 1± (25)	B (max.)	H 1± (25)	L 1½± (38)	W 2± (50)	SLOPE (Approx.) (V:H)	BODY
12 (300)	0.064 (1.63)	6 (150)	6 (150)	6 (150)	21 (535)	24 (610)	1:2½	1 Pc.
15 (375)	0.064 (1.63)	7 (180)	8 (205)	6 (150)	26 (660)	30 (760)	1:2½	1 Pc.
18 (450)	0.064 (1.63)	8 (205)	10 (255)	6 (150)	31 (785)	36 (915)	1:2½	1 Pc.
21 (525)	0.064 (1.63)	9 (230)	12 (305)	6 (150)	36 (915)	42 (1.065 m)	1:2½	1 Pc.
24 (600)	0.064 (1.63)	10 (255)	13 (330)	6 (150)	41 (1.040 m)	48 (1.220 m)	1:2½	1 Pc.
30 (750)	0.079 (2.01)	12 (305)	16 (405)	8 (205)	51 (1.295 m)	60 (1.525 m)	1:2½	1 Pc.
36 (900)	0.079 (2.01)	14 (355)	19 (480)	9 (230)	60 (1.525 m)	72 (1.830 m)	1:2½	2 Pc.
42 (1050)	0.109 (2.77)	16 (405)	22 (560)	11 (280)	69 (1.750 m)	84 (2.135 m)	1:2½	2 Pc.
48 (1200)	0.109 (2.77)	18 (455)	27 (685)	12 (305)	78 (1.980 m)	90 (2.285 m)	1:2¼	2 Pc.
54 (1350)	0.109 (2.77)	18 (455)	30 (760)	12 (305)	84 (2.135 m)	102 (2.590 m)	1:2	2 Pc.
60 (1500)	0.109 (2.77)	18 (455)	33 (840)	12 (305)	87 (2.210 m)	114 (2.895 m)	1:1¾	3 Pc.
66 (1650)	0.109 (2.77)	18 (455)	36 (915)	12 (305)	87 (2.210 m)	120 (3.050 m)	1:1½	3 Pc.
72 (1800)	0.109 (2.77)	18 (455)	39 (990)	12 (305)	87 (2.210 m)	126 (3.200 m)	1:1⅓	3 Pc.
78 (1950)	0.109 (2.77)	18 (455)	42 (1.065 m)	12 (305)	87 (2.210 m)	132 (3.355 m)	1:1¼	3 Pc.
84 (2250)	0.109 (2.77)	18 (455)	45 (1.145 m)	12 (305)	87 (2.210 m)	138 (3.505 m)	1:1⅙	3 Pc.

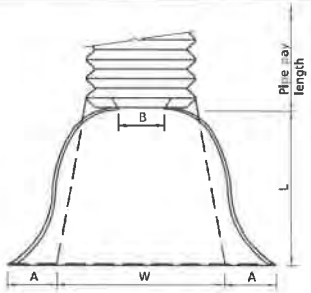

PLAN

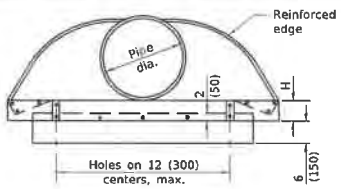

END VIEW

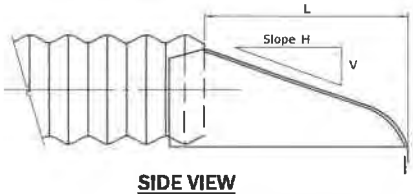

SIDE VIEW

END SECTION

NOTES

For 60 (1500) thru 84 (2250) sizes, reinforced edges shall be supplemented with stiffener angles. The angles shall be 2x2x¼(51x51x6.4) for 60 (1500) thru 72 (1800) diameter and 2½x2½x¼ (64x64x6.4) for 78 (1950) thru 84 (2250) diameter. The angles shall be attached by ⅜ (M10) rivets or bolts.

All slope ratios are expressed as units of vertical displacement to units of horizontal displacement (V:H).

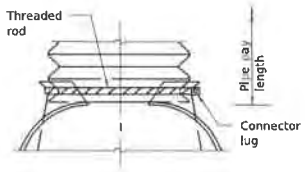

TYPE 1
For 12 (300) thru 24 (600) only (See Note 1)

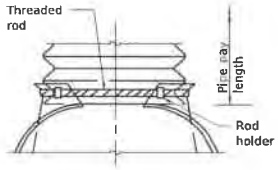

TYPE 2
For 30 (750) and 36 (900) only (See Note 1)

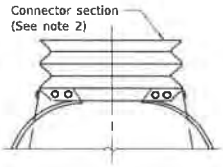

TYPE 3
(See Note 2)

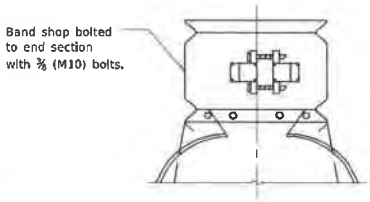

TYPE 4
(See Note 3)

1 (25) wide, 0.109 (2.77) thick strap with standard ½x6 (M12x150) band bolt and nut.

ALTERNATE STRAP CONNECTOR
(For Type 1 only)

NOTES

1. Types 1 and 2 for pipes with annular ends only.
2. Type 3 connection may be used for all pipe sizes and includes 12 (300) of the pipe length. The connector section shall be attached to the end section by rivets or bolts and shall be the same metal thickness as the end section. Stub shall be either 2⅔ (68) pitch x ½ (13) depth or 3 (75) pitch x 1 (25) depth annular corrugated pipe.
3. Type 4 connection can be used for all pipe sizes. Coupler shall be 2⅔ x ½ (68x13) dimple, hugger, or annular band of 3x1 (75x25). The dimple, hugger, or annular band may be used with corrugated metal pipes having annular ends. For corrugated metal pipes having helical ends, only the dimple band will be allowed.

All dimensions are in inches (millimeters) unless otherwise shown.

CONNECTIONS OF END SECTIONS

Illinois Department of Transportation

PASSED January 1, 2021
ENGINEER OF POLICY AND PROCEDURES

APPROVED January 1, 2021
ENGINEER OF DESIGN AND ENVIRONMENT

ISSUED 1-1-97

DATE	REVISIONS
1-1-21	Revised THICKNESS values in table.
1-1-18	Renamed standard.

METAL FLARED END SECTION FOR PIPE CULVERTS

STANDARD 542401-04

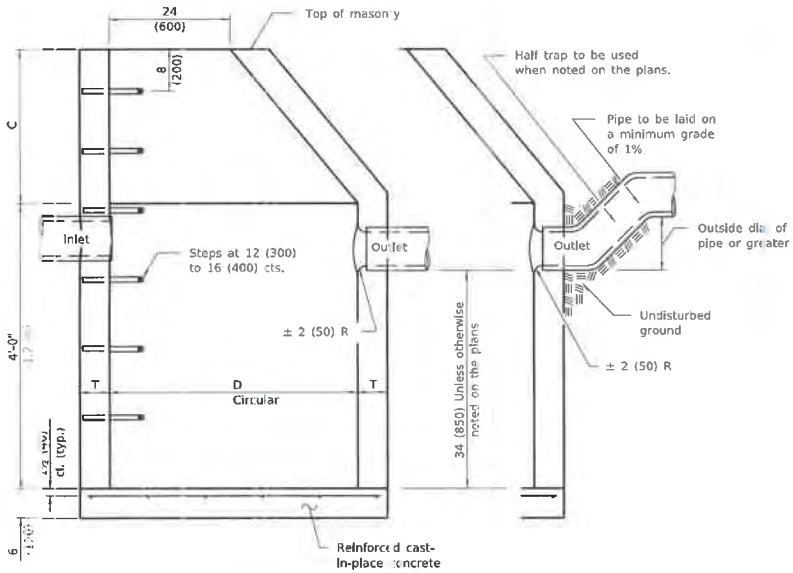

ELEVATION
(Standard Outlet)

ELEVATION
(Half Trap)

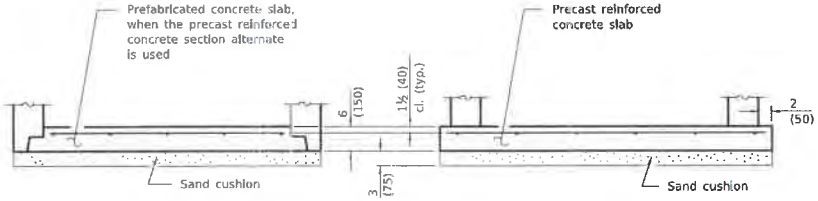

ALTERNATE BOTTOM SLAB

ALTERNATE MATERIALS FOR WALLS	D	C*	T (min.)
Concrete Masonry Unit	4'-0" (1.2 m) 5'-0" (1.5 m)	30 (750) 3'-9" (1.15 m)	5 (125) 5 (125)
Brick Masonry	4'-0" (1.2 m) 5'-0" (1.5 m)	30 (750) 3'-9" (1.15 m)	8 (200) 8 (200)
Precast Reinforced Concrete Section	4'-0" (1.2 m) 5'-0" (1.5 m)	30 (750) 3'-9" (1.15 m)	4 (100) 5 (125)
Cast-in-place Concrete	4'-0" (1.2 m) 5'-0" (1.5 m)	30 (750) 3'-9" (1.15 m)	6 (150) 6 (150)

* For precast reinforced concrete sections, dimension "C" may vary from the dimension given to plus 6 (150).

GENERAL NOTES

Bottom slabs shall be reinforced with a minimum of 0.20 sq. in./ft (420 sq. mm/m) in both directions with a maximum spacing of 12 (300).

Bottom slabs may be connected to the riser as determined by the fabricator; however, only a single row of reinforcement around the perimeter may be utilized.

See Standard 602601 for optional precast reinforced concrete flat slab top.

See Standard 602701 for details of steps.

All dimensions are in inches (millimeters) unless otherwise shown.

Illinois Department of Transportation

PASSED January 1, 2011
ENGINEER OF POLICY AND PROCEDURES

APPROVED January 1, 2011
ENGINEER OF DESIGN AND ENVIRONMENT

SSRBD 1-1-97

DATE	REVISIONS
1-1-11	Added 'Outside' to half trap
	note. Detail rein. in slabs.
	Revised general notes.
1-1-09	Switched units to
	English (metric).

CATCH BASIN TYPE A

STANDARD 602001-02

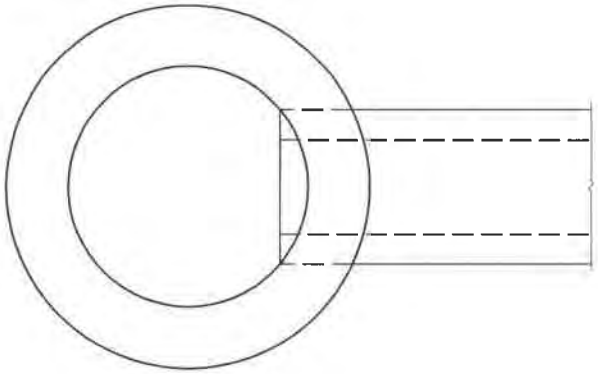

PLAN

ALTERNATE MATERIALS FOR WALLS	T
BRICK MASONRY	8 (200)
CAST-IN-PLACE CONCRETE	6 (150)
CONCRETE MASONRY UNIT	5 (125)
PRECAST REINFORCED CONCRETE SECTION	3 (75)

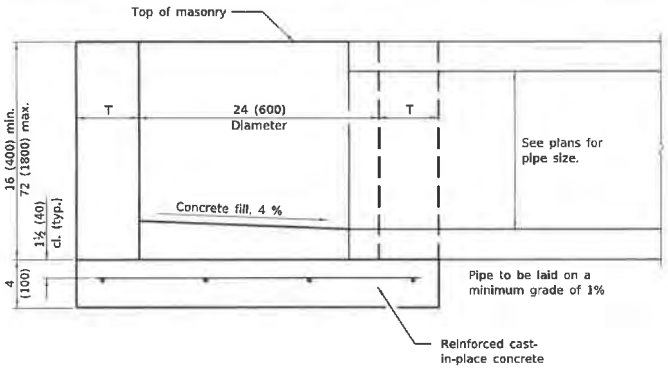

ELEVATION

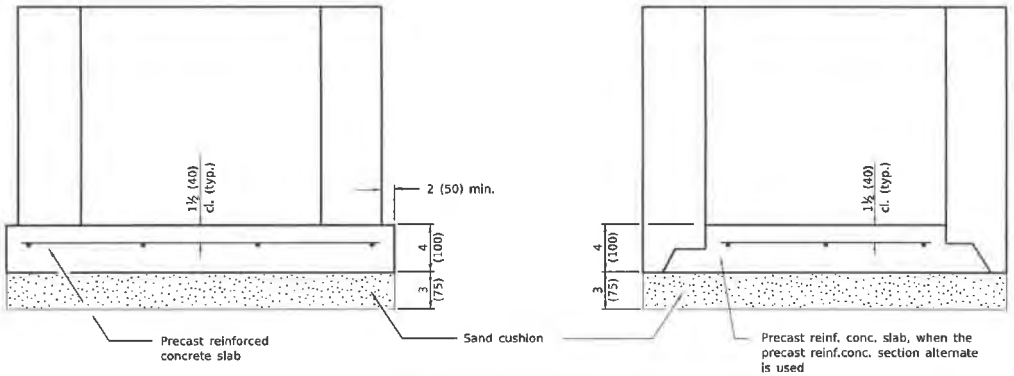

ALTERNATE METHODS

GENERAL NOTES

Bottom slabs shall be reinforced with a minimum of 0.24 sq. in./ft. (510 sq. mm/m) in both directions with a maximum spacing of 10 (250).

Bottom slabs may be connected to the riser as determined by the fabricator; however, only a single row of reinforcement around the perimeter may be utilized.

All dimensions are in inches (millimeters) unless otherwise shown.

Illinois Department of Transportation

PASSED January 1, 2014
ENGINEER OF POLICY AND PROCEDURES
APPROVED January 1 2014
ENGINEER OF DESIGN AND ENVIRONMENT

ISSUED 1-1-97

DATE	REVISIONS
1-1-14	Increased height to
	72 (1800) maximum.
1-1-11	Detailed rein. in slabs.
	Added max. limit to height.
	Added general notes.

INLET - TYPE A

STANDARD 602301-04

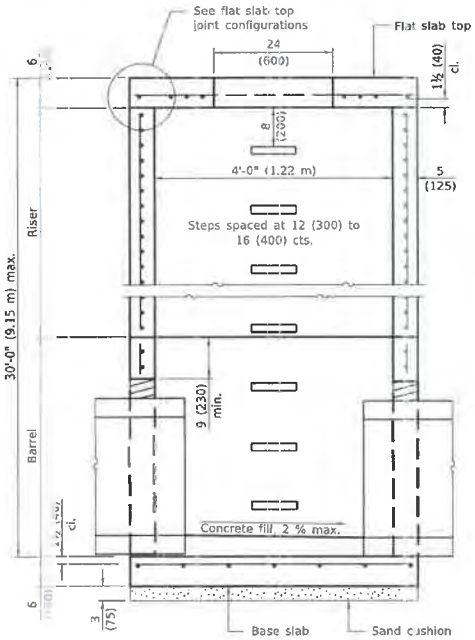

SECTION PARALLEL TO PIPE

(Without conical top riser)

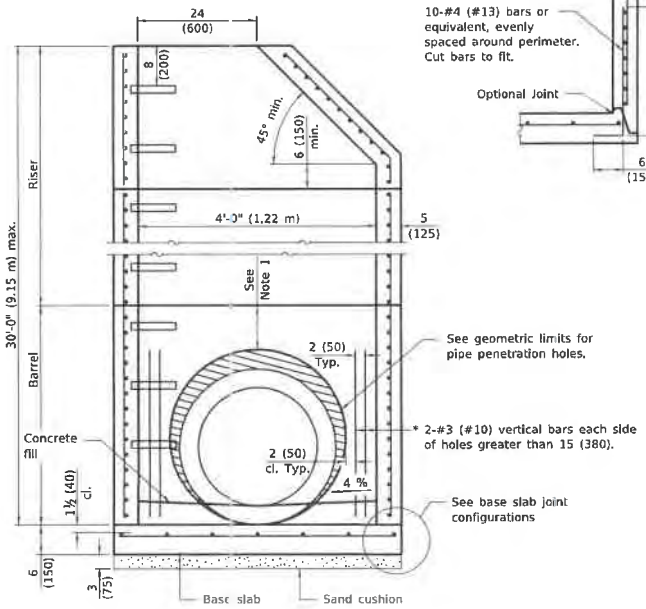

SECTION PERPENDICULAR TO PIPE

(With conical top riser)

* As an alternate, the barrel wall reinforcement may be reduced to riser wall reinforcement with #3 (#10) bars placed around the pipe penetration holes as shown. This option may be utilized when the pipe penetration holes are formed as opposed to cored.

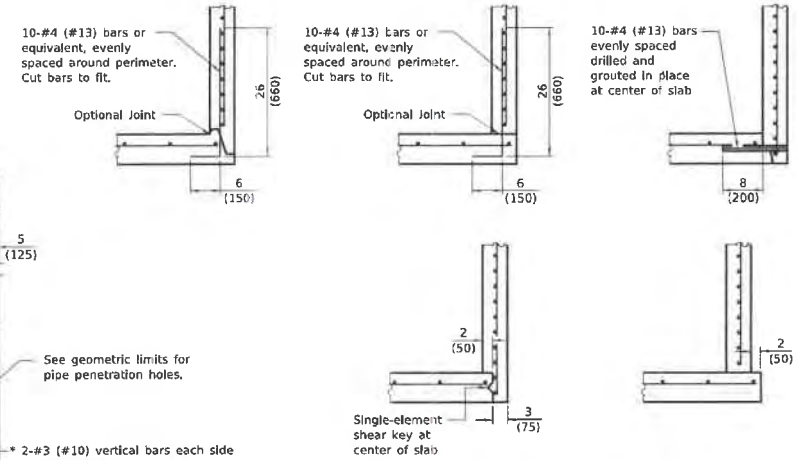

BASE SLAB JOINT CONFIGURATIONS

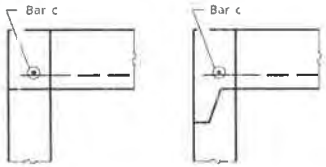

FLAT SLAB TOP JOINT CONFIGURATIONS

(Shown at access hole)

GEOMETRIC LIMITS FOR PIPE PENETRATION HOLES

Note 1: A minimum of 9 (230) of monolithic reinforced concrete shall be maintained above pipe penetration holes > 24 (600).

Note 2: A minimum 12 (300) inside arc length of reinforced concrete shall be maintained between pipe penetration holes > 15 (380).

Note 3: A maximum of 60 percent of the inside perimeter of the reinforced concrete manhole walls may be removed.

Note 4: Horizontal joints that intersect pipe penetration holes > 15 (380) shall have one joint splice for every location around the perimeter of the joint where the inside arc length between pipe penetration holes is < 24 (600). See joint splice detail.

Note 5: The recommended pipe penetration hole is equal to the O.D. of the pipe plus 4 (100).

Note 6: Only pipe penetration holes ≤ 15 (380) are allowed in riser sections.

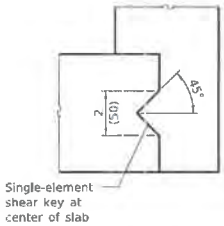

SHEAR KEY GEOMETRY

(Reinforcement not shown for clarity)

GENERAL NOTES

The manufacturer shall ensure that all precast manhole sections are additionally reinforced where required to resist damage from handling, shipping and installation stresses.

Lifting holes shall be located in the sections as per the manufacturer's recommendations.

See Standard 602701 for details of manhole steps.

All dimensions are in inches (millimeters) unless otherwise noted.

Illinois Department of Transportation

PASSED January 1, 2021
ENGINEER OF POLICY AND PROCEDURES

APPROVED January 1, 2021
ENGINEER OF DESIGN AND ENVIRONMENT

ISSUED 1-1-97

DATE	REVISIONS
1-1-21	Revised Note 1 and lifting hole general note.
3-1-19	Moved wall reinforcement from inside face to middle.

PRECAST MANHOLE TYPE A 4' (1.22 m) DIAMETER

(Sheet 1 of 2)

STANDARD 602401-07

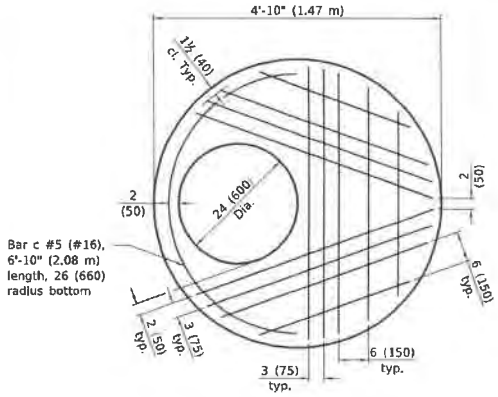

PLAN - FLAT SLAB TOP

(Showing layout of reinforcement bars and c bars)

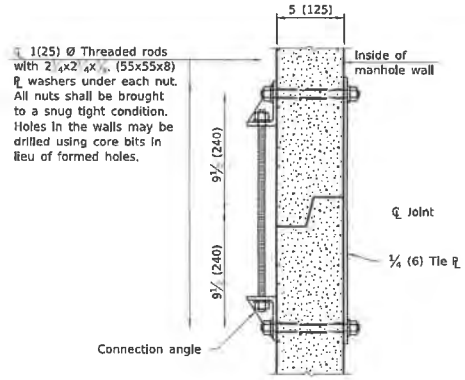

JOINT SPLICE

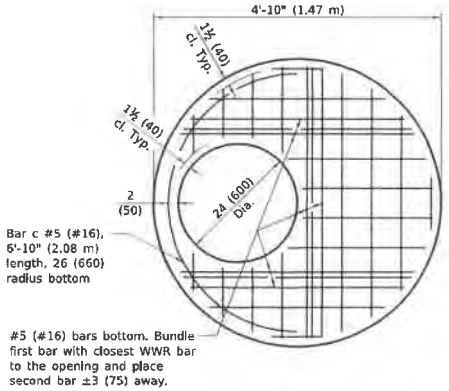

PLAN - FLAT SLAB TOP

(Showing layout of welded wire reinforcement and c bars)

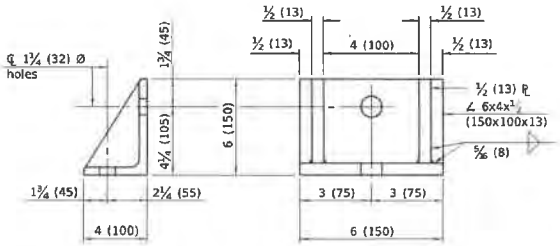

CONNECTION ANGLE

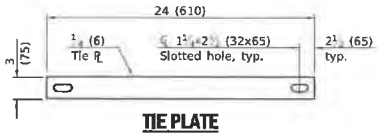

TIE PLATE

FLAT SLAB TOP REINFORCEMENT

Location	WWR (each direction)		Rebar		
	A_s (min.)	Spacing (max.)	A_s (min.)	Spacing (max.)	Bar Size
Bottom Mat	** 0.62 sq. in./ft. (1312 sq. mm/m)	6 (150)	See plan view for rebar orientation and spacing and this table for bar size		#5 (#16)

** Only one layer of WWR permitted to avoid congestion.

WALL REINFORCEMENT

Location	Orientation	WWR or Rebar	
		A_s (min.)	Spacing (max.)
Riser	Circumferential	0.12 sq. in./ft. (254 sq. mm/m)	6 (150)
	Vertical	0.045 sq. in./ft. (95 sq. mm/m)	8 (200)
Barrel	Circumferential	0.12 sq. in./ft. (254 sq. mm/m)	6 (150)
	Vertical	0.16 sq. in./ft. (339 sq. mm/m)	4 (100)

BASE SLAB REINFORCEMENT

Location	Total Height	WWR or Rebar (each direction)	
		A_s (min.)	Spacing (max.)
Top Mat	≤ 20 ft. (6.10 m)	0.24 sq. in./ft. (508 sq. mm/m)	10 (250)
	> 20 ft. (6.10 m)	0.24 sq. in./ft. (508 sq. mm/m)	10 (250)

Illinois Department of Transportation

PASSED January 1, 2021
ENGINEER OF POLICY AND PROCEDURES
APPROVED January 1, 2021
ENGINEER OF DESIGN AND ENVIRONMENT

ISSUED 1-1-07

PRECAST MANHOLE TYPE A 4' (1.22 m) DIAMETER

(Sheet 2 of 2)

STANDARD 602401-07

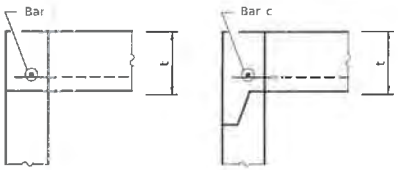

FLAT SLAB TOP JOINT CONFIGURATIONS FOR D = 36 (900) AND D = 4'-0" (1.22 m)

(Shown at access hole)

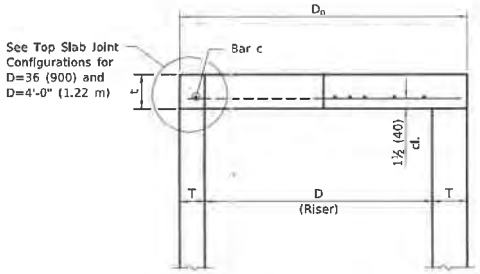

SECTION THRU FLAT SLAB TOP FOR D = 36 (900) AND D = 4'-0" (1.22 m)

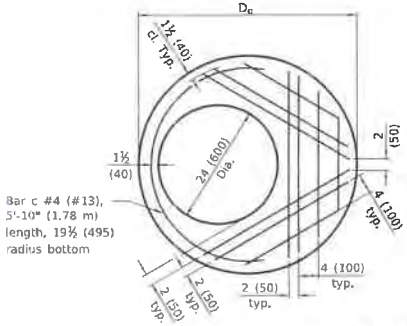

PLAN - FLAT SLAB TOP FOR D = 36 (900)

(Showing layout of reinforcement bars and c bars)

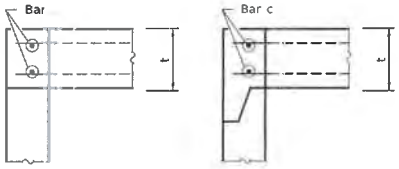

FLAT SLAB TOP JOINT CONFIGURATIONS D = 5'-0" (1.52 m)

(Shown at access hole)

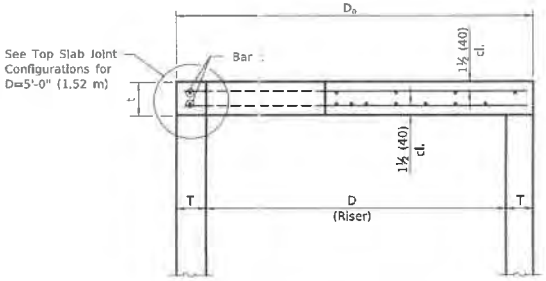

SECTION THRU FLAT SLAB TOP FOR D = 5'-0" (1.52 m)

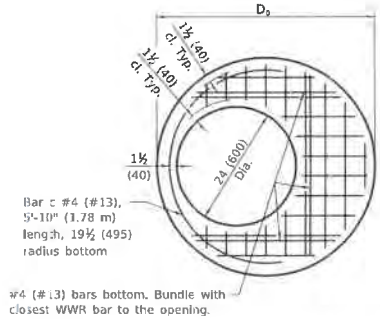

PLAN - FLAT SLAB TOP FOR D = 36 (900)

(Showing layout of welded wire reinforcement and c bars)

TABLE

D	T	D_o (min.)	t
36 (900)	See applicable Standards	D + 2T	6 (150)
4'-0" (1.2 m)			6 (150)
5'-0" (1.5 m)			8 (200)

GENERAL NOTES

The flat slab top may be used in lieu of the tapered tops shown on Standards 602001, 602016, or 602306 at the option of the Contractor or when field conditions prohibit the use of tapered tops.

Lifting holes shall be located in the sections as per the manufacturer's recommendations.

All dimensions are in inches (millimeters) unless otherwise shown.

Illinois Department of Transportation

PASSED January 1, 2019
ENGINEER OF POLICY AND PROCEDURES

APPROVED January 1, 2019
ENGINEER OF DESIGN AND ENVIRONMENT

ISSUED 1-1-97

DATE	REVISIONS
1-1-19	Expanded / refined reinforcement options.
1-1-18	Revised for compliance with LRFD.

PRECAST REINFORCED CONCRETE FLAT SLAB TOP

(Sheet 1 of 2)

STANDARD 602601-06

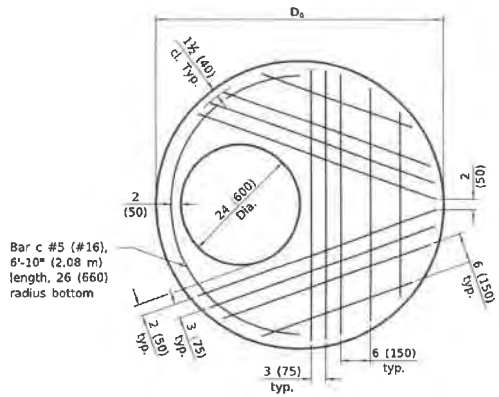

PLAN - FLAT SLAB TOP FOR D = 4'-0" (1.22 m)
(Showing layout of reinforcement bars and c bars)

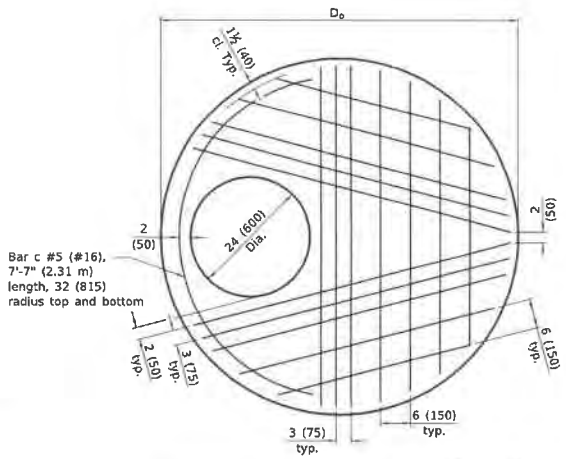

PLAN - FLAT SLAB TOP FOR D = 5'-0" (1.52 m)
(Showing layout of bottom reinforcement bars and c bars)

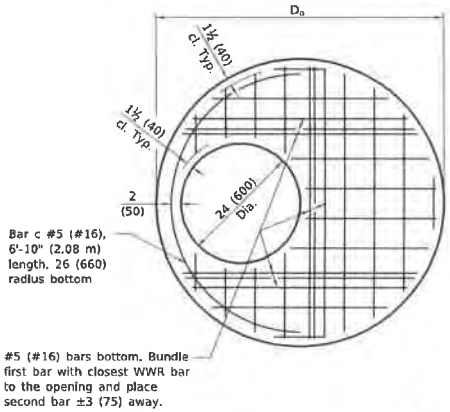

PLAN - FLAT SLAB TOP FOR D = 4'-0" (1.22 m)
(Showing layout of welded wire reinforcement and c bars)

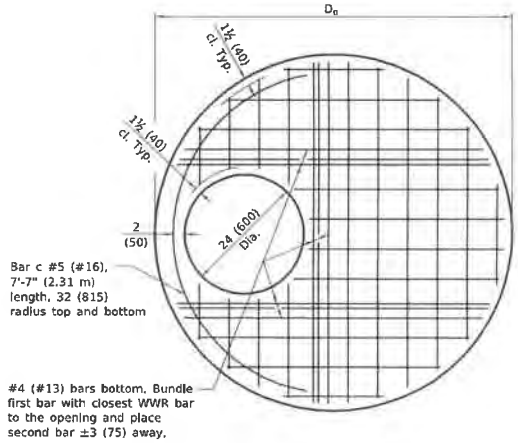

PLAN - FLAT SLAB TOP FOR D = 5'-0" (1.52 m)
(Showing layout of welded wire reinforcement and c bars)

FLAT SLAB TOP REINFORCEMENT FOR D = 36 (900)

Location	WWR (each direction)		Rebar		
	A_s (min.)	Spacing (max.)	A_s (min.)	Spacing (max.)	Bar Size
Bottom Mat	* 0.60 sq. in./ft. (1270 sq. mm/m)	6 (150)	See plan view for rebar orientation and spacing and this table for bar size		#4 (#13)

FLAT SLAB TOP REINFORCEMENT FOR D = 4'-0" (1.22 m)

Location	WWR (each direction)		Rebar		
	A_s (min.)	Spacing (max.)	A_s (min.)	Spacing (max.)	Bar Size
Bottom Mat	* 0.62 sq. in./ft. (1312 sq. mm/m)	6 (150)	See plan view for rebar orientation and spacing and this table for bar size		#5 (#16)

FLAT SLAB TOP REINFORCEMENT FOR D = 5'-0" (1.52 m)

Location	WWR (each direction)		Rebar (each direction except as noted)		
	A_s (min.)	Spacing (max.)	A_s (min.)	Spacing (max.)	Bar Size
Top Mat	0.11 sq. in./ft. (233 sq. mm/m)	18 (450)	0.11 sq. in./ft. (233 sq. mm/m)	18 (450)	#3 or #4 (#10) (#13)
Bottom Mat	* 0.40 sq. in./ft. (847 sq. mm/m)	6 (150)	See plan view for rebar orientation and spacing and this table for bar size		#4 (#13)

* Only one layer of WWR permitted to avoid congestion.

Illinois Department of Transportation

PASSED January 1, 2019
ENGINEER OF POLICY AND PROCEDURES

APPROVED January 1, 2019
ENGINEER OF DESIGN AND ENVIRONMENT

ISSUED 1-1-97

PRECAST REINFORCED CONCRETE FLAT SLAB TOP

(Sheet 2 of 2)

STANDARD 602601-06

CAST IRON STEPS

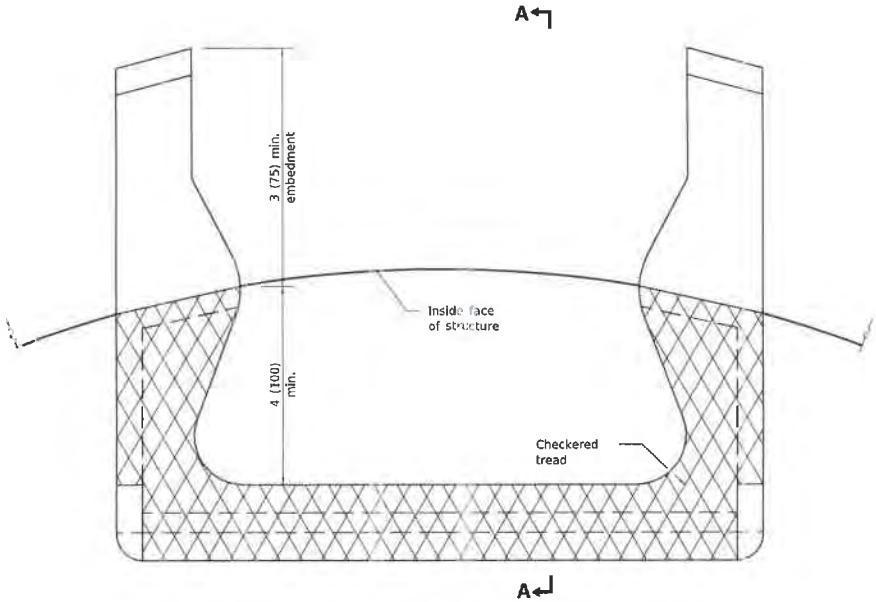

PLAN VIEW

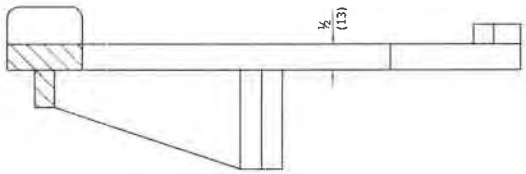

SECTION A-A

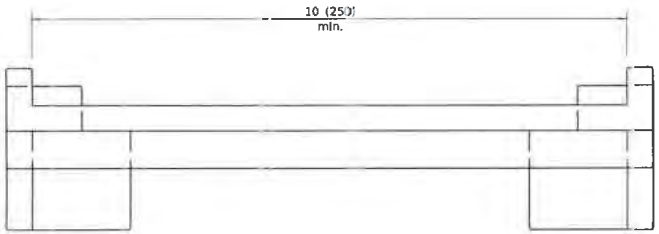

ELEVATION VIEW

All dimensions are in inches (millimeters) unless otherwise shown.

Illinois Department of Transportation

PASSED January 1, 2009
ENGINEER OF POLICY AND PROCEDURES

APPROVED January 1, 2009
ENGINEER OF DESIGN AND ENVIRONMENT

ISSUED 1-1-97

DATE	REVISIONS
1-1-09	Switched units to English (metric).
4-1-06	Revised title, drawings, and added plastic steps on sheet 2.

MANHOLE STEPS

(Sheet 1 of 2)

STANDARD 602701-02

PLASTIC STEPS

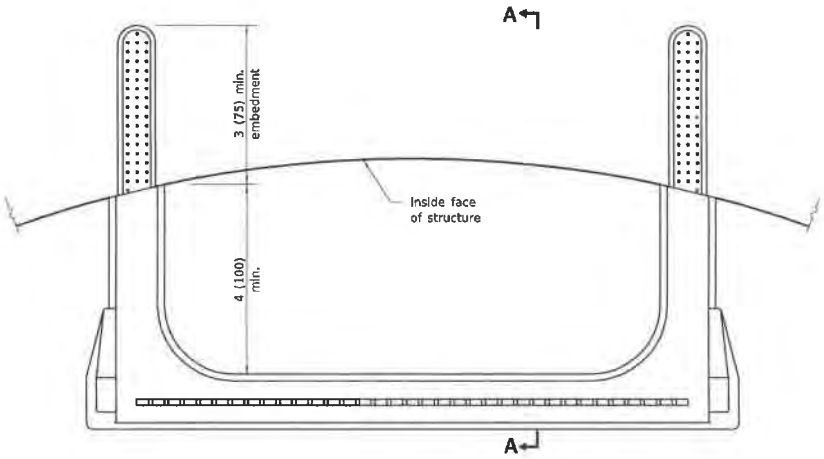

PLAN VIEW

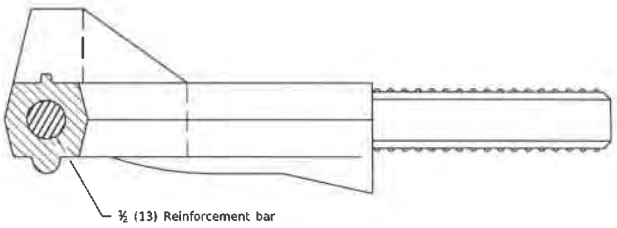

SECTION A-A

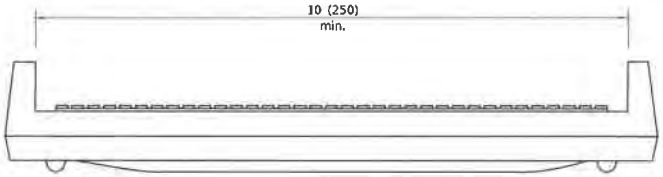

ELEVATION VIEW

Illinois Department of Transportation

PASSED January 1, 2009
ENGINEER OF POLICY AND PROCEDURES
APPROVED January 1 2009
ENGINEER OF DESIGN AND ENVIRONMENT

ISSUED 1-1-07

MANHOLE STEPS

(Sheet 2 of 2)

STANDARD 602701-02

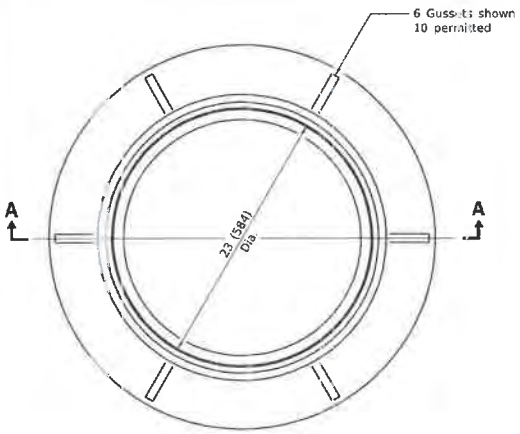

CAST FRAME

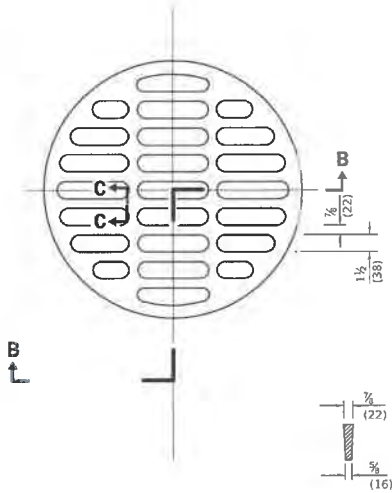

SECTION C-C

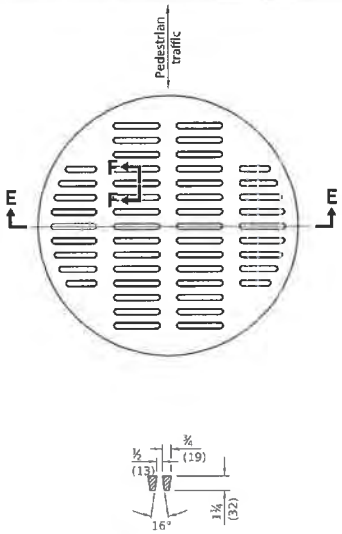

SECTION F-F

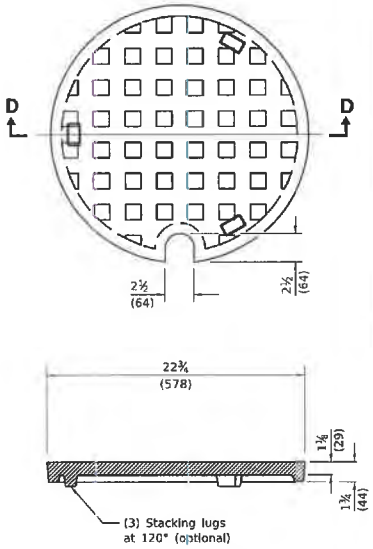

SECTION D-D

CAST CLOSED LID

Gray Iron Lid

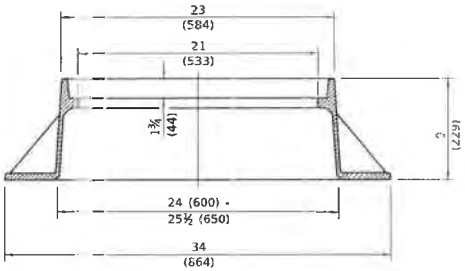

SECTION A-A

Gray Iron

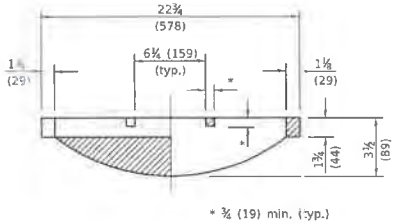

SECTION B-B

CAST OPEN LID

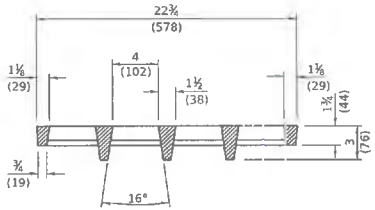

SECTION E-E

ADA COMPLIANT CAST OPEN LID

All dimensions are in inches (millimeters) unless otherwise shown.

Illinois Department of Transportation

PASSED January 1, 2020
ENGINEER OF POLICY AND PROCEDURES

APPROVED January 1, 2020
ENGINEER OF DESIGN AND ENVIRONMENT

ISSUED 1-1-97

DATE	REVISIONS
1-1-20	Revised dimension in Section B-B of cast open lid.
1-1-15	Revised dimensioning of frame. Added ADA compliant open lid.
1-1-09	Switched units to English (metric).

FRAME AND LIDS TYPE 1

STANDARD 604001-05

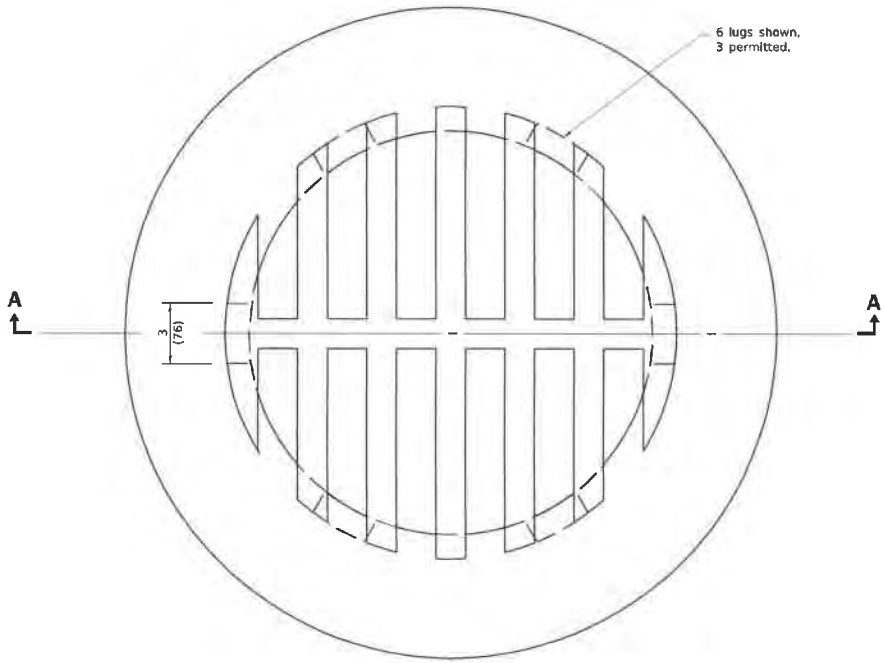

CAST GRATE

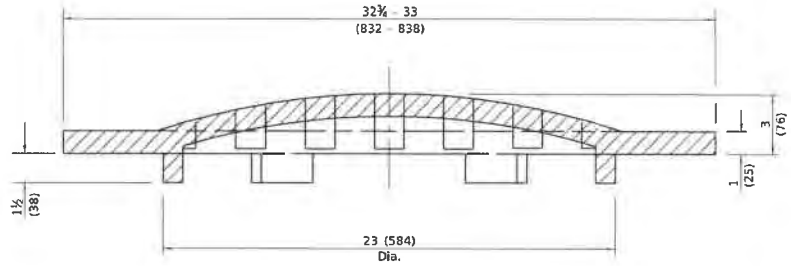

SECTION A-A

All dimensions are in inches (millimeters) unless otherwise shown.

Illinois Department of Transportation

PASSED January 1, 2015
ENGINEER OF POLICY AND PROCEDURES
APPROVED January 1, 2015
ENGINEER OF DESIGN AND ENVIRONMENT

ISSUED 1-1-97

DATE	REVISIONS
1-1-15	Revised dimensions.
1-1-09	Switched units to English (metric).

GRATE TYPE 8

STANDARD 604036-03

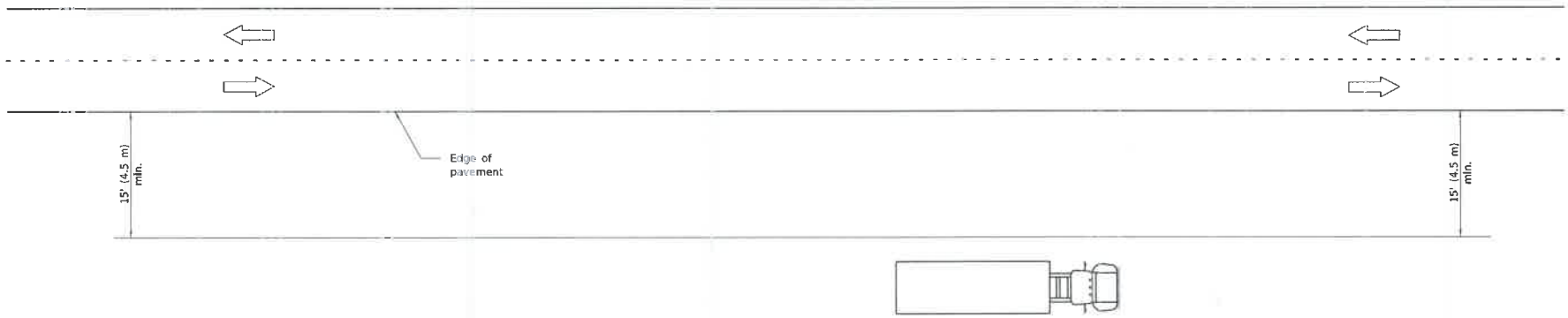

TYPICAL APPLICATIONS

Landscaping work

Utility work

Fencing contracts and maintenance

Cleaning culverts

GENERAL NOTES

This Standard is used where at all times all vehicles, equipment, workers or their activities are more than 15' (4.5 m) from the edge of pavement.

When the work operation requires that two or more work vehicles cross the 15' (4.5 m) clear zone in any one hour, traffic control shall be according to Standard 701006.

All dimensions are in inches (millimeters) unless otherwise shown.

Illinois Department of Transportation

PASSED January 1, 2009
ENGINEER OF OPERATIONS

APPROVED January 1, 2009
ENGINEER OF DESIGN AND ENVIRONMENT

ISSUED 1-1-97

DATE	REVISIONS
1-1-09	Switched units to English (metric).
1-1-05	Revised title and notes.

OFF-RD OPERATIONS, 2L, 2W, MORE THAN 15' (4.5 m) AWAY

STANDARD 701001-02

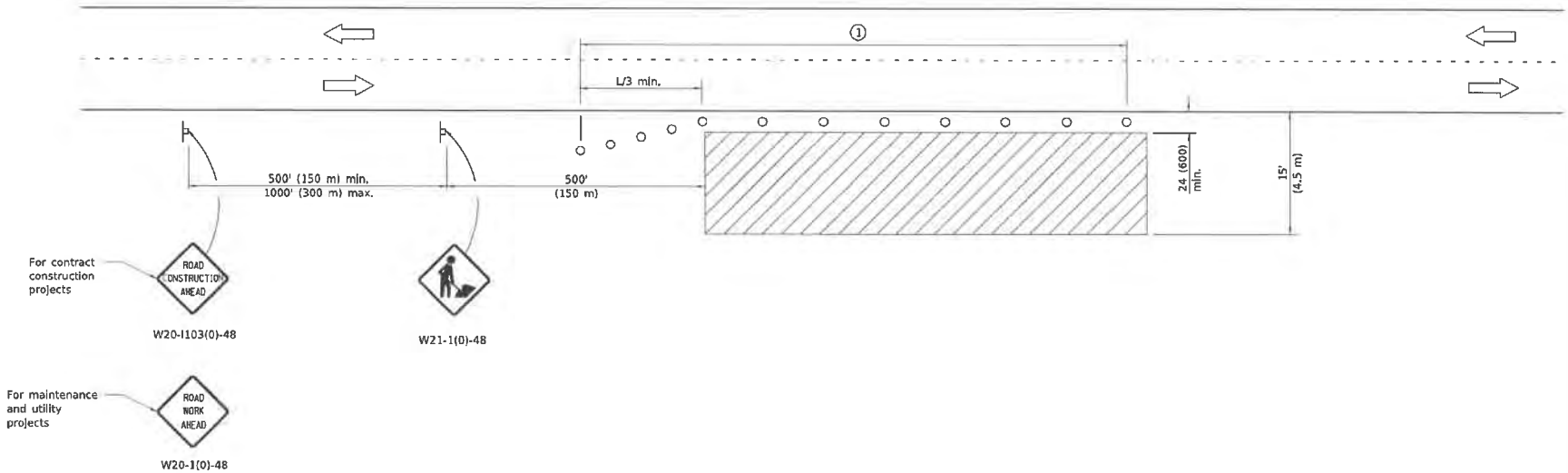

TYPICAL APPLICATIONS

Utility operations
Culvert extensions
Side slope changes
Guardrail installation and maintenance
Delineator installation
Landscaping operations
Shoulder repair
Sign installation and maintenance

SYMBOLS

Work area

Sign

Cone, drum or barricade

① When the work operation exceeds one hour, cones, drums or barricades shall be placed at 25' (8 m) centers for L/3 distance, and at 50' (15 m) centers through the remainder of the work area.

GENERAL NOTES

This Standard is used where any vehicles, equipment, workers or their activities will encroach in the area 15' (4.5 m) to 24 (600) from the edge of pavement.

Calculate L as follows:

SPEED LIMIT	FORMULAS English	FORMULAS (Metric)
40 mph (70 km/h) or less:	$L=\frac{WS^2}{60}$	$L=\frac{WS^2}{150}$
45 mph (80 km/h) or greater:	L=(W)(S)	L=0.65(W)(S)

W = Width of offset in feet (meters).

S = Normal posted speed mph (km/h).

All dimensions are in inches (millimeters) unless otherwise shown.

Illinois Department of Transportation

PASSED January 1 2014
ENGINEER OF SAFETY ENGINEERING

APPROVED January 1 2014
ENGINEER OF DESIGN AND ENVIRONMENT

ISSUED 1-1-97

DATE	REVISIONS
1-1-14	Revised workers sign
	number to agree with
	current MUTCD.
1-1-13	Omitted text 'WORKERS'
	sign.

OFF-RD OPERATIONS, 2L, 2W, 15' (4.5 m) TO 24" (600 mm) FROM PAVEMENT EDGE

STANDARD 701006-05

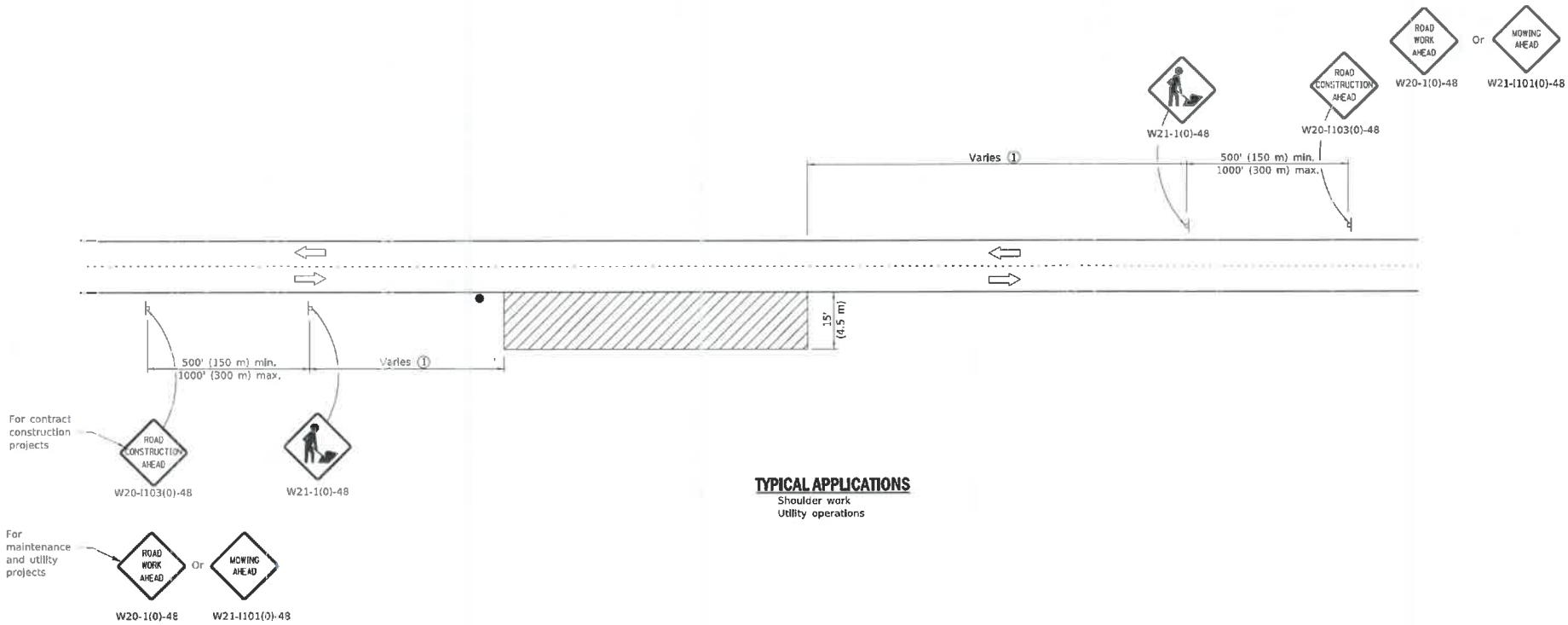

TYPICAL APPLICATIONS

Shoulder work
Utility operations

① Minimum distance is 200' (60 m). Maximum distance to be determined by the Engineer but should not exceed ½ the length required for one normal working day's operation, or 4 miles (6.4 km) whichever is less.

GENERAL NOTES

This Standard is used where at any time, any vehicle, equipment, workers or their activities require an intermittent or continuous moving operation on the shoulder, where the average speed is 1 mph (2 km/h) or less.

When the work operation does not exceed 60 minutes, traffic control may be according to Standard 701301.

All dimensions are in inches (millimeters) unless otherwise shown.

SYMBOLS

Work area

Sign

Flagger with traffic control sign when required

Illinois Department of Transportation

PASSED January 2014
ENGINEER OF SAFETY ENGINEERING

APPROVED January 1, 2014
ENGINEER OF DESIGN AND ENVIRONMENT

SSSHD 1-1-97

DATE	REVISIONS
1-1-14	Revised workers sign
	number to agree with
	current MUTCD.
1-1-13	Omitted text 'WORKERS'
	sign.

OFF-RD MOVING OPERATIONS, 2L, 2W, DAY ONLY

STANDARD 701011-04

① Devices at 20' (6 m) centers in the taper.

② Cones at 25' (8 m) centers for the first 150' (45 m). Additional cones may be placed at 50' (15 m) centers. When drums or barricades are used, these intervals between devices may be doubled.

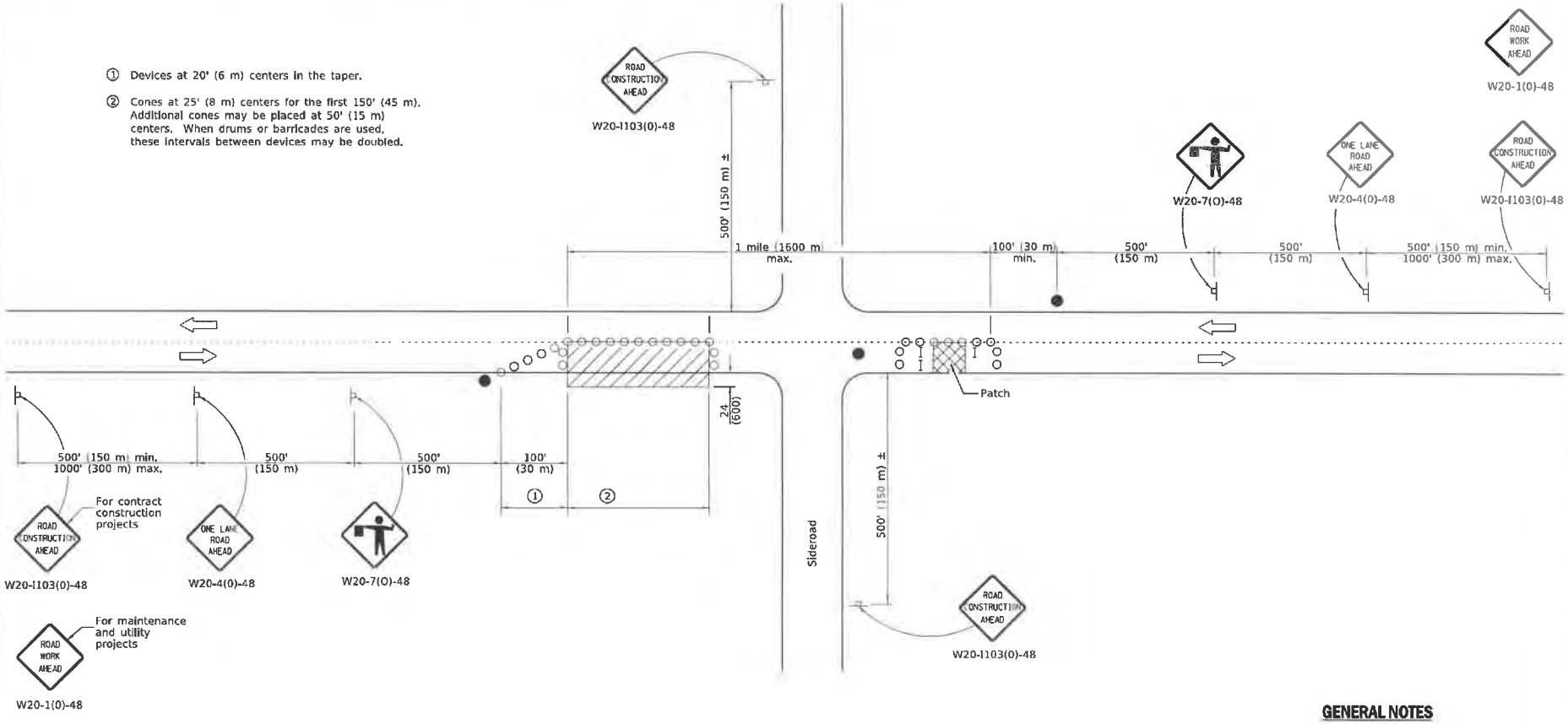

SYMBOLS

- Work area
- Sign
- Barricade or drum
- Cone, drum or barricade
- Flagger with traffic control sign

TYPICAL APPLICATIONS

Isolated patching
Utility operations
Storm sewer
Culverts
Cable placement

GENERAL NOTES

This Standard is used where at any time, any vehicles, equipment, workers or their activities will encroach in the area between the center line and a line 24 (600) outside the edge of pavement for daylight operation.

When the distance between successive work areas exceeds 2000' (600 m), additional warning signs, flaggers, and taper shall be placed as shown.

All dimensions are in inches (millimeters) unless otherwise shown.

Illinois Department of Transportation

APPROVED January 1, 2019
ENGINEER OF SAFETY PROG. AND ENGINEERING

APPROVED January 1, 2019
ENGINEER OF DESIGN AND ENVIRONMENT

ISSUED 1-1-97

DATE	REVISIONS
1-1-19	Revised device spacing in taper.
1-1-11	Revised flagger sign.

LANE CLOSURE, 2L, 2W, DAY ONLY, FOR SPEEDS ≥ 45 MPH

STANDARD 701201-05

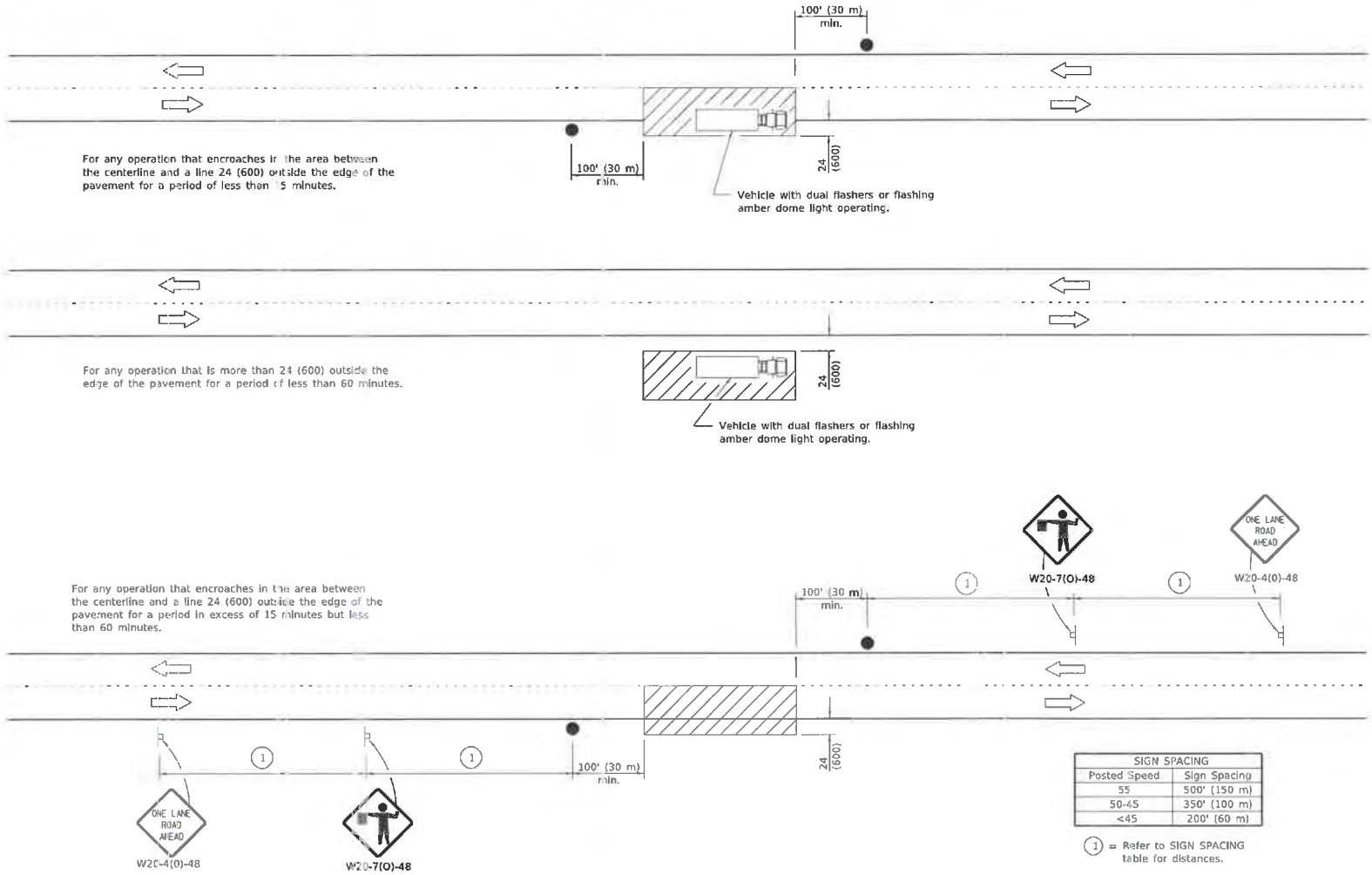

SIGN SPACING	
Posted Speed	Sign Spacing
55	500' (150 m)
50-45	350' (100 m)
<45	200' (60 m)

(1) = Refer to SIGN SPACING table for distances.

All dimensions are in inches (millimeters) unless otherwise shown.

TYPICAL APPLICATIONS

Marking patches
Field survey
String line
Utility operations
Cleaning up debris on pavement

SYMBOLS

Work area
Sign on portable or permanent support
Flagger with traffic control sign

DATE	REVISIONS
1-1-11	Revised flagger sign.
1-1-09	Switched units to English (metric).

LANE CLOSURE, 2L, 2W, SHORT TIME OPERATIONS

STANDARD 701301-04

Illinois Department of Transportation

PASSED January 1, 2011
ENGINEER OF SAFETY ENGINEERING

APPROVED January 1, 2011
ENGINEER OF DESIGN AND ENVIRONMENT

ISSUED 1-1-97

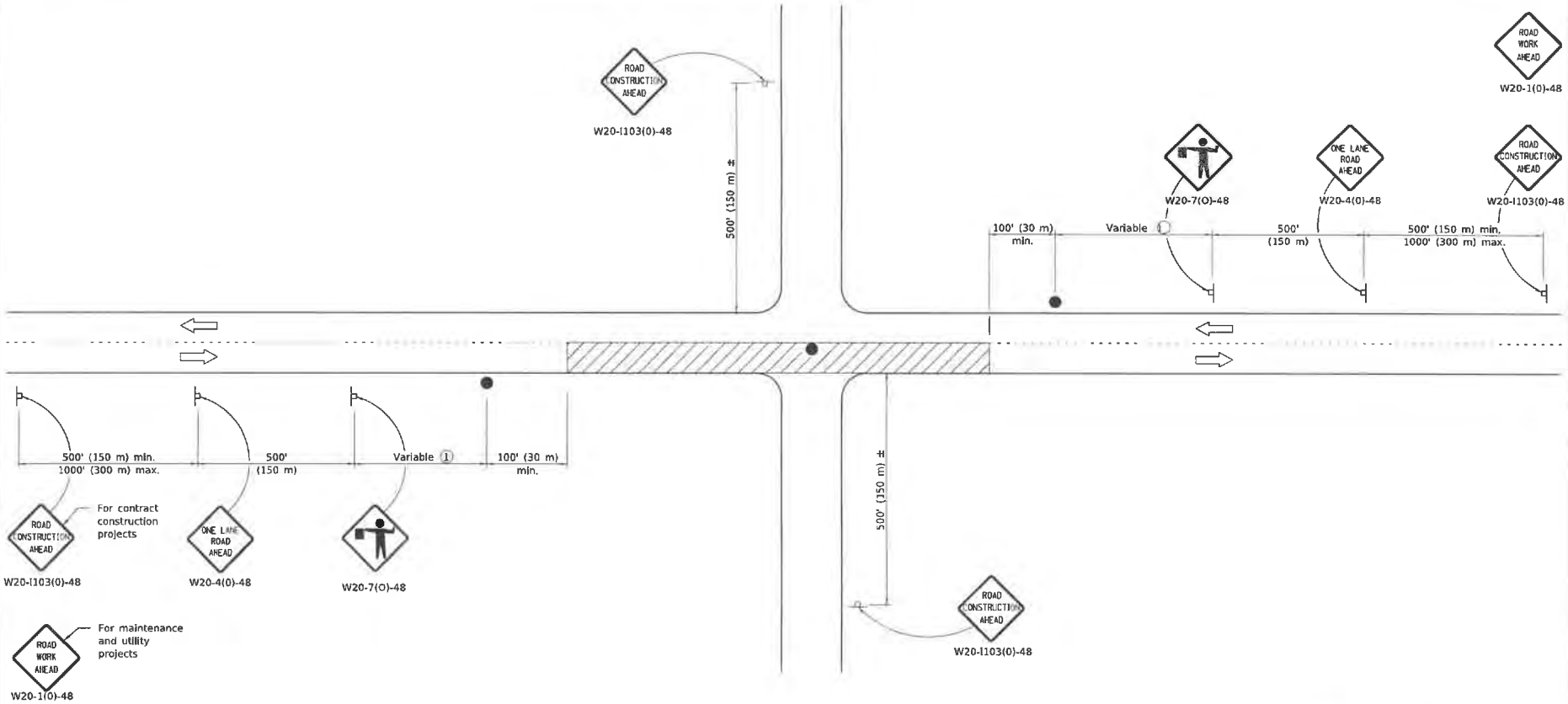

TYPICAL APPLICATIONS

Bituminous resurfacing
Milling operations
Utility operations
Shoulder operations

① Minimum distance is 200' (60 m). Maximum distance to be determined by the Engineer but should not exceed ½ the length required for one normal working day's operation or 2 miles (3200 m), whichever is less.

SYMBOLS

Work area

Sign on portable or permanent support

Flagger with traffic control sign

GENERAL NOTES

This Standard is used where at any time, any vehicle, equipment, workers or their activities require an intermittent or continuous moving operation on the pavement where the average speed of movement is greater than ½ mph (1 km/h) and less than 4 mph (6 km/h).

When the operation does not exceed 60 minutes, traffic control may be according to Standard 701301.

All dimensions are in inches (millimeters) unless otherwise shown.

Illinois Department of Transportation

PASSED January 1, 2018
ENGINEER OF SAFETY PROG. AND ENGINEERING
APPROVED January 1, 2018
ENGINEER OF DESIGN AND ENVIRONMENT

ISSUED 1-1-97

DATE	REVISIONS
1-1-18	Revised lower speed limit for operation to ½ mph.
1-1-11	Revised flagger sign.

LANE CLOSURE, 2L, 2W, SLOW MOVING OPERATIONS DAY ONLY, FOR SPEEDS ≥ 45 MPH

STANDARD 701306-04

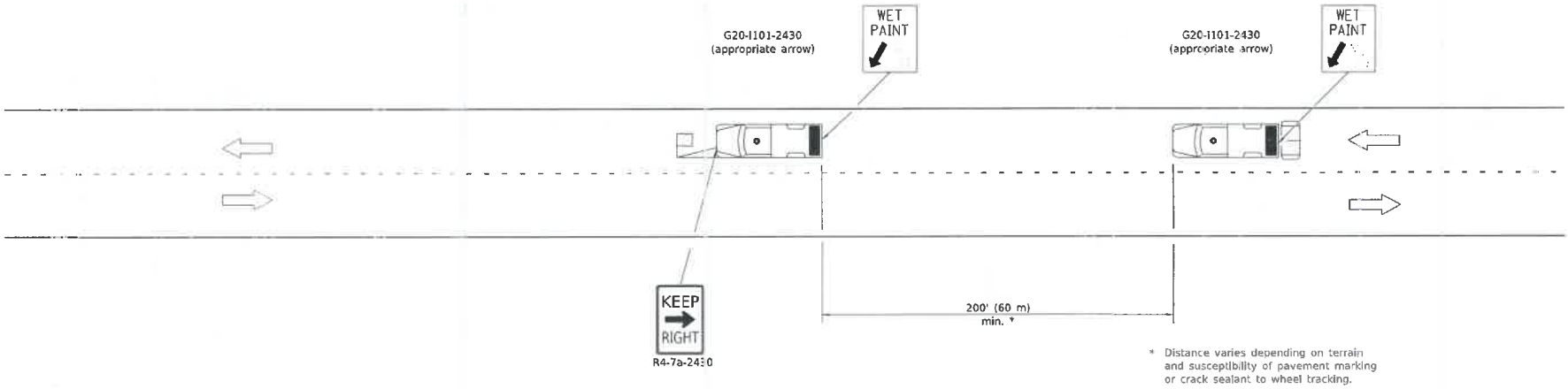

* Distance varies depending on terrain and susceptibility of pavement marking or crack sealant to wheel tracking.

TYPICAL APPLICATIONS

Landscaping work
Utility work
Pavement marking
Weed spraying
Roadometer measurements
Debris cleanup
Crack pouring

SYMBOLS

Arrow board (Hazard Mode only)

Truck with headlights, emergency flashers and flashing amber light. (visible from all directions)

18x18 (450x450) min. orange flag (use when guide wheel is used)

Truck mounted attenuator

GENERAL NOTES

This Standard is used where any vehicle, equipment, workers or their activities will require a continuous moving operation where the average speed is greater than 3 mph (5 km/h).

For shoulder operations not encroaching on the pavement, use DETAIL A, Standard 701426.

All dimensions are in inches (millimeters) unless otherwise shown.

Illinois Department of Transportation

PASSED January 1, 2009
ENGINEER OF OPERATIONS

APPROVED January 1, 2009
ENGINEER OF DESIGN AND ENVIRONMENT

(SSJ/PJ) 1-1-97

DATE	REVISIONS
1-1-09	Switched units to
	English (metric). Omitted
	Pass With Care sign.
1-1-00	Elim. speed restrictions
	in Standard title.

LANE CLOSURE 2L, 2W MOVING OPERATIONS-DAY ONLY

STANDARD 701311-03

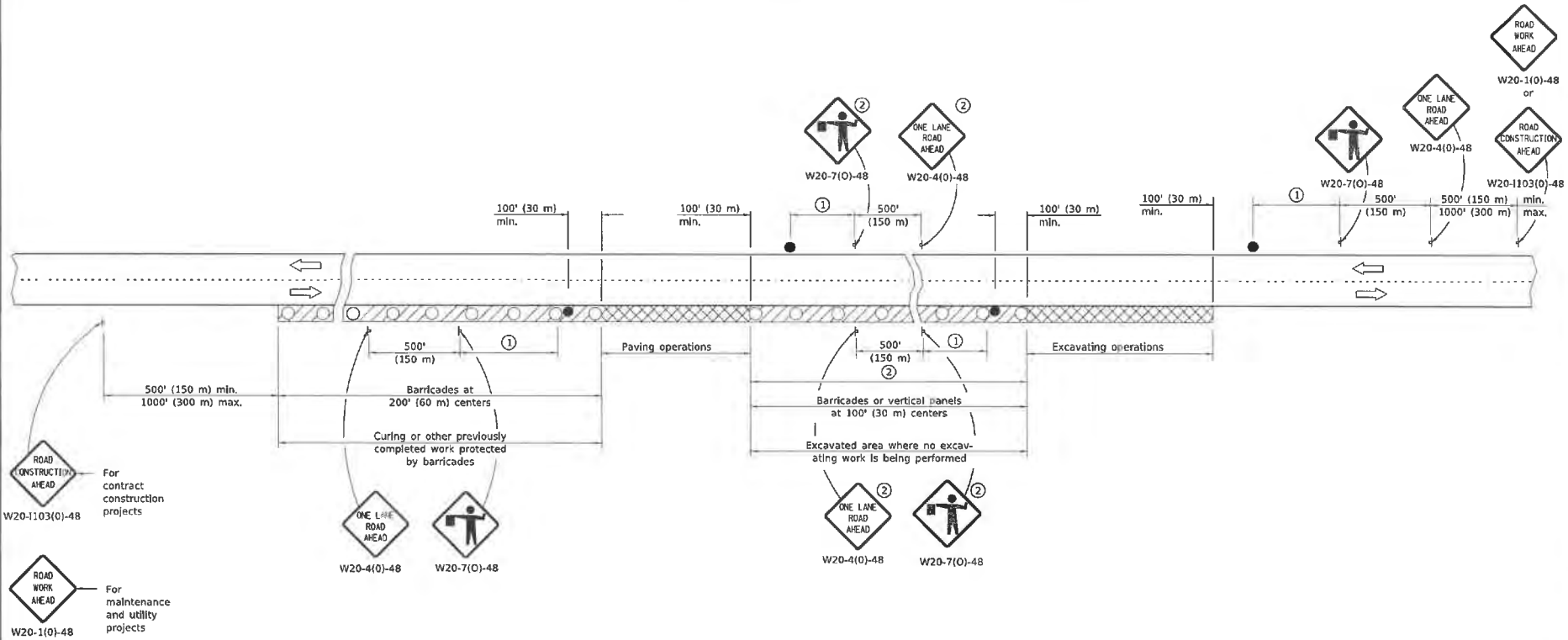

SYMBOLS

- Work area
- Active Work area
- Sign
- Barricade, drum, or vertical panels
- Flagger with traffic control sign

(1) Minimum distance is 200' (60 m). Maximum distance to be determined by the Engineer but in no case to exceed the length of ½ day's normal operation or 2 miles (3200 m) whichever is less.

(2) Signs are not required if distance between work operations is less than 2000' (600 m) unless restricted sight distance exists.

GENERAL NOTES

This Standard is used where at any time, any vehicle, equipment, workers or their activities will encroach on the pavement during widening operations.

Two flaggers are required for each separate operation.

All dimensions are in inches (millimeters) unless otherwise shown.

Illinois Department of Transportation

PASSED January 1, 2011
ENGINEER OF SAFETY ENGINEERING

APPROVED January 1, 2011
ENGINEER OF DESIGN AND ENVIRONMENT

ISSUED 1-1-97

DATE	REVISIONS
1-1-11	Revised flagger sign.
1-1-09	Switched units to English (metric). Corrected sign No.'s.

LANE CLOSURE, 2L, 2W, PAVEMENT WIDENING, FOR SPEEDS ≥ 45 MPH

STANDARD 701326-04

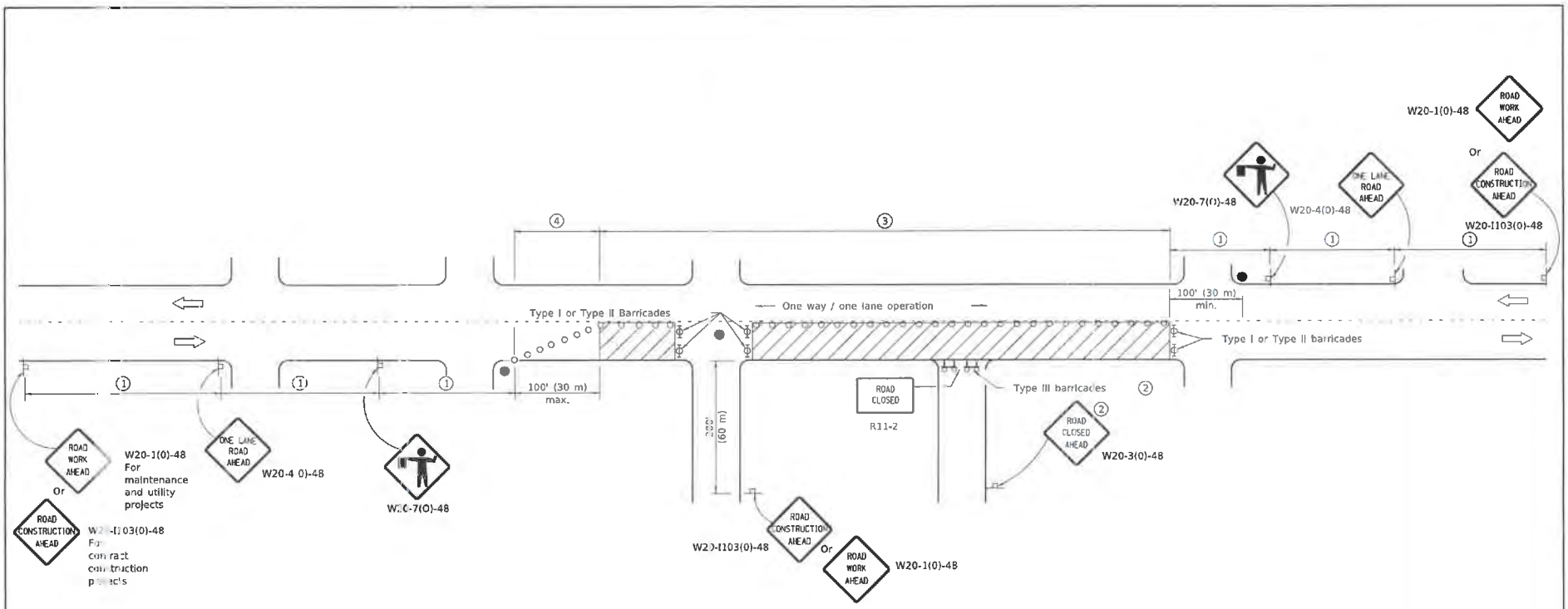

SIGN SPACING	
Posted Speed	Sign Spacing
55	500' (150 m)
40-45	350' (100 m)
<45	200' (60 m)

SYMBOLS

- Work area
- Cone, drum or barricade (not required for moving operations)
- Sign on portable or permanent support
- Flagger with traffic control sign
- Barricade or drum with flashing light
- Type III barricade with flashing lights

1. Refer to SIGN SPACING TABLE for distances.
2. For approved sideroad closures.
3. Cones at 25' (8 m) centers for 250' (75 m). Additional cones may be placed at 50' (15 m) centers. When drums or Type I or Type II barricades are used, the interval between devices may be doubled.
4. Cones, drums or barricades at 20' (6 m) centers.

GENERAL NOTES

This Standard is used where at any time, day or night, any vehicle, equipment, workers or their activities encroach on the pavement requiring the closure of one traffic lane in an urban area.

All dimensions are in inches (millimeters) unless otherwise shown.

Illinois Department of Transportation

PASSED May 1, 2011
ENGINEER OF SAFETY ENGINEERING

APPROVED May 1, 2011
ENGINEER OF DESIGN AND ENVIRONMENT

ISSUED 1-1-97

DATE	REVISIONS
1-1-11	Revised flagger sign.
1-1-09	Switched units to
	English (metric).
	Corrected sign No.'s.

URBAN LANE CLOSURE, 2L, 2W, UNDIVIDED

STANDARD 701501-06

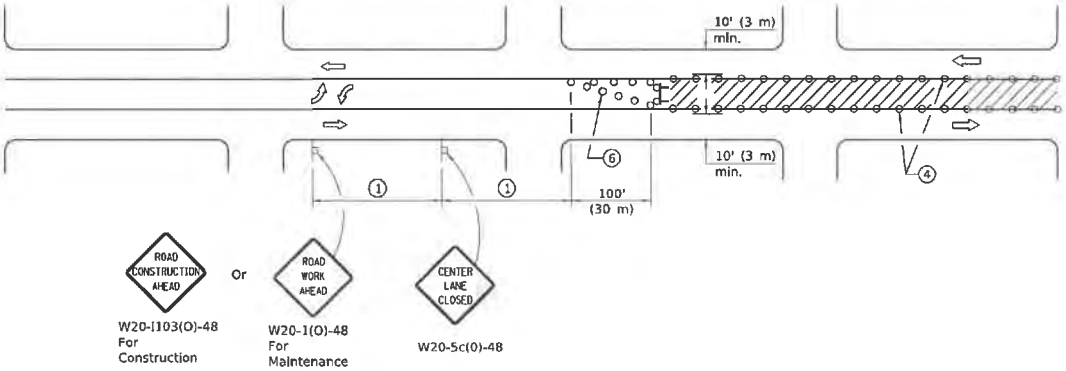

CASE I

(Signs required for both directions)

SIGN SPACING	
Posted Speed	Sign Spacing
55	500' (150 m)
50-45	350' (100 m)
<45	200' (60 m)

SYMBOLS

- Work area
- Barricade or drum with flashing light
- Flagger with traffic control sign
- Cone, drum or barricade
- Sign on portable or permanent support
- Type III barricade with flashing lights

1. Refer to SIGN SPACING TABLE for distances.
2. Required for speeds > 40 mph (70 km/h).
3. Required if work exceeds 500' (164 m) or 1 block.
4. Cones at 25' (8 m) centers for 250' (75 m) on approach. Additional cones may be placed at 50' (15 m) centers. When drums or type I or II barricades are used, the interval between devices may be doubled.
5. For approved sideroad closures.
6. Cones, drums or barricades at 20' (6 m) centers in taper.
7. Use flagger sign only when flagger is present.

GENERAL NOTES

This Standard is used to close one lane of an urban, two lane, two way roadway with a bidirectional turn lane.

Case I applies when no workers are present. When workers are present, two lanes shall be closed and traffic control shall be according to Standard 701501.

Calculate L as follows:

SPEED LIMIT	FORMULAS English	FORMULAS (Metric)
40 mph (70 km/h) or less:	$L=\frac{WS^2}{60}$	$L=\frac{WS^2}{150}$
45 mph (80 km/h) or greater:	$L=(W)(S)$	$L=0.65(W)(S)$

W = Width of offset in feet (meters).

S = Normal posted speed mph (km/h).

All dimensions are in inches (millimeters) unless otherwise shown.

Illinois Department of Transportation

APPROVED January 1, 2019
ENGINEER OF SAFETY PROG. AND ENGINEERING

APPROVED January 1, 2019
ENGINEER OF DESIGN AND ENVIRONMENT

SSGRD 1-1-01

DATE	REVISIONS
1-1-19	Revised to allow cones at night.
1-1-18	Corrected sign number for TWO WAY TRAFFIC sign for CASE II.

URBAN LANE CLOSURE, 2L, 2W, WITH BIDIRECTIONAL LEFT TURN LANE

(Sheet 1 of 2)

STANDARD 701502-09

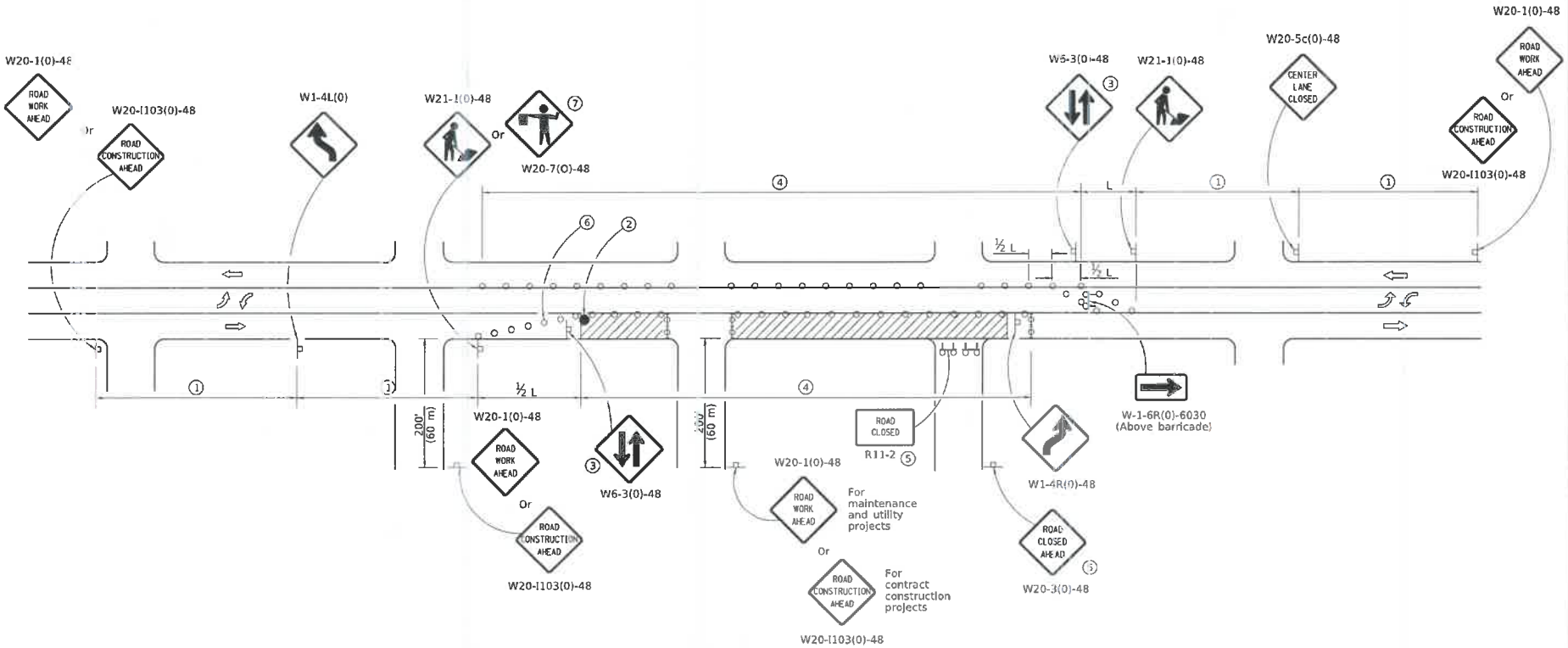

CASE II

Illinois Department of Transportation

APPROVED January 1, 2019
ENGINEER OF SAFETY, ECONOMICS, AND ENGINEERING

APPROVED January 1, 2019
ENGINEER OF DESIGN AND ENVIRONMENT

ISSUED 1-1-01

URBAN LANE CLOSURE, 2L, 2W, WITH BIDIRECTIONAL LEFT TURN LANE

(Sheet 2 of 2)

STANDARD 701502-09

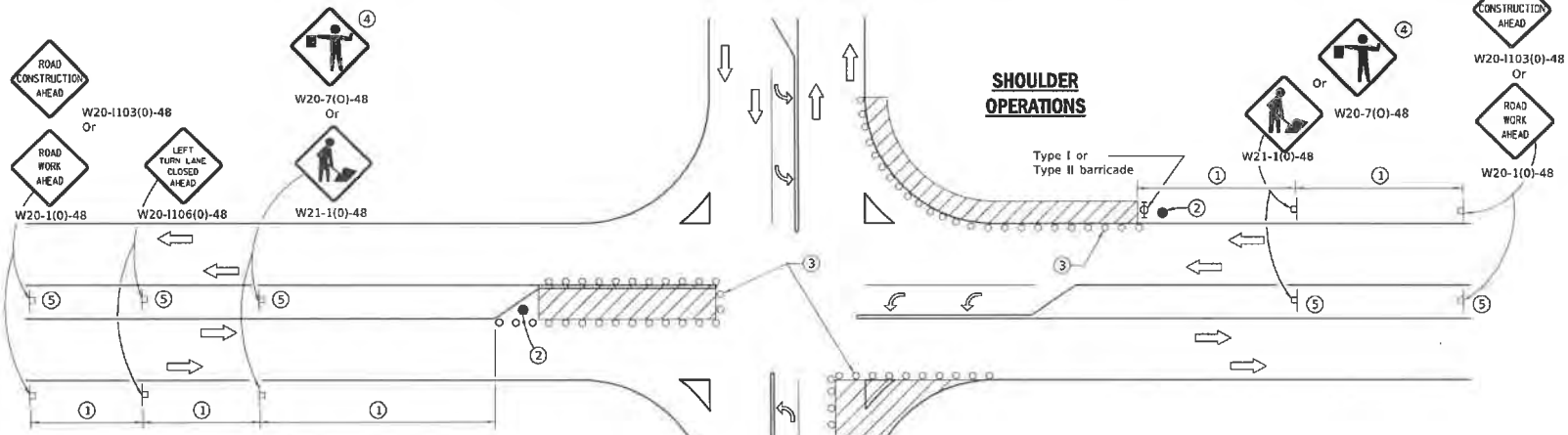

LEFT TURN LANE OR CENTER MEDIAN OPERATIONS

1. Refer to SIGN SPACING TABLE for distance.
2. Required for speed > 40 mph.
3. Cones at 25' (8 m) centers for 250' (75 m). Additional cones may be placed at 50' (15 m) centers. When drums or Type I or Type II barricades are used, the interval between devices may be doubled.
4. Use flagger sign only when flagger is present.
5. Omit this sign when median is less than 10' (3 m) or for bi-directional turn lanes.
6. Cones, drums or barricades at 20' (6 m) centers in taper.
7. Advanced arrow board required for speeds > 45 mph.
8. Three Type II barricades, drums or vertical barricades at 50' (15 m) centers.

SIGN SPACING	
Posted Speed	Sign Spacing
55	500' (150 m)
50-45	350' (100 m)
<45	200' (60 m)

SYMBOLS

- Work area
- Cone, drum or barricade
- Sign on portable or permanent support
- Arrow board
- Barricade or drum with flashing light
- Flagger with traffic control sign

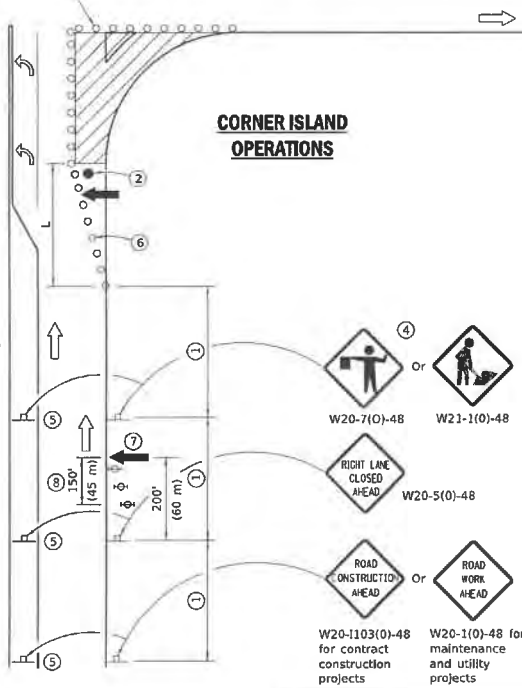

GENERAL NOTES

This Standard is used where at any time, day or night, any vehicle, equipment, workers or their activities encroach on the pavement during shoulder operations or where construction requires lane closures in an urban area.

Calculate L as follows:

SPEED LIMIT	FORMULAS English	FORMULAS (Metric)
40 mph (70 km/h) or less:	$L=\frac{WS^2}{60}$	$L=\frac{WS^2}{150}$
45 mph (80 km/h) or greater:	L=(W)(S)	L=0.65(W)(S)

W = Width of offset in feet (meters).

S = Normal posted speed mph (km/h).

All dimensions are in inches (millimeters) unless otherwise shown.

Illinois Department of Transportation

PASSED April 1, 2016
ENGINEER OF SAFETY ENGINEERING

APPROVED April 1, 2016
ENGINEER OF DESIGN AND ENVIRONMENT

ISSUED 1-1-97

DATE	REVISIONS
4-1-16	Corrected sign number for
	LEFT TURN LANE CLOSED
	AHEAD.
1-1-14	Added devices at arrow
	board upstream from taper.
	Rev. workers sign number.

URBAN LANE CLOSURE, MULTILANE INTERSECTION

STANDARD 701701-10

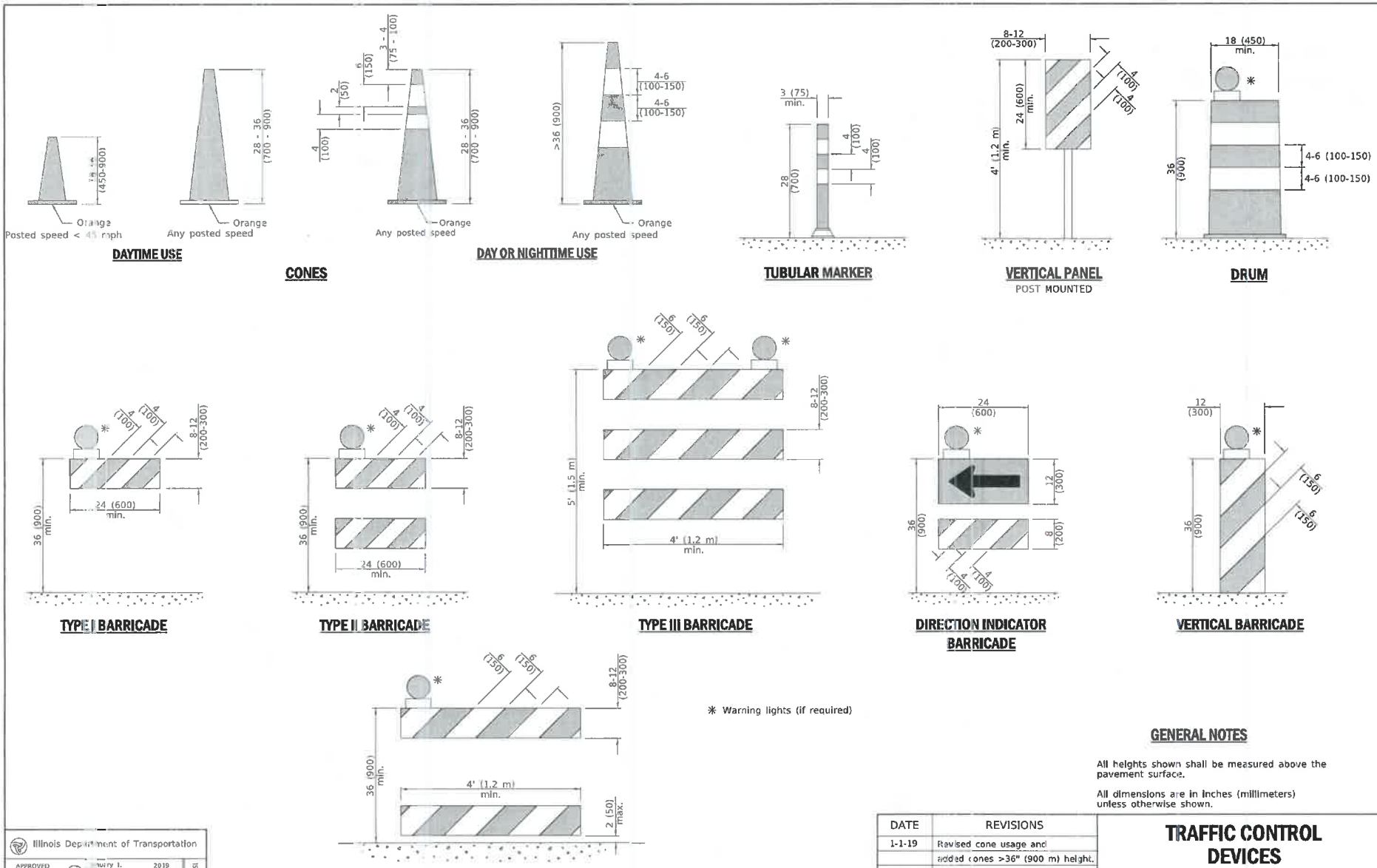

✱ Warning lights (if required)

GENERAL NOTES

All heights shown shall be measured above the pavement surface.

All dimensions are in inches (millimeters) unless otherwise shown.

Illinois Department of Transportation

APPROVED January 1, 2019
ENGINEER OF SAFETY ROADWAY ENGINEERING

APPROVED January 1, 2019
ENGINEER OF DESIGN AND ENVIRONMENT

ISSUED 1-1-19

DATE	REVISIONS
1-1-19	Revised cone usage and added cones >36" (900 m) height.
1-1-18	Revised END WORK ZONE SPEED LIMIT sign from orange to white background.

TRAFFIC CONTROL DEVICES

(Sheet 1 of 3)

STANDARD 701901-08

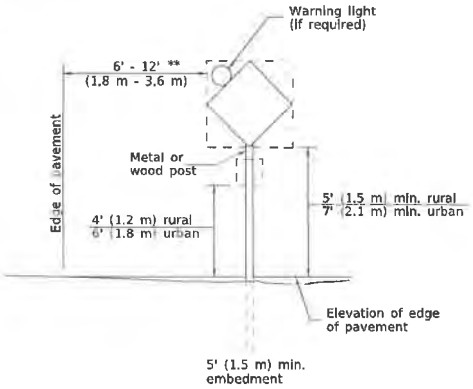

POST MOUNTED SIGNS

** When curb or paved shoulder are present this dimension shall be 24 (600) to the face of curb or 6' (1.8 m) to the outside edge of the paved shoulder.

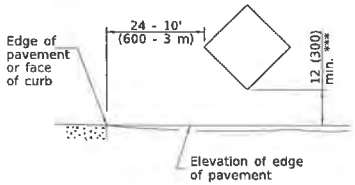

SIGNS ON TEMPORARY SUPPORTS

*** When work operations exceed four days, this dimension shall be 5' (1.5 m) min. If located behind other devices, the height shall be sufficient to be seen completely above the devices.

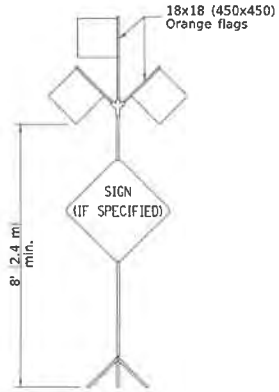

HIGH LEVEL WARNING DEVICE

W12-I103-4848

WIDTH RESTRICTION SIGN

XX'-XX" width and X miles are variable.

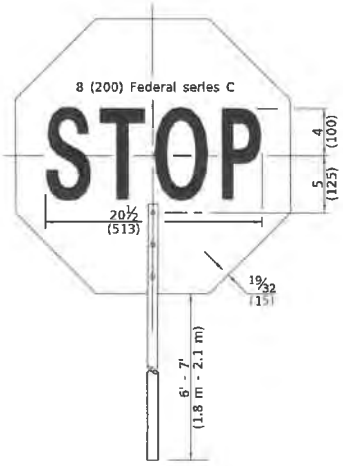

FRONT SIDE

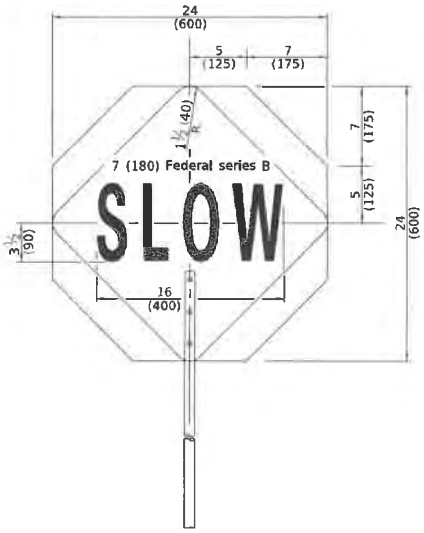

REVERSE SIDE

FLAGGER TRAFFIC CONTROL SIGN

G20-I104(0)-6036 G20-I105(0)-6024

This signing is required for all projects 2 miles (3200 m) or more in length.

ROAD CONSTRUCTION NEXT X MILES sign shall be placed 500' (150 m) in advance of project limits.

END CONSTRUCTION sign shall be erected at the end of the job unless another job is within 2 miles (3200 m).

Dual sign displays shall be utilized on multi-lane highways.

WORK LIMIT SIGNING

W21-I115(0)-3618

R2-1-3648

R10-I108p-3618 ****

R2-I106p-3618

Sign assembly as shown on Standards or as allowed by District Operations.

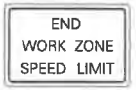

G20-I103-6036

This sign shall be used when the above sign assembly is used.

HIGHWAY CONSTRUCTION SPEED ZONE SIGNS

**** R10-I108p shall only be used along roadways under the jurisdiction of the State.

Illinois Department of Transportation

APPROVED January 1, 2019
ENGINEER OF SAFETY PROG. AND ENGINEERING

APPROVED January 1, 2019
ENGINEER OF DESIGN AND ENVIRONMENT

ISSUED 1-1-13

TRAFFIC CONTROL DEVICES

(Sheet 2 of 3)

STANDARD 701901-08

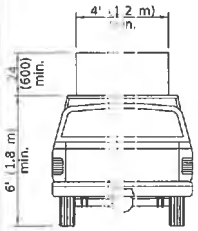

TYPE A
ROOF
MOUNTED

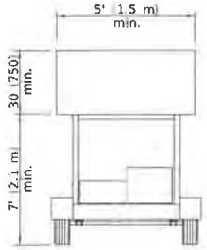

TYPE B
ROOF OR TRAILER
MOUNTED

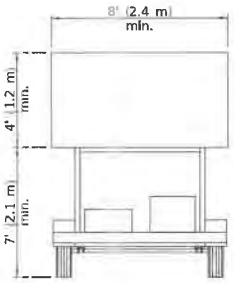

TYPE C
TRAILER
MOUNTED

ARROW BOARDS

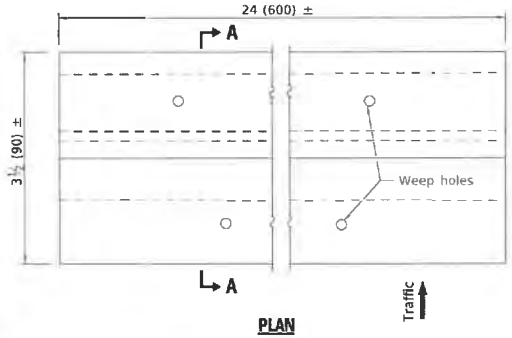

PLAN

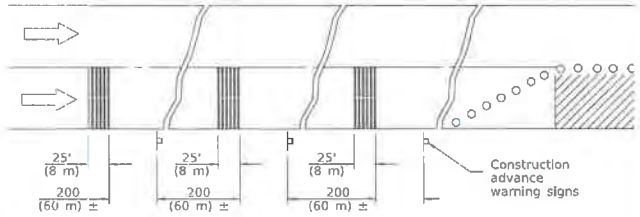

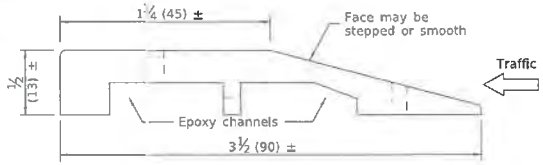

SECTION A-A

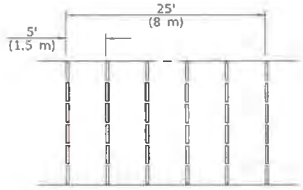

TYPICAL INSTALLATION

TEMPORARY RUMBLE STRIPS

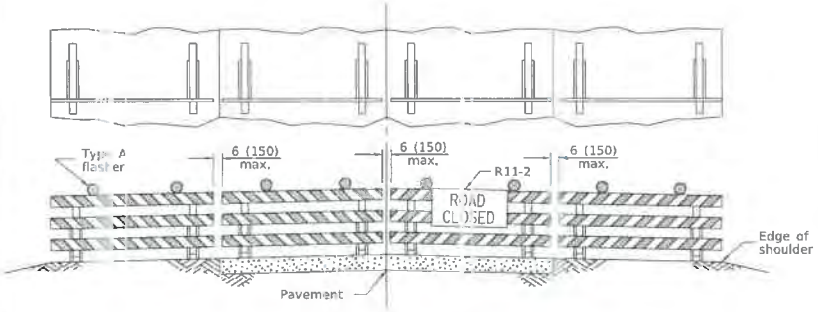

ROAD CLOSED TO ALL TRAFFIC

Reflectorized striping may be omitted on the back side of the barricades. If a Type III barricade with an attached sign panel which meets NCHRP 350 is not available, the sign may be mounted on an NCHRP 350 temporary sign support directly in front of the barricade.

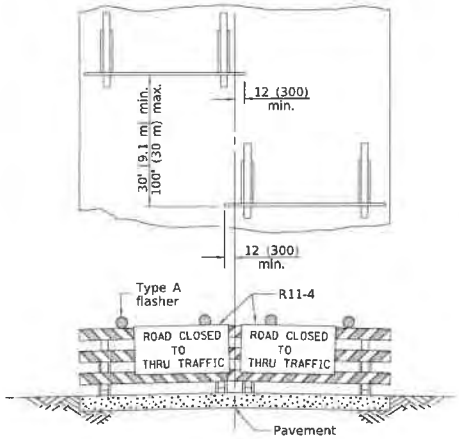

ROAD CLOSED TO THRU TRAFFIC

Reflectorized striping shall appear on both sides of the barricades. If a Type III barricade with an attached sign panel which meets NCHRP 350 is not available, the signs may be mounted on NCHRP 350 temporary sign supports directly in front of the barricade.

TYPICAL APPLICATIONS OF
TYPE III BARRICADES CLOSING A ROAD

Illinois Department of Transportation

APPROVED January 1, 2019
ENGINEER OF SAFETY, DOC, AND ENGINEERING

APPROVED January 1, 2019
ENGINEER OF DESIGN AND ENVIRONMENT

ISSUED 1-1-13

TRAFFIC CONTROL DEVICES

(Sheet 3 of 3)

STANDARD 701901-08

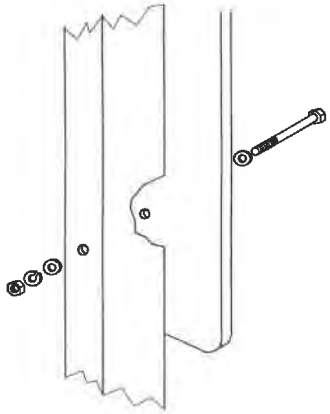

Sign panel 36 (900) wide or less

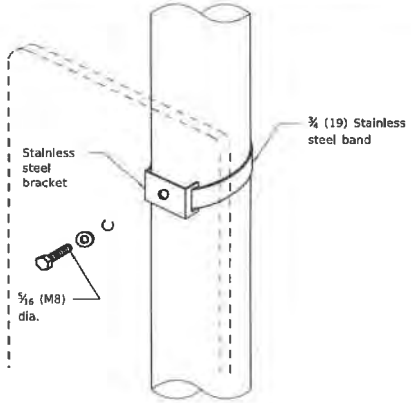

Sign panel 36 (900) wide or less

Section modulus (minimum)	Axis A	Axis B
Steel	0.050 in.³ (819 mm³)	0.105 in.³ (1720 mm³)
Aluminum	0.150 in.³ (2458 mm³)	0.315 in.³ (5162 mm³)

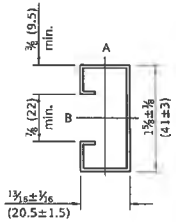

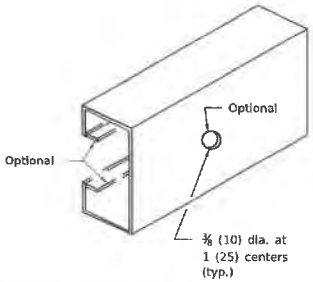

SUPPORTING CHANNEL DETAILS

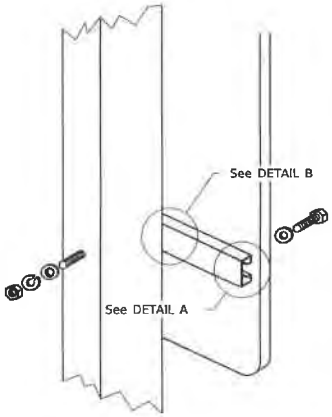

Sign panel over 36 (900) wide

WOOD OR TELESCOPING STEEL POSTS

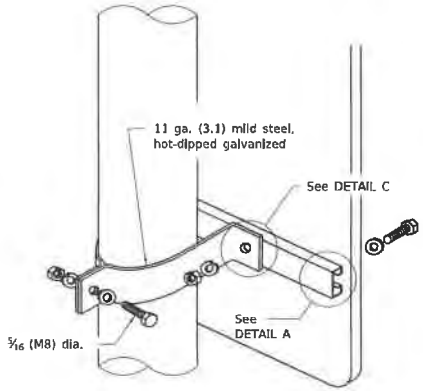

Sign panel over 36 (900) wide

LIGHT OR SIGNAL STANDARDS

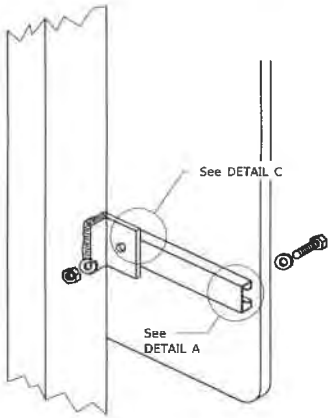

BREAKAWAY STEEL TUBING POSTS
(All sign panel sizes)

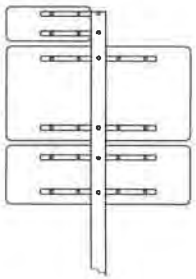

ROUTE MARKER ASSEMBLY

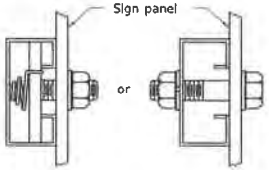

DETAIL A

DETAIL B

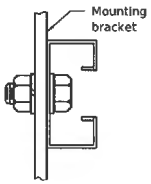

DETAIL C

All dimensions are in inches (millimeters) unless otherwise shown.

DATE	REVISIONS
1-1-09	Switched units to English (metric).
1-1-97	Renum. Standard 2319-6.

Illinois Department of Transportation

PASSED January 1, 2009
ENGINEER OF OPERATIONS
APPROVED January 1, 2009
ENGINEER OF DESIGN AND ENVIRONMENT

ISSUED 1-1-97

SIGN PANEL MOUNTING DETAILS

STANDARD 720001-01

MULTILANE HIGHWAYS

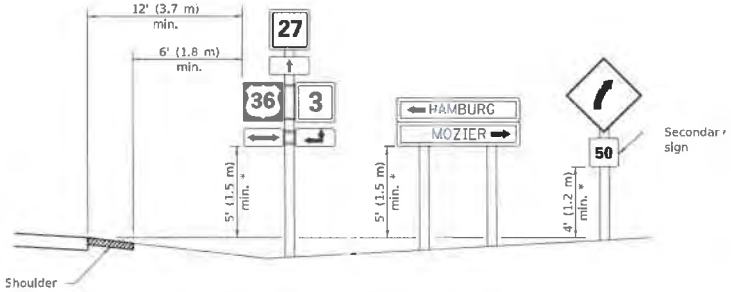

* In any area where parking is likely to occur or where there are obstructions to view or where signs are located over sidewalks, the height shall be at least 7' (2.1 m).

TWO LANE RURAL HIGHWAYS

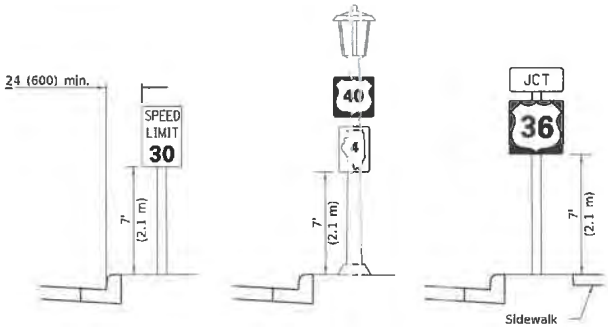

URBAN LOCATIONS

TYPICAL INSTALLATIONS

Signs in any area shall be erected to a uniform height above the edge of the pavement.

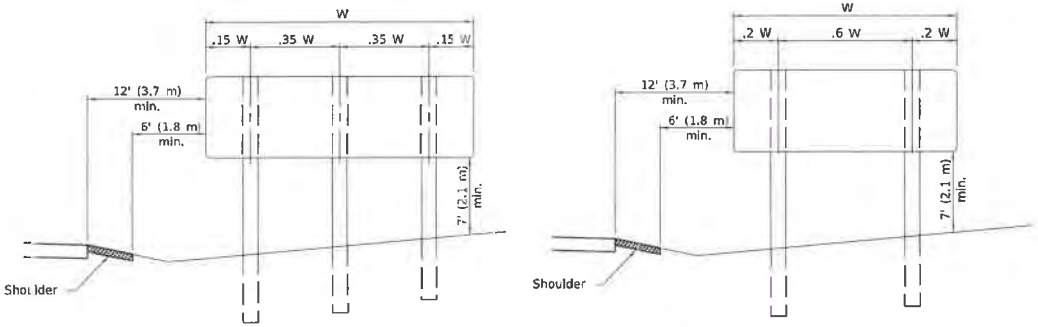

POST SPACING FOR NON-FREEWAY SIGN PANELS

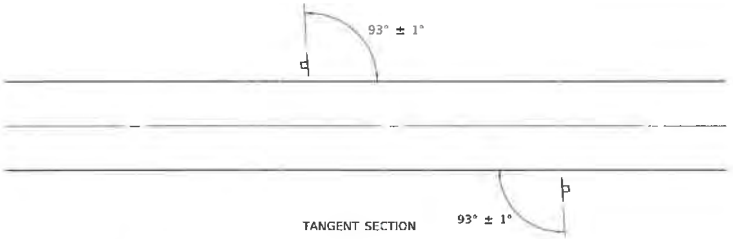

TANGENT SECTION

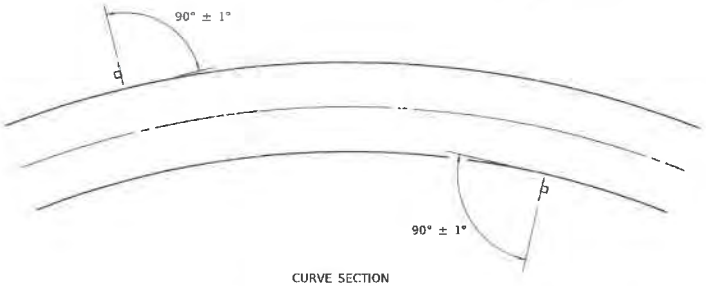

CURVE SECTION

GROUND MOUNT SIGN POSITIONING

All dimensions are in inches (millimeters) unless otherwise shown.

DATE	REVISIONS
1-1-14	Added shoulders and slopes.
	Changed sign distances
	from roadway and shoulder.
1-1-12	Rev. sign elev. for multilane
	hwy's. Revised sign elev. and
	dist. to curb for rural loc.

SIGN PANEL ERECTION DETAILS

STANDARD 720006-04

Illinois Department of Transportation

PASSED January 1, 2014
ENGINEER OF OPERATIONS

APPROVED January 1, 2014
ENGINEER OF DESIGN AND ENVIRONMENT

ISSUED 1-1-97

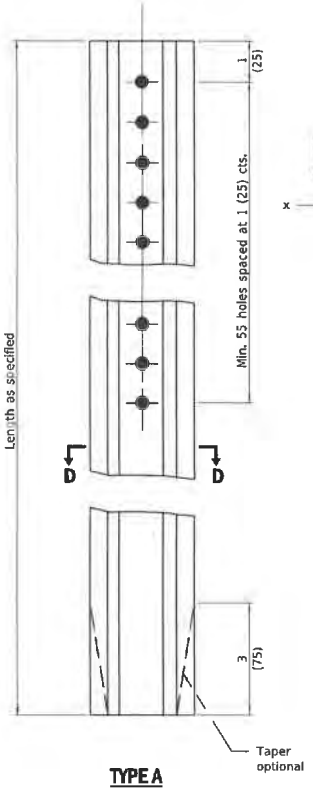

TYPE A

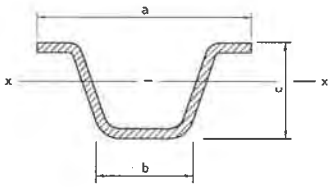

SECTION D-D

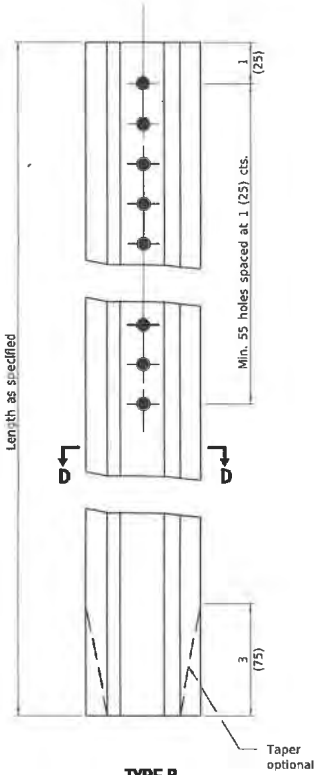

TYPE B

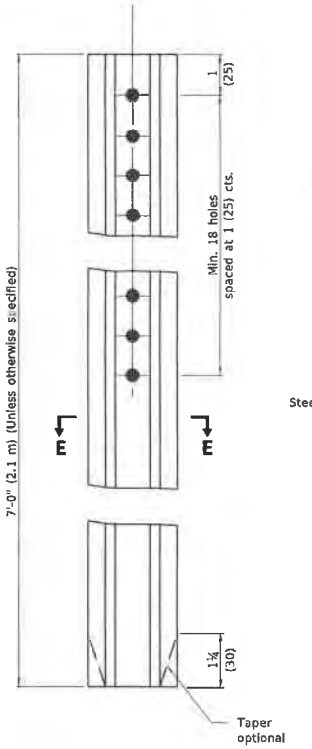

TYPE C

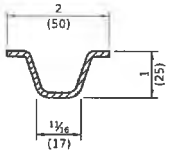

SECTION E-E

Steel - 1.12 lbs./ft. (1.67 kg/m)

		a	b	c	Sx-x in.³ (mm³)	lbs./ft. (kg/m)
TYPE A	Steel	3 1/16 (78)	1¼ (32)	1 7/16 (37)	0.223 (3,654)	2.00 (2.98)
	Aluminum	3½ (89)	1⅝ (41)	1⅞ (48)	0.435 (7,128)	0.90 (1.34)
TYPE B	Steel	3 3/16 (81)	1¼ (32)	1½ (38)	0.341 (5,588)	3.00 (4.46)
	Aluminum	4⅝ (118)	2¼ (57)	2⅜ (60)	0.888 (34,552)	1.30 (1.93)

GENERAL NOTES

Dimensions shown for cross sections are minimum.

All holes are ⅜ (10).

Sx-x is the minimum section modulus about the x-x axis of the post as shown. For posts in which holes are punched or drilled for more than half their length, Sx-x shall be computed for the net section.

All dimensions are in inches (millimeters) unless otherwise shown.

Illinois Department of Transportation

PASSED January 1, 2009
ENGINEER OF POLICY AND PROCEDURES
APPROVED January 1 2009
ENGINEER OF DESIGN AND ENVIRONMENT

ISSUED 1-1-97

DATE	REVISIONS
1-1-09	Switched units to English (metric).
1-1-97	Renum. Standard 2350-4.

METAL POSTS FOR SIGNS, MARKERS & DELINEATORS

STANDARD 720011-01

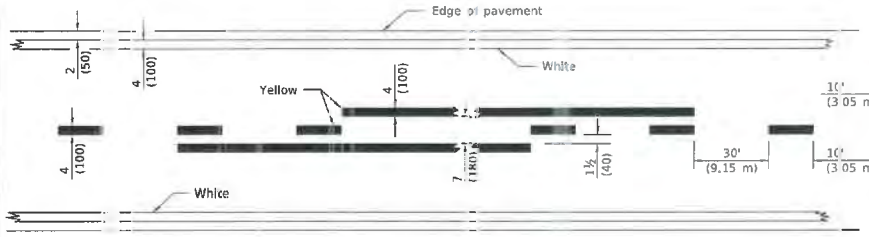

2 LANE

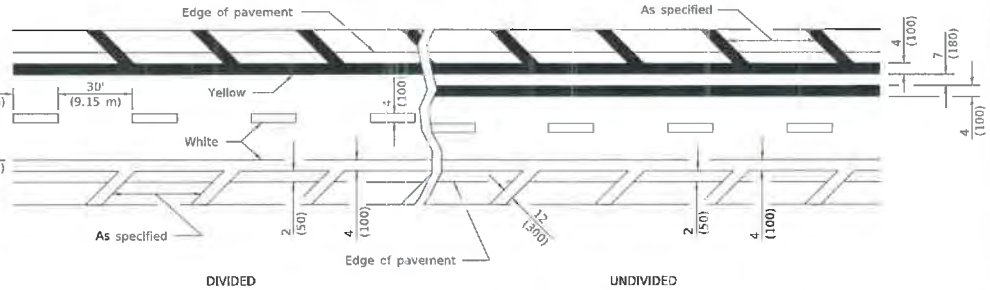

MULTI LANE

LANE AND EDGE LINES

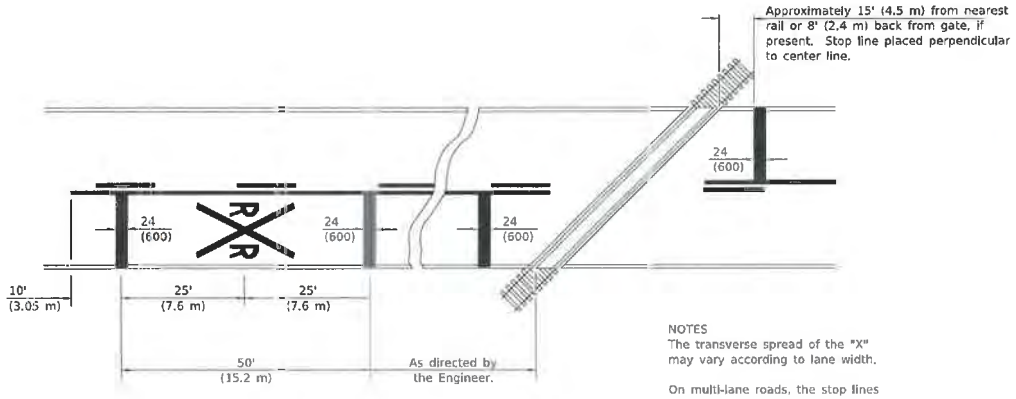

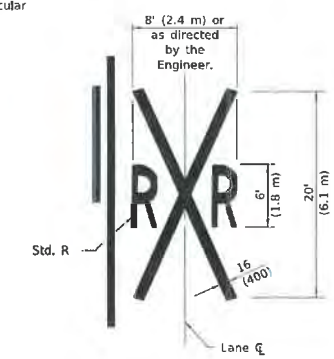

NOTES
The transverse spread of the "X" may vary according to lane width.

On multi-lane roads, the stop lines shall extend across all approach lanes and separate RXR symbols shall be placed adjacent to each other in each lane.

When the pavement marking symbol is used, a portion of the symbol should be located directly adjacent to the Advance Warning Sign (W10-1) as placed by Table 2C-4, Condition B of the MUTCD.

PAVEMENT MARKINGS AT RAILROAD-HIGHWAY GRADE CROSSING

All dimensions are in inches (millimeters) unless otherwise shown.

Illinois Department of Transportation

PASSED January 1, 2015
ENGINEER OF OPERATIONS
APPROVED January 1, 2015
ENGINEER OF DESIGN AND ENVIRONMENT

TSSUK3 1-1-87

DATE	REVISIONS
1-1-15	Added symbols. Revised
	bike symbol. Revised note
	for stop line at RR crossing.
1-1-14	Added bike symbol. Renamed
	'LANE DROP ARROW' detail to
	'LANE-REDUCTION ARROW'.

TYPICAL PAVEMENT MARKINGS

(Sheet 1 of 3)

STANDARD 780001-05

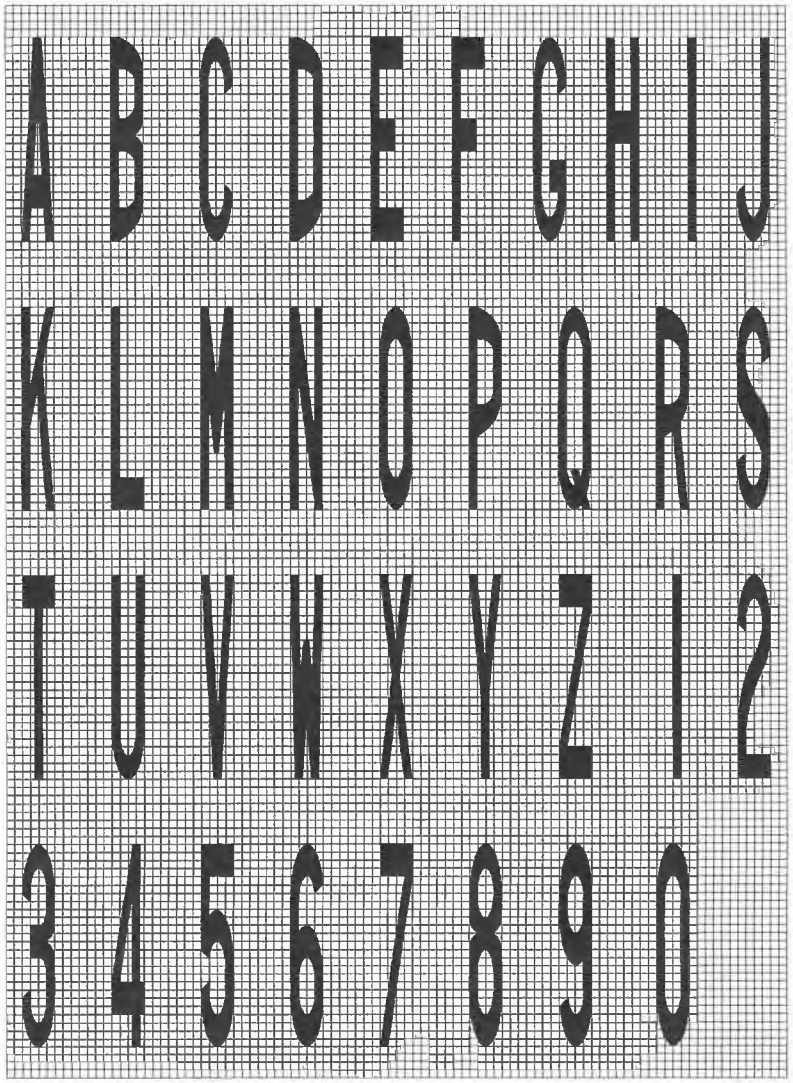

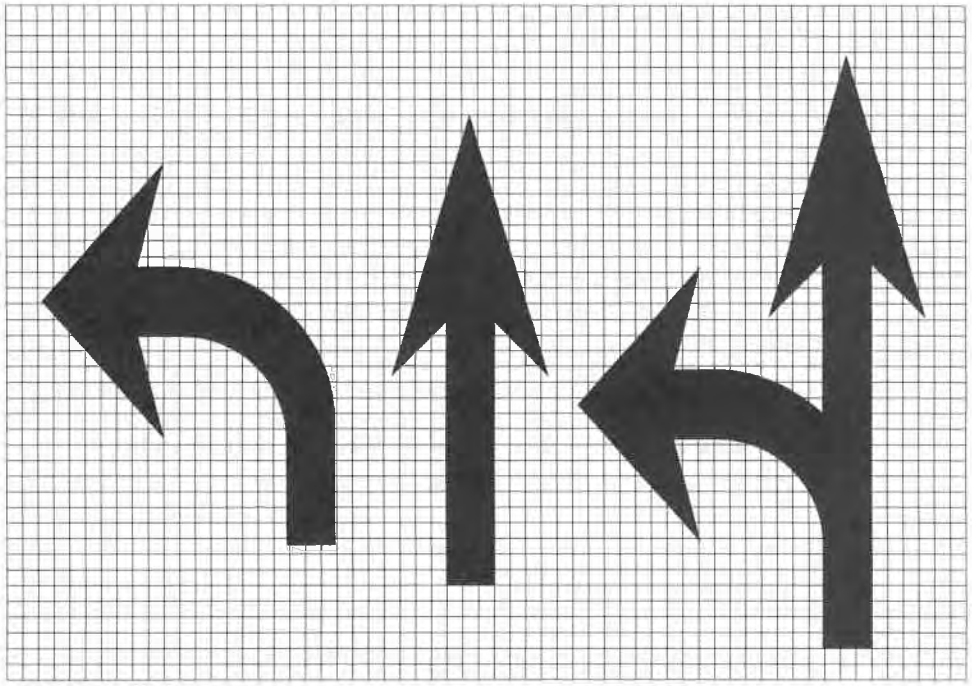

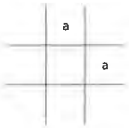

Legend Height	Arrow Size	a
6' (1.8 m)	Small	2.9 (74)
8' (2.4 m)	Large	3.8 (96)

The space between adjacent letters or numerals should be approximately 3 (75) for 6' (1.8 m) legend and 4 (100) for 8' (2.4 m) legend.

LETTER AND ARROW GRID SCALE

Illinois Department of Transportation

PASSED January 1, 2015
ENGINEER OF OPERATIONS

APPROVED January 1, 2015
ENGINEER OF DESIGN AND ENVIRONMENT

ISSUED 1-1-97

TYPICAL PAVEMENT MARKINGS

(Sheet 2 of 3)

STANDARD 780001-05

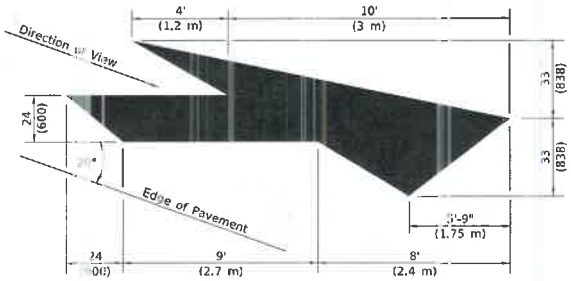

LANE-REDUCTION ARROW

Right lane-reduction arrow shown.
Use mirror image for left lane.

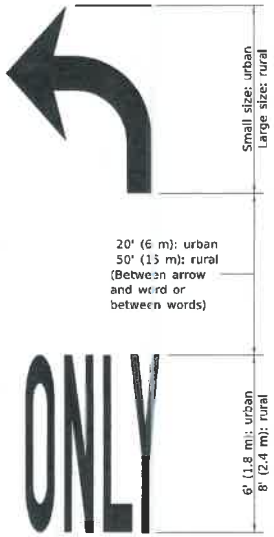

WORD AND ARROW LAYOUT

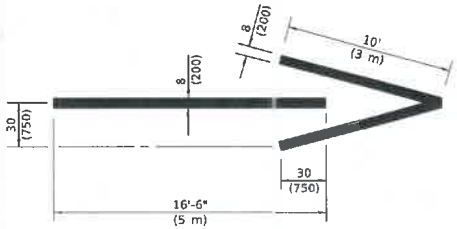

WRONG WAY ARROW

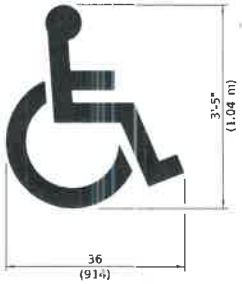

INTERNATIONAL SYMBOL OF ACCESSILITY

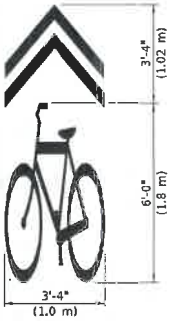

SHARED LANE SYMBOL

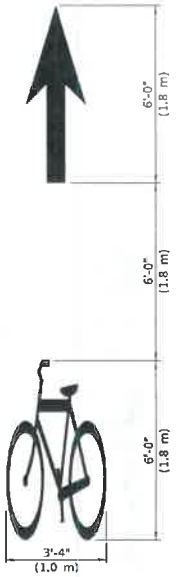

BIKE SYMBOL

(Arrow is optional.)

Illinois Department of Transportation

PASSED January 1, 2015
ENGINEER OF OPERATIONS

APPROVED January 1, 2015
ENGINEER OF DESIGN AND ENVIRONMENT

ISSUED 1-1-97

TYPICAL PAVEMENT MARKINGS

(Sheet 3 of 3)

STANDARD 780001-05

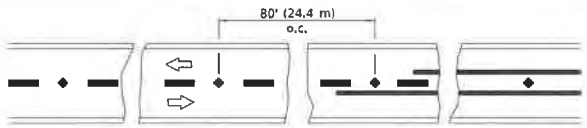

Reduce to 40' (12.2 m) o.c. on curves with posted or advisory speeds of 45 mph (70 km/h) or less.

TWO-LANE / TWO-WAY

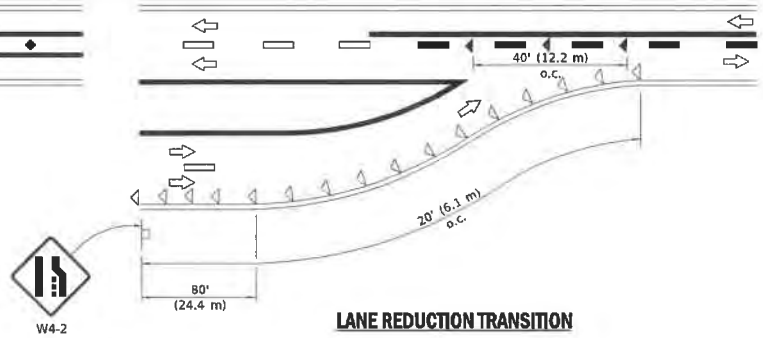

LANE REDUCTION TRANSITION

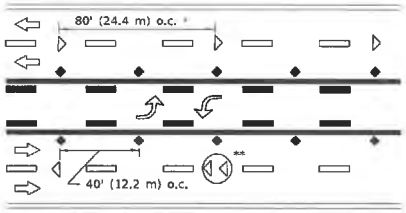

*,** See MULTI LANE DIVIDED detail for lane marker notes.

TWO-WAY LEFT TURN

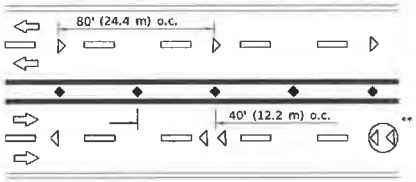

*,** See MULTI LANE DIVIDED detail for lane marker notes.

MULTI-LANE UNDIVIDED

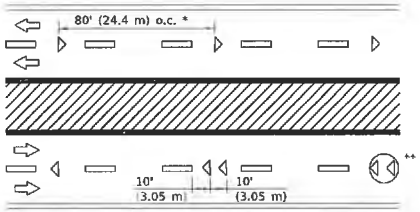

* Reduce to 40' (12.2 m) o.c. on curves where advisory speeds are 10 mph (15 km/h) lower than posted speeds.

** Where double lane line markers are specified, they shall be spaced as shown.

MULTI-LANE DIVIDED

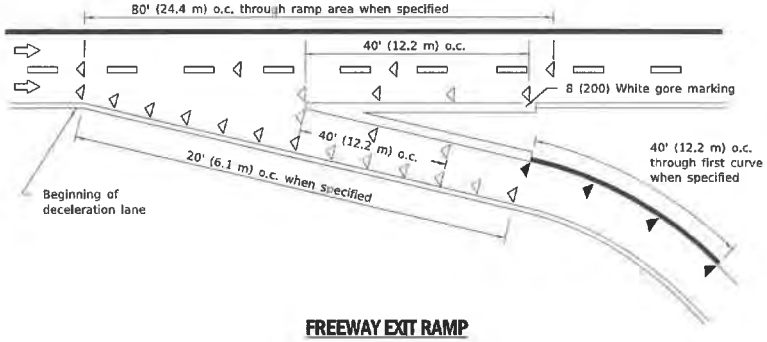

FREEWAY EXIT RAMP

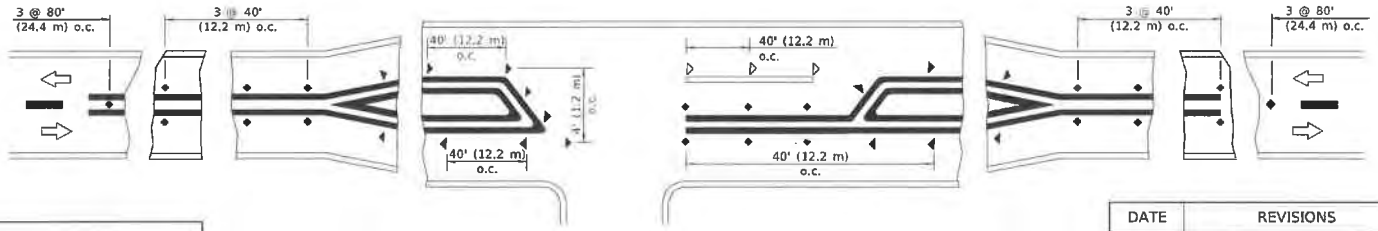

RURAL LEFT TURN

SYMBOLS

- Yellow stripe
- White stripe
- One-way amber marker
- One-way crystal marker
- Two-way amber marker

All dimensions are in inches (millimeters) unless otherwise shown.

Illinois Department of Transportation

PASSED April 1, 2016
ENGINEER OF OPERATIONS
APPROVED Aug. 1 2016
ENGINEER OF DESIGN AND ENVIRONMENT

ISSUED 1-1-97

DATE	REVISIONS
4-1-16	Revised LANE ENDS sign
	W4-2 to agree with current
	MUTCD.
1-1-09	Switched units to
	English (metric).

TYPICAL APPLICATIONS RAISED REFLECTIVE PAVEMENT MARKERS

STANDARD 781001-04

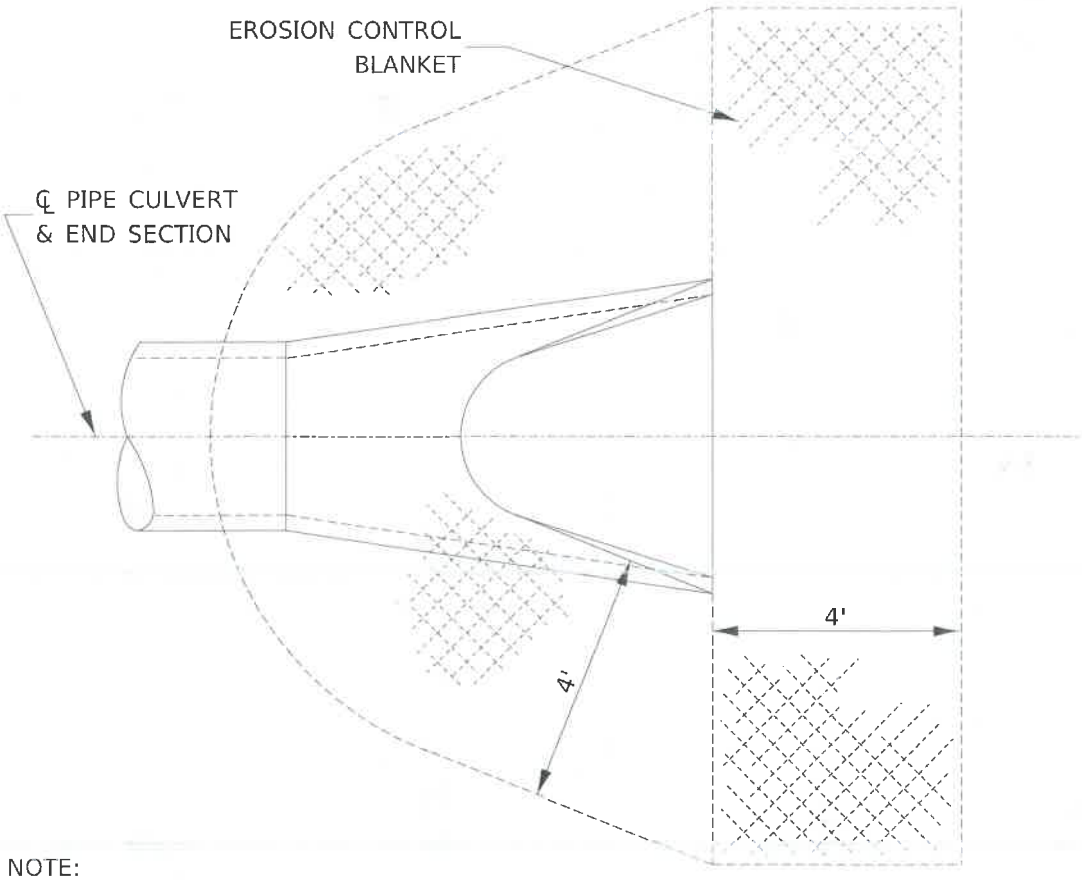

NOTE:
TO BE USED AT ALL END SECTIONS

DETAIL OF EROSION CONTROL BLANKET LINING AROUND END SECTION

251-2

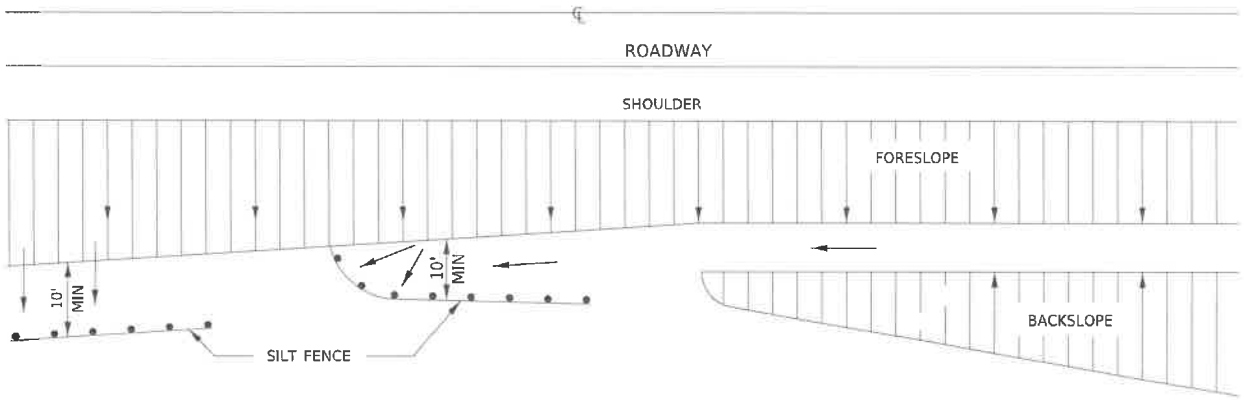

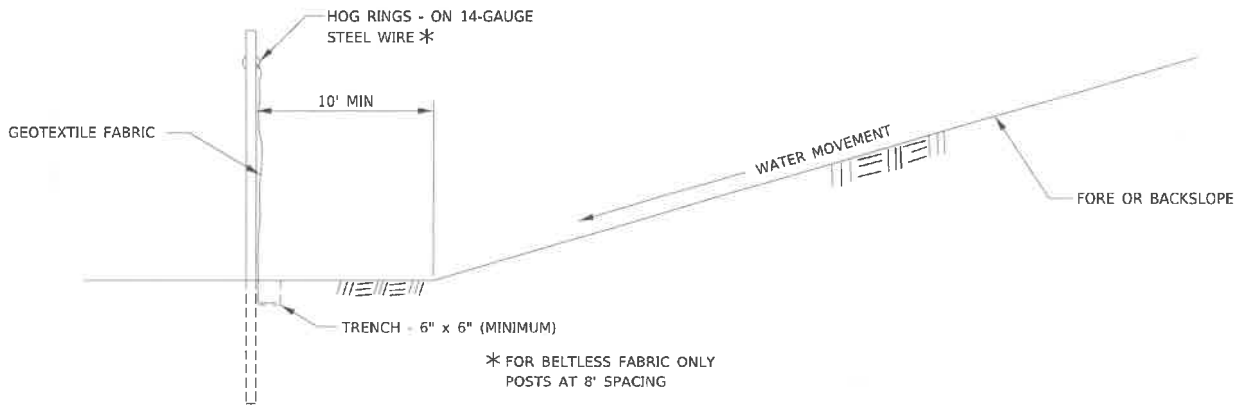

DETAILS OF SILT FENCE

EROSION CONTROL DETAILS FOR SILT FENCE

280-1

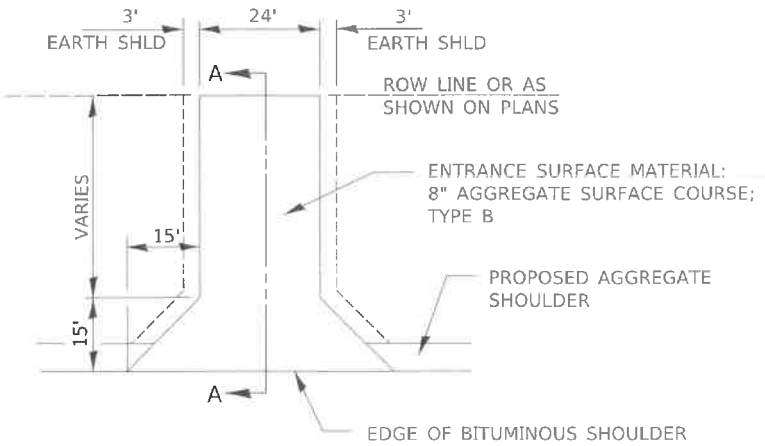

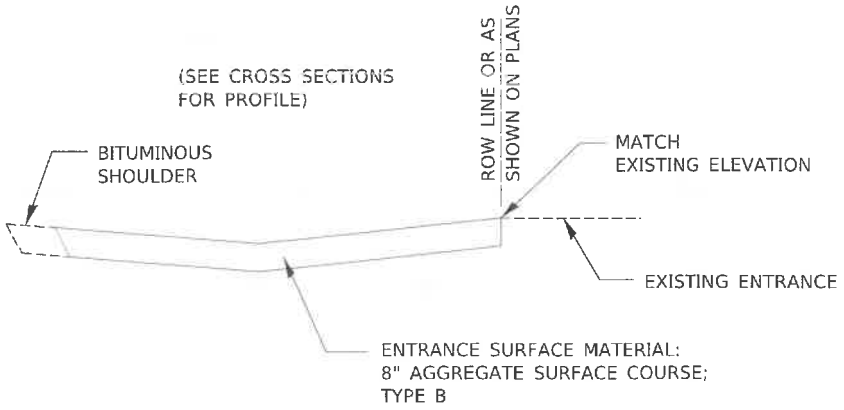

SECTION A-A

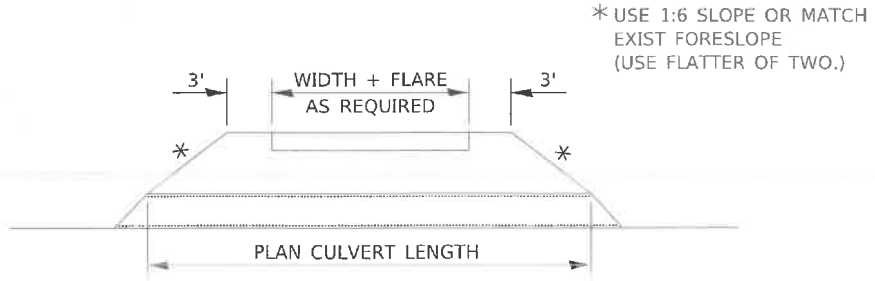

FIELD ENTRANCE DETAIL

402-1

DESIGNER NOTE: TO BE USED ON 3R PROJECTS WHEN REPLACING CULVERTS AND CONSTRUCTING NEW DITCHES.

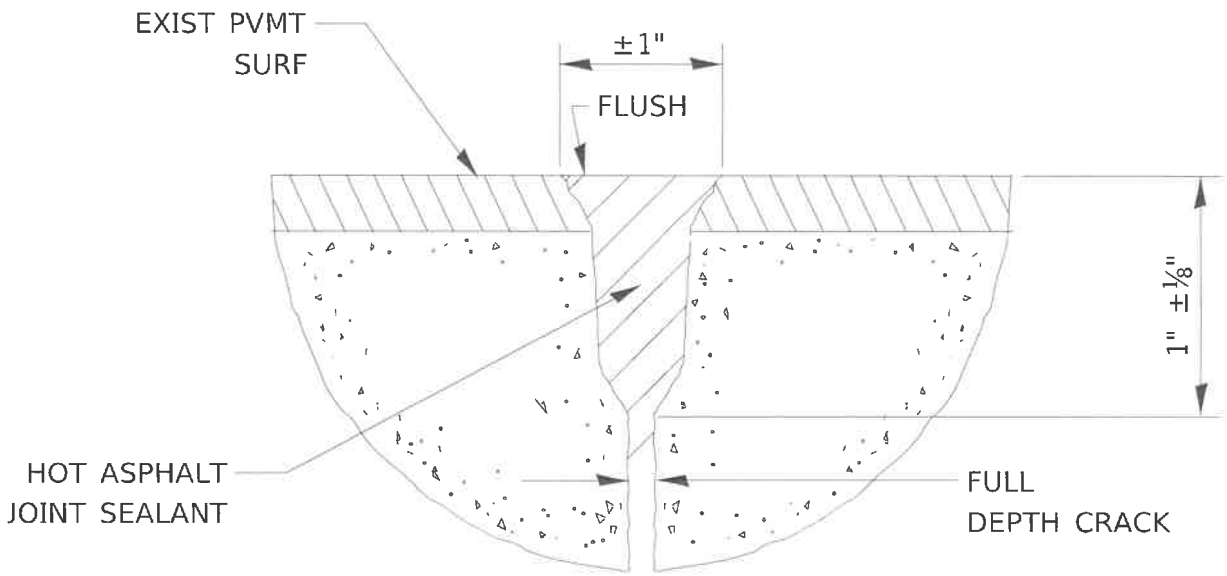

ROUTING & SEALING JOINTS

(CENTERLINE & TRANSVERSE PATCH BOUNDARIES)

420-3

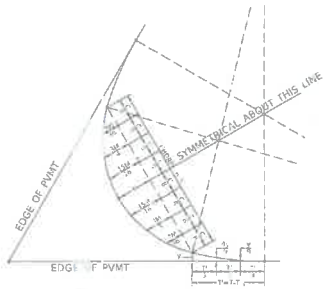

FIELD LAYOUT METHOD

SYMMETRICAL CURVES

CURVE #							
R_1							
R_2							
R_3							
O							
Δ							
T							
T_1							
T_2							
T'							
y							
$\frac{3y}{8}$							
$\frac{y}{8}$							
M							
$\frac{15M}{16}$							
$\frac{3M}{4}$							
$\frac{7M}{16}$							
C							

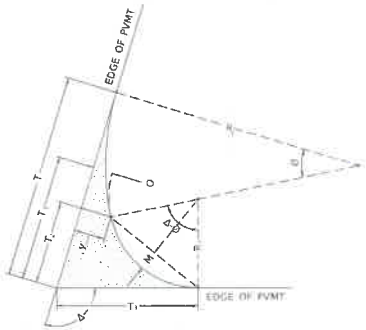

TWO CENTER CURVES

CURVE #							
R_1							
R_2							
O							
Δ							
T							
T_1							
T_2							
T_3							
y							
$\frac{3y}{8}$							
$\frac{y}{8}$							
M							
$\frac{15M}{16}$							
$\frac{3M}{4}$							
$\frac{7M}{16}$							
C							

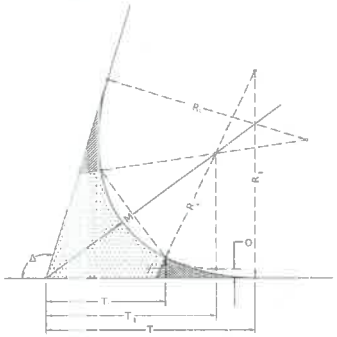

FOR SYMMETRICAL CURVES

TWO AND THREE CENTER CURVE DATA

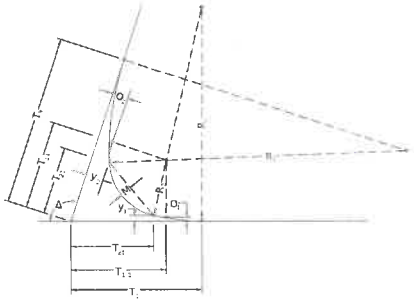

FOR ASYMMETRICAL CURVES

ASYMMETRICAL CURVES

CURVE #							
R_1							
R_2							
R_3							
O_1							
O_2							
Δ							
T							
T_1							
T_2							
T_3							
T_4							
T_5							
T_6							
T_7							
T_8							
T_9							
T_{10}							
y							
$\frac{3y}{8}$							
$\frac{y}{8}$							
M							
$\frac{15M}{16}$							
$\frac{3M}{4}$							
$\frac{7M}{16}$							
C							

ASYMMETRICAL THREE CENTER CURVES

420-5

USER NAME =	DESIGNED -	REVISED -	STATE OF ILLINOIS DEPARTMENT OF TRANSPORTATION				F.A. RTE.	SECTION	COUNTY	TOTAL SHEETS	SHEET NO.
	DRAWN -	REVISED -									
PLOT SCALE = 50.000' / in	CHECKED -	REVISED -							CONTRACT NO.		
PLOT DATE = 4/18/2018	DATE -	REVISED -		SCALE:	SHEET OF SHEETS	STA. TO STA.			FED. AID PROJECT		

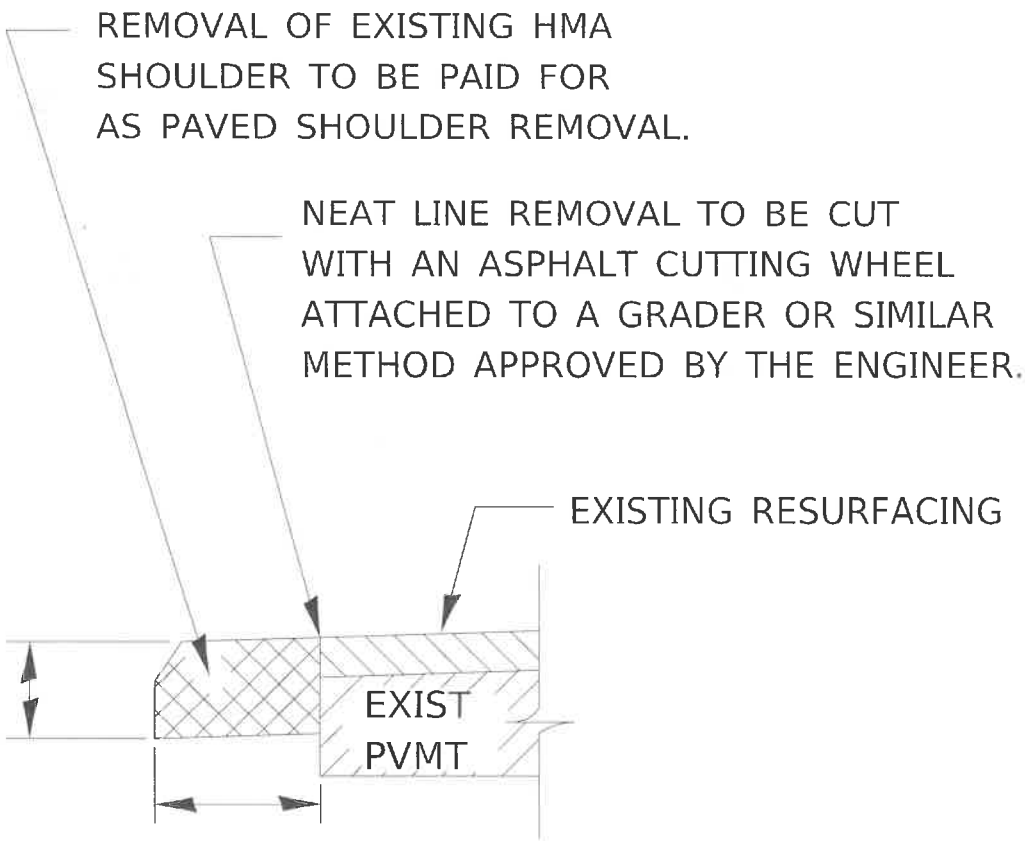

REMOVAL OF EXISTING HMA SHOULDER

440-1

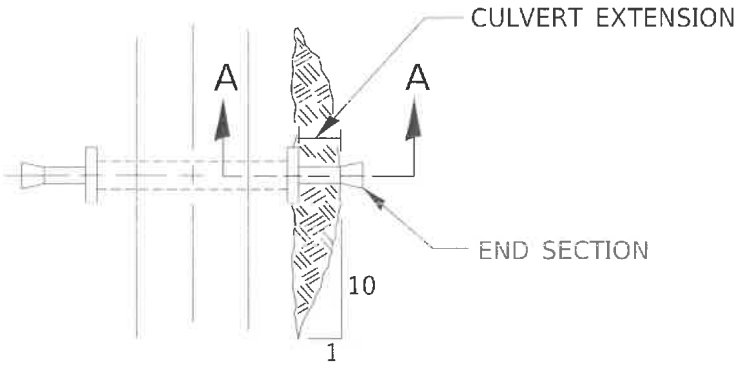

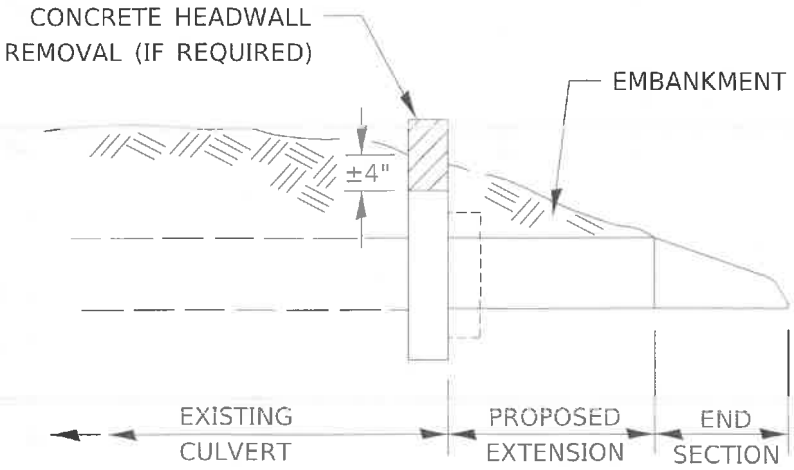

SECTION A-A

PLAN AT CULVERT EXTENSIONS

540-13

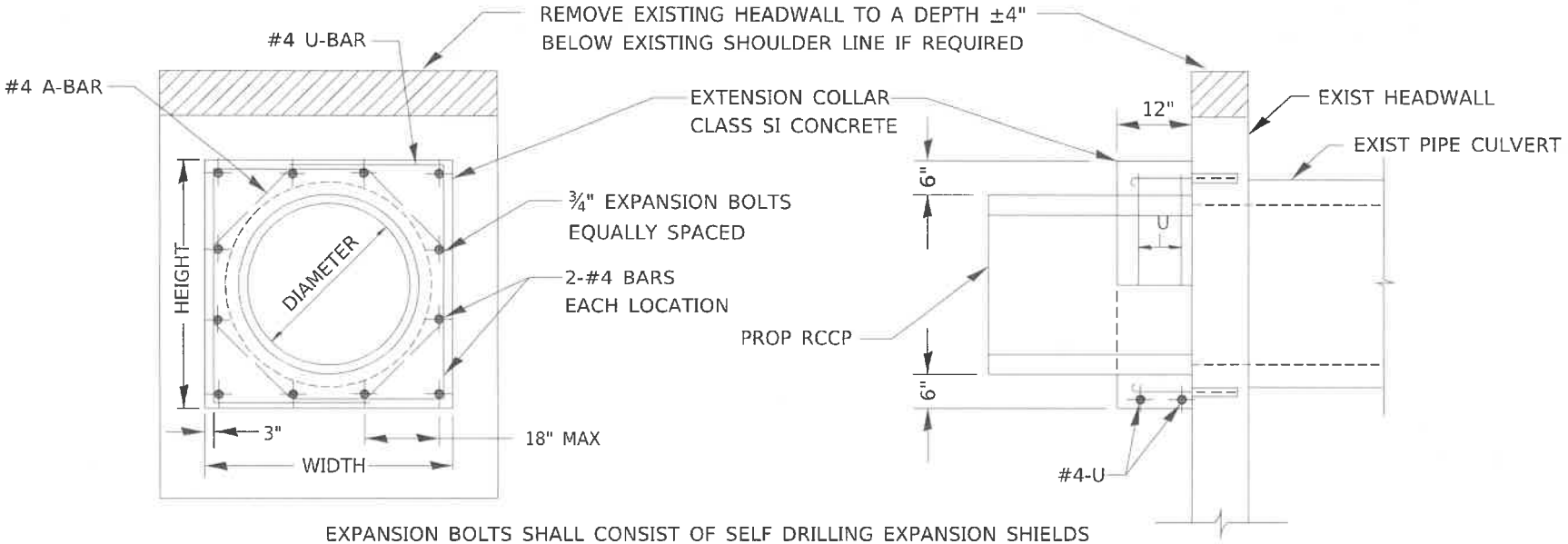

EXPANSION BOLTS SHALL CONSIST OF SELF DRILLING EXPANSION SHIELDS AND ¾" DIA HOOKED BOLTS. HOOKED BOLTS SHALL EXTEND A MINIMUM OF 9" INTO NEW CONCRETE.
MINIMUM CERTIFIED PROOF LOAD = 4,080 LBS

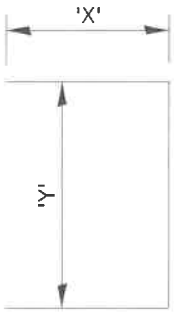

U-BAR

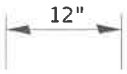

A-BAR

LOCATION	EXISTING CULVERT SIZE	PIPE DIMENSION	PIPE AREA	EXTENSION COLLAR		A-BAR	U-BAR		QUANTITIES ARE FOR ONE SIDE ONLY		
				WIDTH	HEIGHT	12	'X'	'Y'	CLASS SI CONC COLLAR	REINFORCEMENT BARS	¾" DIA EXPANSION BOLTS
	DIA IN	DIA IN	SQ FT	IN	IN	IN	IN	IN	CU YD	POUND	EACH

COLLAR DETAIL (R.C.C.P. EXTENSION OF PIPE CULVERT)

542-1

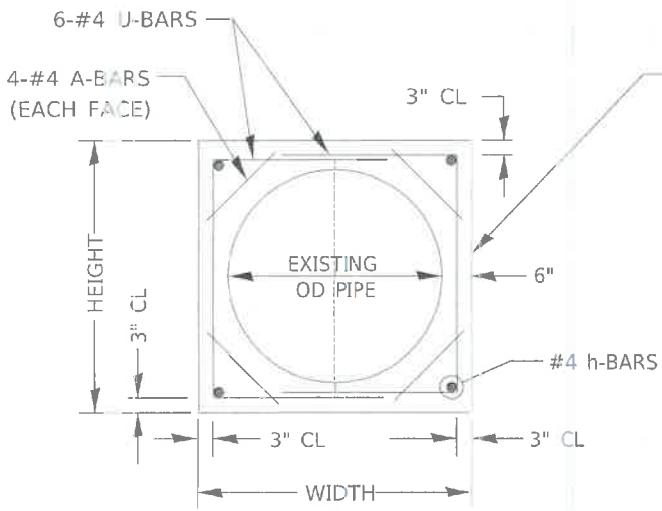

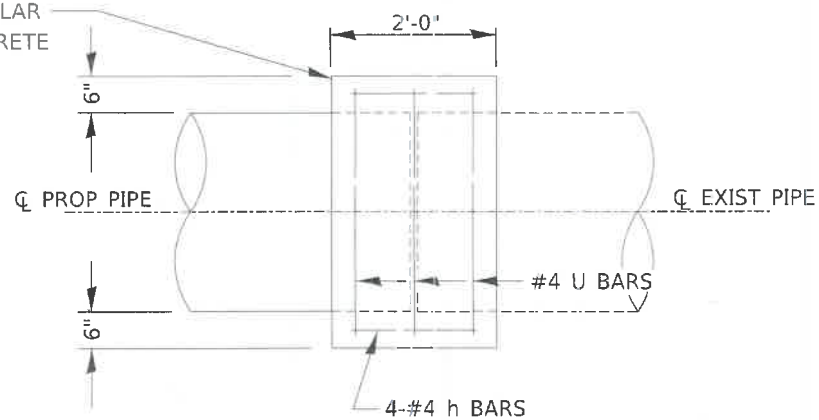

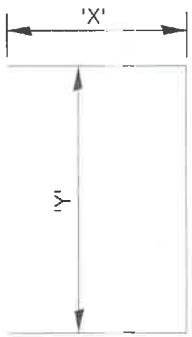

U-BAR

h-BAR

A-BAR

LOCATION	EXISTING CULVERT SIZE	EXTENSION COLLAR		A-BAR	U-BAR		h-BAR	CONC COLLAR	REINFORCEMENT BARS
		WIDTH	HEIGHT	12	'X'	'Y'	18		
	FT x FT	IN	IN	IN	IN	IN	IN.	CU YD	POUND

COLLAR DETAIL (DIRECT PIPE CULVERT EXTENSION)

542-3

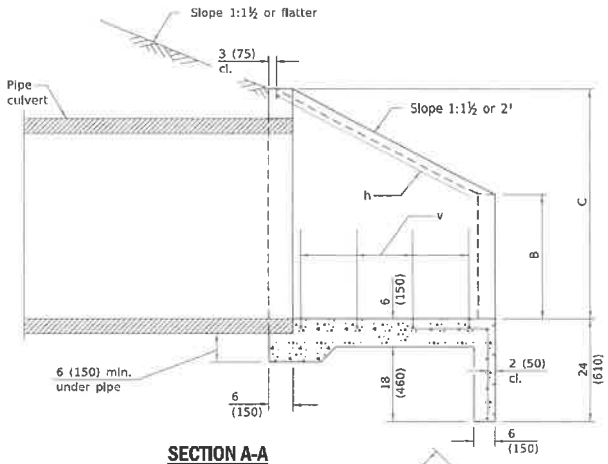

SECTION A-A

DIMENSIONS OF BARS-h to h_9

Bar	a	b
h	22 (560)	29½ (750)
h_1	22 (560)	38½ (980)
h_2	25 (640)	29½ (750)
h_3	25 (640)	38½ (980)
h_4	33 (840)	39 (990)
h_5	33 (840)	4'-1½" (1.26 m)
h_6	39 (990)	3'-10½" (1.18 m)
h_7	39 (990)	4'-10½" (1.50 m)
h_8	3'-11" (1.19 m)	4'-8" (1.42 m)
h_9	3'-11" (1.19 m)	5'-9½" (1.77 m)

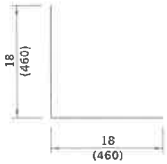

BAR v

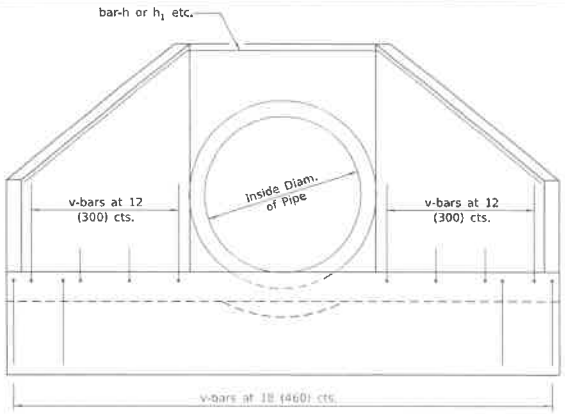

END VIEW

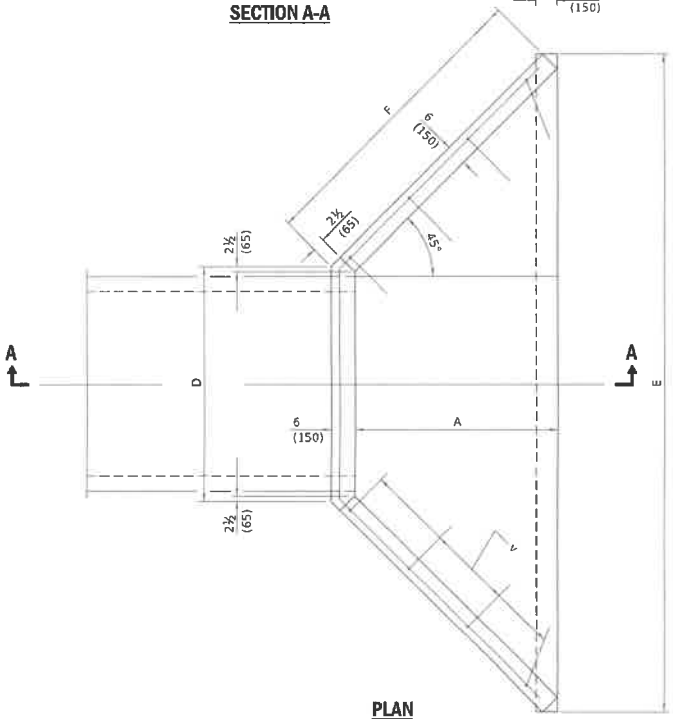

PLAN

DIMENSIONS AND QUANTITIES

Design No.	Nominal Inside Dia. of Pipe	Slope of Wing Walls	Dimensions A	B	C	D	E	F	Concrete 2 End Secs. cu. yds. (m^3)	Reinforcement Bars - No. 4 (No. 13) h-Bars Bar	Length	v-Bars No.	Total Wt. 2 End Secs. lbs. (kg)
D15-1½ (D375-1½)	15 (375)	1:1½	19 (485)	10 (260)	23 (590)	24 (610)	5'-5½" (1.67 m)	29½ (750)	0.9 (0.7)	h	6'-9" (2.06 m)	16	40 (18.1)
D15-2 (D375-2)	15 (375)	1:2	26 (660)	10 (260)	23 (590)	24 (610)	6'-7½" (2.02 m)	3'-3¼" (1 m)	1.2 (0.9)	h_1	8'-3" (2.52 m)	22	60 (27.2)
D18-1½ (D450-1½)	18 (450)	1:1½	19 (485)	13 (330)	26 (660)	27 (690)	5'-8½" (1.75 m)	29½ (750)	1.3 (1.0)	h_2	7'-0" (2.14 m)	16	40 (18.1)
D18-2 (D450-2)	18 (450)	1:2	26 (660)	13 (330)	26 (660)	27 (690)	6'-10½" (2.11 m)	3'-3¼" (1 m)	1.3 (1.0)	h_3	8'-6" (2.6 m)	22	60 (27.2)
D24-1½ (D600-1½)	24 (600)	1:1½	25 (640)	16 (410)	33 (840)	35 (890)	7'-4½" (2.26 m)	38 (970)	1.5 (1.1)	h_4	9'-3" (2.82 m)	22	60 (27.2)
D24-2 (D600-2)	24 (600)	1:2	34 (865)	16 (410)	33 (840)	35 (890)	8'-10½" (2.72 m)	4'-2½" (1.29 m)	2.0 (1.5)	h_5	11'-0" (3.24 m)	28	70 (31.8)
D30-1½ (D750-1½)	30 (750)	1:1½	30 (770)	19 (480)	39 (990)	3'-5" (1.05 m)	8'-8½" (2.68 m)	3'-9" (1.15 m)	2.0 (1.5)	h_6	11'-0" (3.39 m)	28	70 (31.8)
D30-2 (D750-2)	30 (750)	1:2	3'-4" (1.01 m)	19 (480)	39 (990)	3'-5" (1.05 m)	10'-4½" (3.17 m)	4'-11" (1.5 m)	2.6 (2.0)	h_7	13'-0" (3.99 m)	34	80 (36.3)
D36-1½ (D900-1½)	36 (900)	1:1½	36 (915)	22 (560)	3'-10" (1.17 m)	4'-1" (1.25 m)	10'-4½" (3.17 m)	4'-5½" (1.36 m)	2.6 (2.0)	h_8	13'-3" (4.03 m)	30	80 (36.3)
D36-2 (D900-2)	36 (900)	1:2	4'-0" (1.22 m)	22 (560)	3'-10" (1.17 m)	4'-1" (1.25 m)	12'-4½" (3.78 m)	5'-10½" (1.79 m)	3.5 (2.7)	h_9	15'-6" (4.73 m)	40	100 (45.4)

* If embankment slope above headwall is flatter than 1:2, provide wings for 1:2 slope.

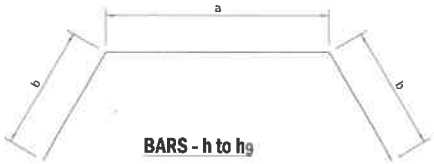

BARS - h to h_9

Bend in field
one required in each headwall

GENERAL NOTES

All slope ratios are expressed as units of vertical displacement to units of horizontal displacement (V:H).

All dimensions are in inches (millimeters) unless otherwise shown.

542-14

USER NAME = pdhenry	DESIGNED -	REVISED -
	DRAWN -	REVISED -
PLOT SCALE = 50.000 ' / in.	CHECKED -	REVISED -
PLOT DATE = 9/11/2019	DATE -	REVISED -

STATE OF ILLINOIS
DEPARTMENT OF TRANSPORTATION

REINFORCED CONCRETE END SECTIONS FOR PIPE CULVERTS
15" (375 mm) THRU 36" (900 mm) DIA. AT RIGHT ANGLES WITH ROADWAY

SCALE: | SHEET OF SHEETS | STA. TO STA.

F.A. RTE. | SECTION | COUNTY | TOTAL SHEETS | SHEET NO.
CONTRACT NO.
LETT. (IL 60 PROJECT)

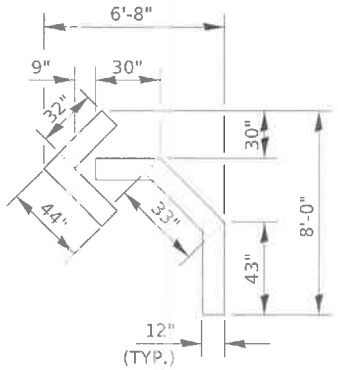

QUANTITY

12" LINE = 16 LIN FT

OR 4" LINE = 48 LIN FT

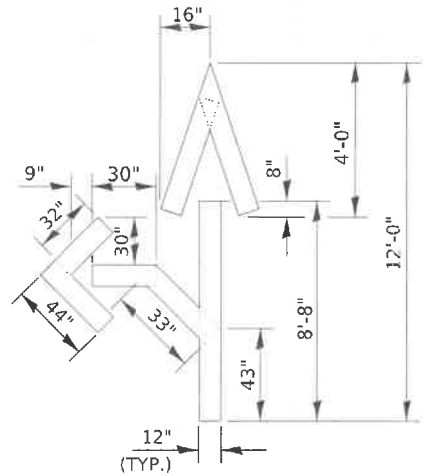

QUANTITY

12" LINE = 29 LIN FT

OR 4" LINE = 87 LIN FT

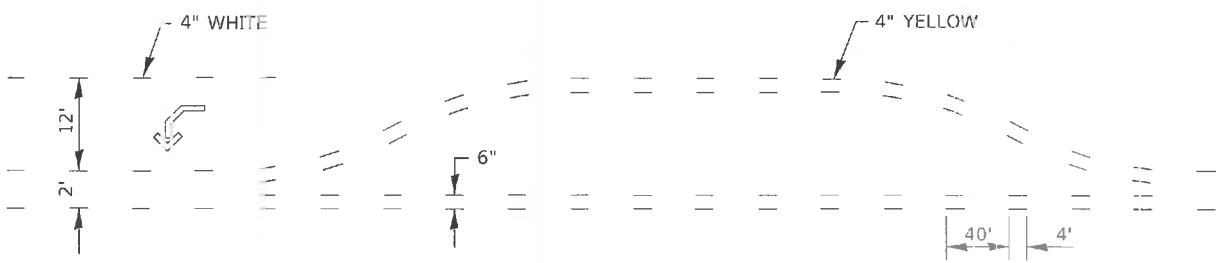

SHORT-TERM PAVEMENT MARKING FOR MEDIANS AND ARROWS

703-1

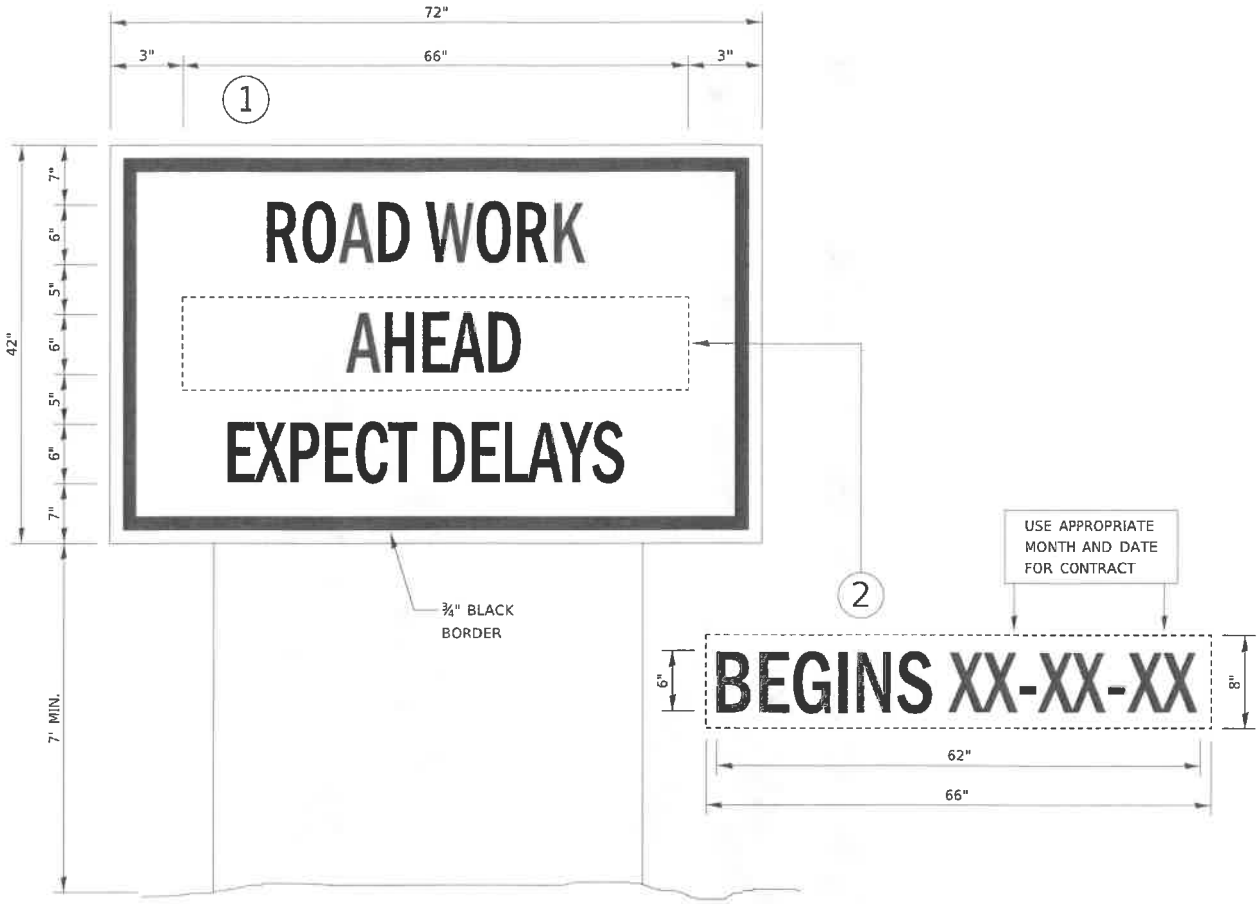

TEMPORARY INFORMATION SIGNING

NOTES:

1. USE 6" D BLACK LETTERING ON FLUORESCENT ORANGE BACKGROUND.
2. ERECT SIGNS AT LOCATIONS IN ADVANCE OF THE "ROAD CONSTRUCTION AHEAD" SIGNS AS DIRECTED BY THE ENGINEER.
3. ERECT SIGN (1) WITH INSTALLED PANEL (2) A MINIMUM OF ONE WEEK PRIOR TO THE START OF THE LANE CLOSURE.
4. REMOVE PANEL (2) ON THAT DATE.
5. SEE SPECIAL PROVISION "TEMPORARY INFORMATION SIGNING" FOR ADDITIONAL INFORMATION.
6. WILL BE PAID FOR PER SQ FT AS "TEMPORARY INFORMATION SIGNING". EACH SIGN = 21 SQ FT AND THE DATE PANEL (2) WILL NOT BE MEASURED SEPARATELY FOR PAYMENT.

720-8

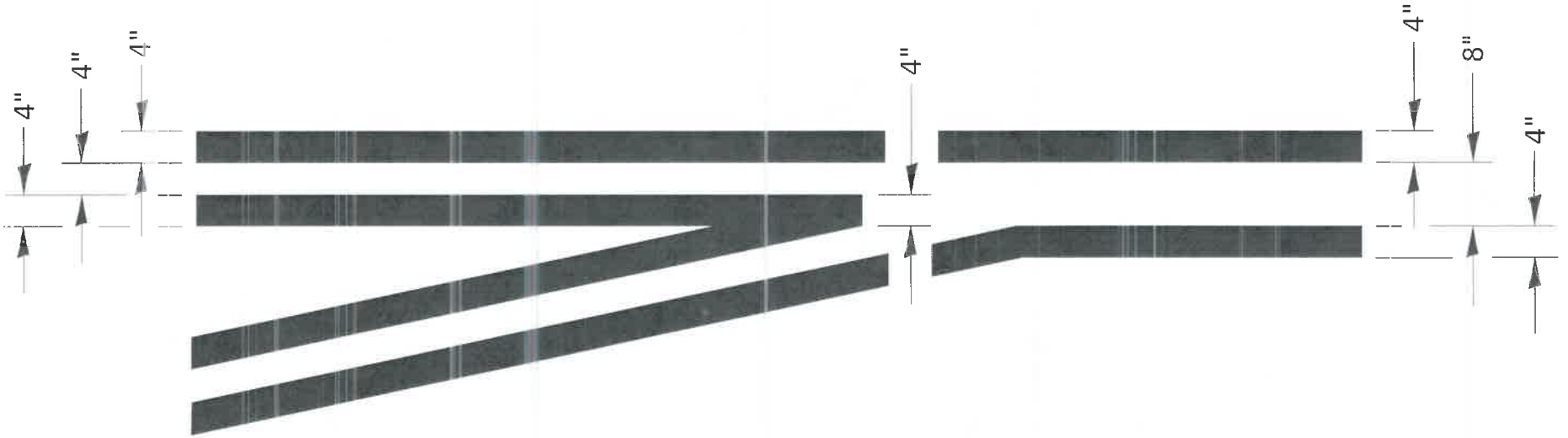

LEFT TURN LANE
TYPICAL APPLICATION

780-1

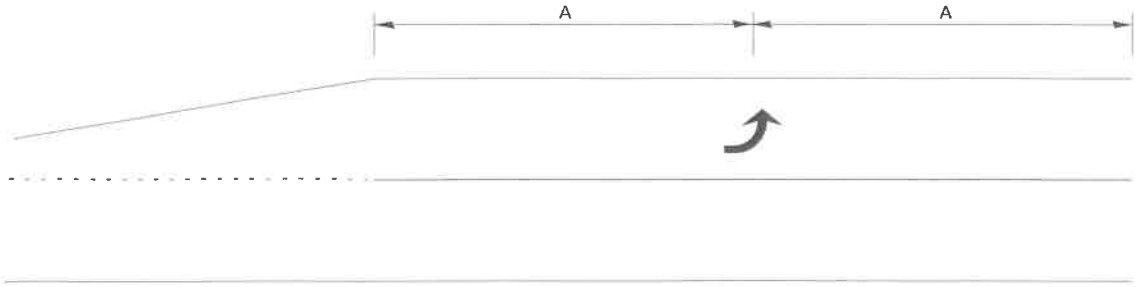

99' AND UNDER

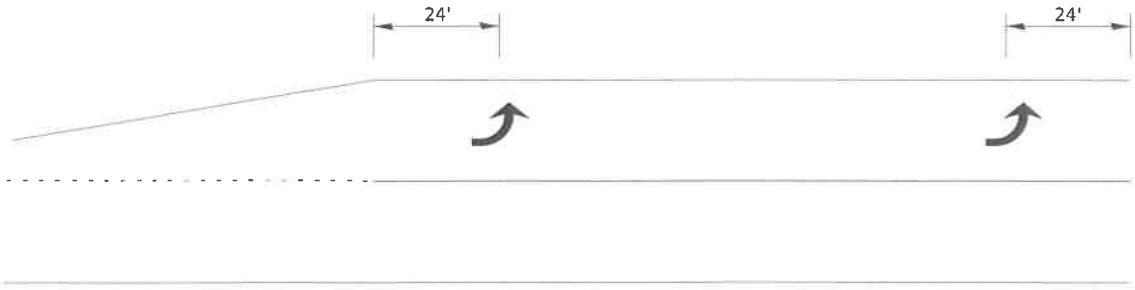

100' TO 149'

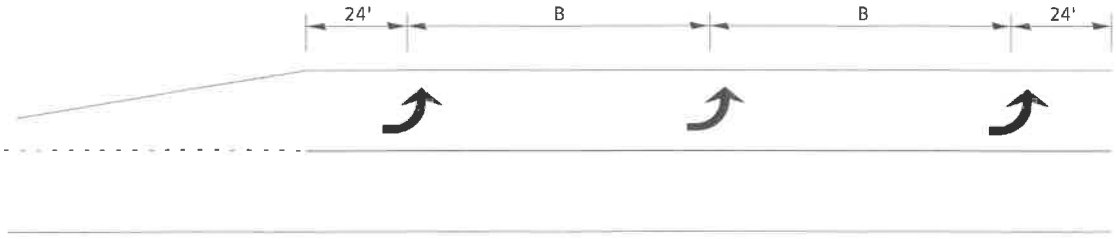

150' AND LONGER

TYPICAL PLACEMENT OF ARROWS IN TURN LANES

780-10

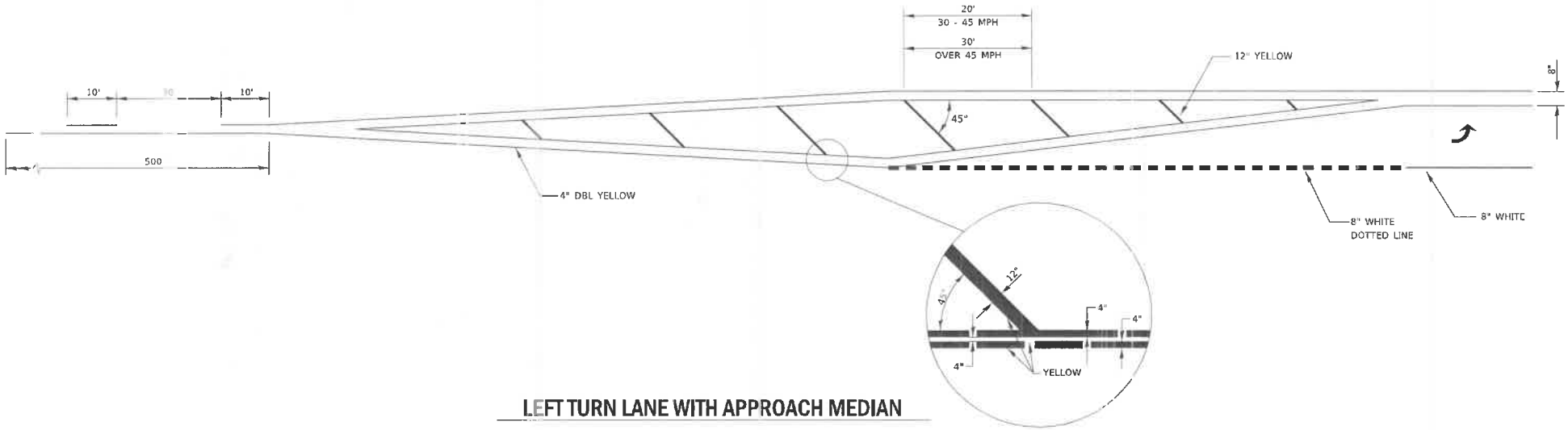

LEFT TURN LANE WITH APPROACH MEDIAN

780-19

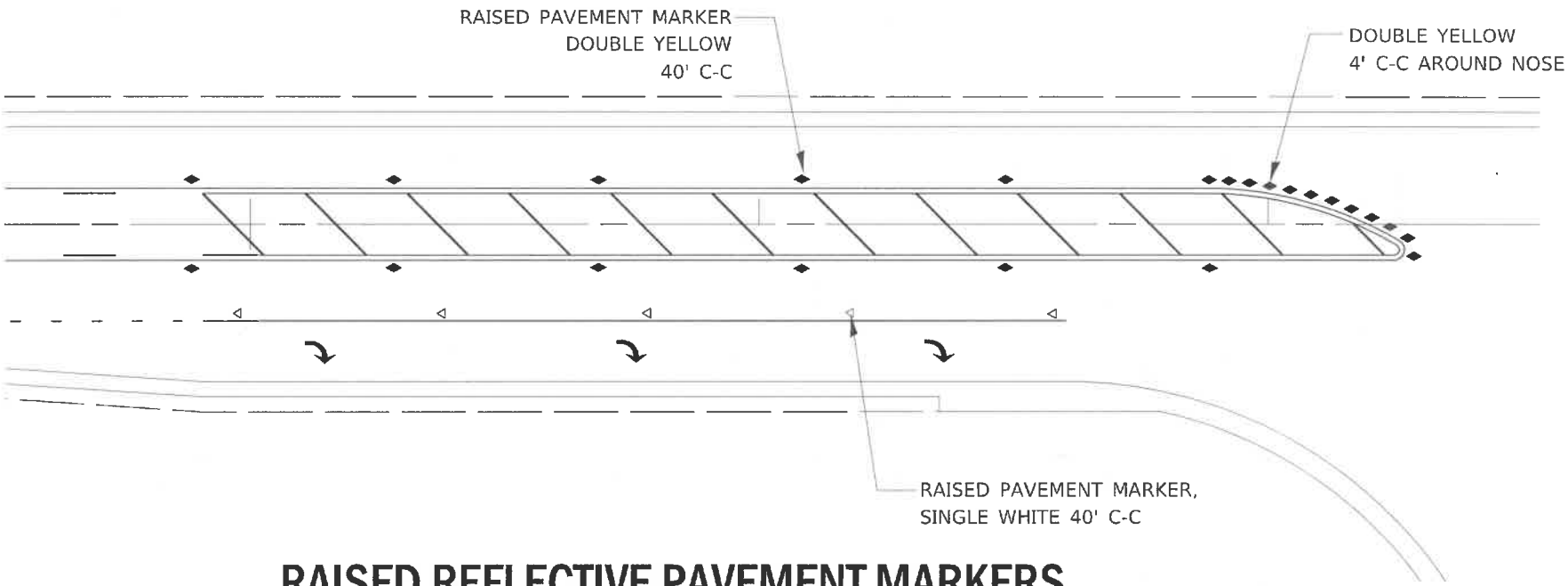

RAISED REFLECTIVE PAVEMENT MARKERS @ RIGHT TURN LANE

781-1

DeKalb County Prevailing Wage Rates posted on 1/28/2020

						Overtime								
Trade Title	Rg	Type	C	Base	Foreman	M-F	Sa	Su	Hol	H/W	Pension	Vac	Trng	Other Ins
ASBESTOS ABT-GEN	All	BLD		39.08	40.08	1.5	1.5	2.0	2.0	9.12	19.21	0.00	0.80	
ASBESTOS ABT-MEC	All	BLD		37.88	40.38	1.5	1.5	2.0	2.0	13.42	12.20	0.00	0.72	
BOILERMAKER	All	BLD		50.51	55.05	2.0	2.0	2.0	2.0	6.97	14.65	0.00	1.10	
BRICK MASON	All	BLD		46.88	51.57	1.5	1.5	2.0	2.0	10.85	19.31	0.00	0.95	
CARPENTER	All	BLD		41.48	46.04	1.5	1.5	2.0	2.0	11.70	18.05	0.00	0.73	
CARPENTER	All	HWY		42.70	44.45	1.5	1.5	2.0	2.0	11.70	18.05	0.00	0.73	
CEMENT MASON	All	ALL		47.01	49.01	2.0	1.5	2.0	2.0	10.65	22.86	0.00	0.50	
CERAMIC TILE FINISHER	All	BLD		40.56	40.56	1.5	1.5	2.0	2.0	11.00	12.80	0.00	0.86	
COMMUNICATION TECHNICIAN	All	BLD		41.00	45.10	1.5	1.5	2.0	2.0	13.74	15.02	0.00	0.82	
ELECTRIC PWR EQMT OP	All	ALL		43.71	59.52	1.5	1.5	2.0	2.0	6.00	13.55	0.00	0.77	1.31
ELECTRIC PWR EQMT OP	All	HWY		41.45	56.38	1.5	1.5	2.0	2.0	5.50	12.87	0.00	0.73	
ELECTRIC PWR GRNDMAN	All	ALL		33.69	59.52	1.5	1.5	2.0	2.0	6.00	10.44	0.00	0.59	1.01
ELECTRIC PWR GRNDMAN	All	HWY		32.00	56.38	1.5	1.5	2.0	2.0	5.50	9.92	0.00	0.66	
ELECTRIC PWR LINEMAN	All	ALL		52.44	59.52	1.5	1.5	2.0	2.0	6.00	16.27	0.00	0.93	1.58
ELECTRIC PWR LINEMAN	All	HWY		49.67	56.38	1.5	1.5	2.0	2.0	5.50	15.40	0.00	0.88	
ELECTRIC PWR TRK DRV	All	ALL		34.90	59.52	1.5	1.5	2.0	2.0	6.00	10.83	0.00	0.62	1.05
ELECTRIC PWR TRK DRV	All	HWY		33.14	56.38	1.5	1.5	2.0	2.0	5.50	10.29	0.00	0.59	
ELECTRICIAN	All	BLD		47.89	52.68	1.5	1.5	2.0	2.0	13.74	20.44	0.00	0.96	
ELEVATOR CONSTRUCTOR	All	BLD		52.09	58.60	2.0	2.0	2.0	2.0	15.57	9.96	4.17	0.62	
FENCE ERECTOR	SE	ALL		47.00	50.76	2.0	2.0	2.0	2.0	12.26	23.65	0.00	0.88	
GLAZIER	All	BLD		41.03	42.03	1.5	1.5	1.5	2.0	12.30	9.05	0.00	1.25	
HEAT/FROST INSULATOR	All	BLD		50.50	53.00	1.5	1.5	2.0	2.0	13.42	13.66	0.00	0.72	
IRON WORKER	NW	ALL		39.39	45.30	2.0	2.0	2.0	2.0	12.27	25.42	0.00	1.20	
IRON WORKER	SE	ALL		47.00	50.76	2.0	2.0	2.0	2.0	12.26	23.65	0.00	0.88	
LABORER	All	BLD		34.78	35.78	1.5	1.5	2.0	2.0	9.12	19.21	0.00	0.80	
LABORER	All	HWY		36.13	36.88	1.5	1.5	2.0	2.0	9.12	23.21	0.00	0.80	
LABORER, SKILLED	All	HWY		39.08	39.83	1.5	1.5	2.0	2.0	9.12	23.21	0.00	0.80	
LATHER	All	BLD		41.48	46.04	1.5	1.5	2.0	2.0	11.70	18.05	0.00	0.73	
MACHINIST	All	BLD		48.93	51.43	1.5	1.5	2.0	2.0	7.68	8.95	1.85	1.32	
MARBLE FINISHER	All	BLD		35.15	48.33	1.5	1.5	2.0	2.0	10.85	17.66	0.00	0.52	
MARBLE MASON	All	BLD		46.03	50.63	1.5	1.5	2.0	2.0	10.85	18.78	0.00	0.64	

MATERIAL TESTER I	All	ALL		39.08	39.83	1.5	1.5	2.0	2.0	9.12	23.21	0.00	0.80	
MATERIALS TESTER II	All	ALL		39.08	39.83	1.5	1.5	2.0	2.0	9.12	23.21	0.00	0.80	
MILLWRIGHT	All	BLD		40.68	44.75	1.5	1.5	2.0	2.0	11.21	16.75	0.00	0.75	0.20
OPERATING ENGINEER	All	BLD	1	46.80	50.80	2.0	2.0	2.0	2.0	20.50	15.80	2.35	1.55	
OPERATING ENGINEER	All	BLD	2	46.10	50.80	2.0	2.0	2.0	2.0	20.50	15.80	2.35	1.55	
OPERATING ENGINEER	All	BLD	3	43.65	50.80	2.0	2.0	2.0	2.0	20.50	15.80	2.35	1.55	
OPERATING ENGINEER	All	BLD	4	41.65	50.80	2.0	2.0	2.0	2.0	20.50	15.80	2.35	1.55	
OPERATING ENGINEER	All	BLD	5	50.55	50.80	2.0	2.0	2.0	2.0	20.50	15.80	2.35	1.55	
OPERATING ENGINEER	All	BLD	6	49.80	50.80	2.0	2.0	2.0	2.0	20.50	15.80	2.35	1.55	
OPERATING ENGINEER	All	BLD	7	46.80	50.80	2.0	2.0	2.0	2.0	20.50	15.80	2.35	1.55	
OPERATING ENGINEER	All	HWY	1	46.65	50.65	1.5	1.5	2.0	2.0	20.50	15.80	2.35	1.55	
OPERATING ENGINEER	All	HWY	2	46.10	50.65	1.5	1.5	2.0	2.0	20.50	15.80	2.35	1.55	
OPERATING ENGINEER	All	HWY	3	44.80	50.65	1.5	1.5	2.0	2.0	20.50	15.80	2.35	1.55	
OPERATING ENGINEER	All	HWY	4	43.35	50.65	1.5	1.5	2.0	2.0	20.50	15.80	2.35	1.55	
OPERATING ENGINEER	All	HWY	5	41.90	50.65	1.5	1.5	2.0	2.0	20.50	15.80	2.35	1.55	
OPERATING ENGINEER	All	HWY	6	49.65	50.65	1.5	1.5	2.0	2.0	20.50	15.80	2.35	1.55	
OPERATING ENGINEER	All	HWY	7	47.65	50.65	1.5	1.5	2.0	2.0	20.50	15.80	2.35	1.55	
ORNAMENTAL IRON WORKER	SE	ALL		45.06	48.66	2.0	2.0	2.0	2.0	10.52	20.76	0.00	0.70	
PAINTER	All	ALL		47.30	49.30	1.5	1.5	1.5	2.0	12.43	8.65	0.00	1.45	
PAINTER - SIGNS	All	BLD		39.84	44.74	1.5	1.5	2.0	2.0	2.73	3.39	0.00	0.00	
PILEDRIVER	All	BLD		41.02	45.53	1.5	1.5	2.0	2.0	11.50	17.05	0.00	0.73	
PILEDRIVER	All	HWY		43.70	45.45	1.5	1.5	2.0	2.0	11.70	18.05	0.00	0.73	
PIPEFITTER	All	BLD		49.60	52.60	1.5	1.5	2.0	2.0	10.75	19.85	0.00	2.67	
PLASTERER	All	BLD		44.50	47.17	1.5	1.5	2.0	2.0	14.50	17.29	0.00	1.50	
PLUMBER	All	BLD		51.00	54.05	1.5	1.5	2.0	2.0	15.37	14.75	0.00	1.35	
ROOFER	All	BLD		44.60	48.60	1.5	1.5	2.0	2.0	10.58	13.31	0.00	0.70	
SHEETMETAL WORKER	All	BLD		42.89	46.32	1.5	1.5	2.0	2.0	8.38	20.28	0.00	0.50	
SPRINKLER FITTER	All	BLD		41.97	44.72	1.5	1.5	2.0	2.0	10.23	12.59	0.00	0.52	
STEEL ERECTOR	SE	ALL		45.56	49.20	2.0	2.0	2.0	2.0	11.02	21.51	0.00	0.70	
STONE MASON	All	BLD		46.88	51.57	1.5	1.5	2.0	2.0	10.85	19.31	0.00	0.95	
TERRAZZO FINISHER	All	BLD		42.54	42.54	1.5	1.5	2.0	2.0	11.00	14.64	0.00	0.88	
TERRAZZO MASON	All	BLD		46.38	49.88	1.5	1.5	2.0	2.0	11.00	16.09	0.00	0.93	
TILE LAYER	All	BLD		40.24	44.67	1.5	1.5	2.0	2.0	11.00	16.30	0.00	0.60	
TILE MASON	All	BLD		47.50	51.50	1.5	1.5	2.0	2.0	11.00	16.06	0.00	0.93	
TRUCK DRIVER	All	ALL	1	37.36	37.91	1.5	1.5	2.0	2.0	9.00	11.64	0.00	0.15	
TRUCK DRIVER	All	ALL	2	36.13	36.53	1.5	1.5	2.0	2.0	8.25	10.14	0.00	0.15	

TRUCK DRIVER	All	ALL	3	37.71	37.91	1.5	1.5	2.0	2.0	9.00	11.64	0.00	0.15
TRUCK DRIVER	All	ALL	4	36.53	36.53	1.5	1.5	2.0	2.0	8.25	10.14	0.00	0.15
TUCKPOINTER	All	BLD		46.50	47.50	1.5	1.5	2.0	2.0	8.34	18.40	0.00	0.93

Legend
Rg Region
Type Trade Type - All,Highway,Building,Floating,Oil & Chip,Rivers
C Class
Base Base Wage Rate
OT M-F Unless otherwise noted, OT pay is required for any hour greater than 8 worked each day, Mon through Fri. The number listed is the multiple of the base wage.
OT Sa Overtime pay required for every hour worked on Saturdays
OT Su Overtime pay required for every hour worked on Sundays
OT Hol Overtime pay required for every hour worked on Holidays
H/W Health/Welfare benefit
Vac Vacation
Trng Training
Other Ins Employer hourly cost for any other type(s) of insurance provided for benefit of worker.

Explanations DEKALB COUNTY

IRONWORKERS (NORTHWEST) - That portion of the county from a point where the western county line intersects with Rt. 30, continuing eastward to Shabbona, north between Shabbona and Clare, and northeast between Clare and New Lebanon.

The following list is considered as those days for which holiday rates of wages for work performed apply: New Years Day, Memorial Day, Fourth of July, Labor Day, Thanksgiving Day, Christmas Day and Veterans Day in some classifications/counties. Generally, any of these holidays which fall on a Sunday is celebrated on the following Monday. This then makes work performed on that Monday payable at the appropriate overtime rate for holiday pay. Common practice in a given local may alter certain days of celebration. If in doubt, please check with IDOL.

EXPLANATION OF CLASSES

ASBESTOS - GENERAL - removal of asbestos material/mold and hazardous materials from any place in a building, including mechanical systems where those mechanical systems are to be removed. This includes the removal of asbestos materials/mold and hazardous materials from ductwork or pipes in a building when the building is to be demolished at the time or at some close future date.

ASBESTOS - MECHANICAL - removal of asbestos material from mechanical systems, such as pipes, ducts, and boilers, where the mechanical systems are to remain.

CERAMIC TILE FINISHER

The grouting, cleaning, and polishing of all classes of tile, whether for interior or exterior purposes, all burned, glazed or unglazed products; all composition materials, granite tiles, warning detectable tiles, cement tiles, epoxy composite materials, pavers, glass, mosaics, fiberglass, and all substitute materials, for tile made in tile-like units; all mixtures in tile like form of cement, metals, and other materials that are for and intended for use as a finished floor surface, stair treads, promenade roofs, walks, walls, ceilings, swimming pools, and all other places where tile is to form a finished interior or exterior. The mixing of all setting mortars

including but not limited to thin-set mortars, epoxies, wall mud, and any other sand and cement mixtures or adhesives when used in the preparation, installation, repair, or maintenance of tile and/or similar materials. The handling and unloading of all sand, cement, lime, tile, fixtures, equipment, adhesives, or any other materials to be used in the preparation, installation, repair, or maintenance of tile and/or similar materials. Ceramic Tile Finishers shall fill all joints and voids regardless of method on all tile work, particularly and especially after installation of said tile work. Application of any and all protective coverings to all types of tile installations including, but not be limited to, all soap compounds, paper products, tapes, and all polyethylene coverings, plywood, masonite, cardboard, and any new type of products that may be used to protect tile installations, Blastrac equipment, and all floor scarifying equipment used in preparing floors to receive tile. The clean up and removal of all waste and materials. All demolition of existing tile floors and walls to be re-tiled.

COMMUNICATIONS TECHNICIAN

Installing, manufacturing, assembling and maintaining sound and intercom, protection alarm (security), fire alarm, master antenna television, closed circuit television, low voltage control for computers and/or door monitoring, school communications systems, telephones and servicing of nurse and emergency calls, and the installation and maintenance of transmit and receive antennas, transmitters, receivers, and associated apparatus which operates in conjunction with above systems. All work associated with these system installations will be included EXCEPT the installation of protective metallic conduit in new construction projects (excluding less than ten-foot, runs strictly for protection of cable) and 120 volt AC (or higher) power wiring and associated hardware.

LABORER, SKILLED - HIGHWAY

Individuals engaged in the following types of work, irrespective of the site of the work: asbestos abatement worker, handling of any materials with any foreign matter harmful to skin or clothing, track laborer, cement handlers, chloride handlers, the unloading and loading with steel workers and re-bars, concrete workers wet, tunnel helpers in free air, batch dumpers, mason tenders, kettle and tar men, tank cleaners, plastic installers, scaffold workers, motorized buggies or motorized unit used for wet concrete or handling of building materials, laborers with de-watering systems, sewer workers plus depth, rod and chainmen with technical engineers, rod and chainmen with land surveyors, rod and chainmen with surveyors, vibrator operators, cement silica, clay, fly ash, lime and plasters, handlers (bulk or bag), cofferdam workers plus depth, on concrete paving, placing, cutting and tying of reinforcing, deck hand, dredge hand, and shore laborers, bankmen on floating plant, grade checker, power tools, front end man on chip spreaders, cassion workers plus depth, gunnite nozzle men, lead man on sewer work, welders, cutters, burners and torchmen, chainsaw operators, jackhammer and drill operators, layout man and/or drainage tile layer, steel form setter - street and highway, air tamping hammermen, signal man on crane, concrete saw operator, screedman on asphalt pavers, laborers tending masons with hot material or where foreign materials are used, mortar mixer operators, multiple concrete duct - leadsman, lumen, asphalt raker, curb asphalt machine operator, ready mix scalemen (permanent, portable or temporary plant), laborers handling masterplate or similar materials, laser beam operator, concrete burning machine operator, coring machine operator, plaster tender, underpinning and shoring of buildings, pump men, manhole and catch basin, dirt and stone tamper, hose men on concrete pumps, hazardous waste worker, lead base paint abatement worker, lining of pipe, refusing machine, assisting on direct boring machine, the work of laying watermain, fire hydrants, all mechanical joints to watermain work, sewer worker, and tapping water service and forced lift station mechanical worker.

MATERIAL TESTER I: Hand coring and drilling for testing of materials; field inspection of uncured concrete and asphalt.

MATERIAL TESTER II: Field inspection of welds, structural steel, fireproofing, masonry, soil, facade, reinforcing steel, formwork, cured concrete, and concrete and asphalt batch plants; adjusting proportions of bituminous mixtures.

OPERATING ENGINEERS - BUILDING

Class 1. Asphalt Plant; Asphalt Spreader; Autograde; Backhoes with Caisson Attachment; Batch Plant; Benoto (requires Two Engineers); Boiler and Throttle Valve; Caisson Rigs; Central Redi-Mix Plant; Combination Back Hoe Front End-loader Machine;

Compressor and Throttle Valve; Concrete Breaker (Truck Mounted); Concrete Conveyor; Concrete Paver (over 27E cu. ft.): Concrete Paver (27 cu. ft. and under); Concrete Placer; Concrete Pump (Truck Mounted); Concrete Conveyor (Truck Mounted); Concrete Tower; Cranes, All; GCI and similar types (required two operators only); Cranes, Hammerhead; Creter Crane; Crusher, Stone, etc.; Derricks, All; Derricks, Traveling; Formless Curb and Gutter Machine; Grader, Elevating; Grouting Machines; Highlift Shovels or Front Endloader 2-1/4 yd. and over; Hoists, Elevators, outside type rack and pinion and similar machines; Hoists, one, two and three Drum; Hoists, Two Tugger One Floor; Hydraulic Backhoes; Hydraulic Boom Trucks; Hydro Vac (and similar equipment - excluding hose work and any sewer work); Locomotives, All; Lubrication Technician; Manipulators; Motor Patrol; Pile Drivers and Skid Rig; Post Hole Digger; Pre-Stress Machine; Pump Cretes Dual Ram; Pump Cretes: Squeeze Cretes - Screw Type Pumps, Gypsum Bulker and Pump; Raised and Blind Hole Drill; Rock Drill (self-propelled); Rock Drill - Truck Mounted; Roto Mill Grinder; Scoops - Tractor Drawn; Slipform Paver; Scrapers Prime Movers; Straddle Buggies; Tie Back Machine; Tractor with Boom and Side Boom; Trenching Machines.

Class 2. Bobcat (over 3/4 cu. yd.); Boilers; Brick Forklift; Broom, All Power Propelled; Bulldozers; Concrete Mixer (Two Bag and Over); Conveyor, Portable; Forklift Trucks; Highlift Shovels or Front Endloaders under 2-1/4 yd.; Hoists, Automatic; Hoists, Sewer Dragging Machine; Hoists, Tugger Single Drum; Laser Screed; Rollers, All; Steam Generators; Tractors, All; Tractor Drawn Vibratory Roller; Winch Trucks with "A" Frame.

Class 3. Air Compressor; Asphalt Spreader; Combination - Small Equipment Operator; Generators; Heaters, Mechanical; Hoists, Inside Elevators - (Rheostat Manual Controlled); Hydraulic Power Units (Pile Driving, Extracting, or Drilling - with a seat); Lowboys; Pumps, Over 3" (1 to 3 not to exceed total of 300 ft.); Pumps, Well Points; Welding Machines (2 through 5); Winches, 4 Small Electric Drill Winches; Bobcat (up to and including 3/4 cu. yd.).

Class 4. Elevator push button with automatic doors; Hoists, Inside; Oilers; Brick Forklift.

Class 5. Assistant Craft Foreman

Class 6. Mechanics: Welders.

Class 7. Gradall

OPERATING ENGINEERS - HIGHWAY CONSTRUCTION

Class 1. Asphalt Plant; Asphalt Heater and Planer Combination; Asphalt Heater Scarfire; Asphalt Silo Tender; Asphalt Spreader; Autograder; ABG Paver; Backhoes with Caisson Attachment; Ballast Regulator; Belt Loader; Caisson Rigs; Car Dumper; Central Redi-Mix Plant; Backhoe w/shear attachments; Combination Backhoe Front Endloader Machine, (1 cu. yd. Backhoe Bucket or over or with attachments); Concrete Breaker (Truck Mounted); Concrete Conveyor; Concrete Paver over 27E cu. ft.; Concrete Placer; Concrete Tube Float; Cranes, all attachments; Cranes, Tower of all types; Creter Crane; Crusher, Stone, etc.; Derricks, All; Derrick Boats; Derricks, Traveling; Directional Boring Machine over 12"; Dredges; Formless Curb and Gutter Machine; Grader, Elevating; Grader, Motor Grader, Motor Patrol, Auto Patrol, Form Grader, Pull Grader, Subgrader; Guard Rail Post Driver Mounted; Hoists, One, Two and Three Drum; Hydraulic Backhoes; Hydro Vac, Self Propelled, Truck Mounted (excluding hose work and any sewer work); Lubrication Technician; Manipulators; Pile Drivers and Skid Rig; Pre-Stress Machine; Pump Cretes Dual Ram; Rock Drill - Crawler or Skid Rig; Rock Drill - Truck Mounted; Rock/Track Tamper; Roto Mill Grinder; Slip-Form Paver; Snow Melters; Soil Test Drill Rig (Truck Mounted); Straddle Buggies; GCI Crane; Hydraulic Telescoping Form (Tunnel); Tie Back Machine; Tractor Drawn Belt Loader; Tractor Drawn Belt Loader with attached pusher; Tractor with Boom; Tractaire with Attachments; Traffic Barrier Conveyor Machine; Raised or Blind Hole Drills; Trenching Machine (over 12"); Truck Mounted Concrete Pump with Boom; Truck Mounted Concrete Conveyor; Work Boat (no license required - 90 h.p. or above); Underground Boring and/or Mining Machines; Wheel Excavator; Widener (APSCO).

Class 2. Batch Plant; Bituminous Mixer; Boiler and Throttle Valve; Bulldozers; Car Loader Trailing Conveyors; Combination Backhoe Front Endloader Machine (less than 1 cu. yd. Backhoe Bucket or over or with attachments); Compressor and Throttle Valve;

Compressor, Common Receiver (3); Concrete Breaker or Hydro Hammer; Concrete Grinding Machine; Concrete Mixer or Paver 7S Series to and including 27 cu. ft.; Concrete Spreader; Concrete Curing Machine, Burlap Machine, Belting Machine and Sealing Machine; Concrete Wheel Saw (large self-propelled - excluding walk-behinds and hand-held); Conveyor Muck Cars (Haglund or Similar Type); Drills, all; Finishing Machine - Concrete; Highlift Shovels or Front Endloader; Hoist - Sewer Dragging Machine; Hydraulic Boom Trucks (All Attachments); Hydro Blaster; All Locomotives, Dinky; Off-Road Hauling Units; Non-Self Loading Dump; Ejection Dump; Pump Cretes: Squeeze Cretes - Screw Type Pumps, Gypsum Bulker and Pump; Roller, Asphalt; Rotary Snow Plows; Rototiller, Seaman, etc., self-propelled; Scoops - Tractor Drawn; Self-Propelled Compactor; Spreader - Chip - Stone, etc.; Scraper; Scraper - Prime Mover in Tandem (Regardless of Size); Tank Car Heater; Tractors, Push, Pulling Sheeps Foot, Disc, Compactor, etc.; Tug Boats.

Class 3. Boilers; Brooms, All Power Propelled; Cement Supply Tender; Compressor, Common Receiver (2); Concrete Mixer (Two Bag and Over); Conveyor, Portable; Farm-Type Tractors Used for Mowing, Seeding, etc.; Fireman on Boilers; Forklift Trucks; Grouting Machine; Hoists, Automatic; Hoists, All Elevators; Hoists, Tugger Single Drum; Jeep Diggers; Low Boys; Pipe Jacking Machines; Post-Hole Digger; Power Saw, Concrete Power Driven; Pug Mills; Rollers, other than asphalt; Seed and Straw Blower; Steam Generators; Stump Machine; Winch Trucks with "A" Frame; Work Boats; Tamper - Form - Motor Driven.

Class 4. Air Compressor - Small and Large; Asphalt Spreader, Backend Man; Bobcat (Skid Steer) all; Brick Forklift; Combination - Small Equipment Operator; Directional Boring Machine up to 12"; Generators; Heaters, Mechanical; Hydraulic Power Unit (Pile Driving, Extracting, or Drilling); Hydro-Blaster; Light Plants, All (1 through 5); Pumps, over 3" (1 to 3 not to exceed a total of 300 ft.); Pumps, Well Points; Tractaire; Trencher 12" and under; Welding Machines (2 through 5); Winches, 4 Small Electric Drill Winches.

Class 5. Oilers and Directional Boring Machine Locator.

Class 6. Field Mechanics and Field Welders

Class 7. Gradall and machines of like nature.

TERRAZZO FINISHER

The handling of sand, cement, marble chips, and all other materials that may be used by the Mosaic Terrazzo Mechanic, and the mixing, grinding, grouting, cleaning and sealing of all Marble, Mosaic, and Terrazzo work, floors, base, stairs, and wainscoting by hand or machine, and in addition, assisting and aiding Marble, Masonic, and Terrazzo Mechanics.

TRUCK DRIVER - BUILDING, HEAVY AND HIGHWAY CONSTRUCTION Class 1. Two or three Axle Trucks. A-frame Truck when used for transportation purposes; Air Compressors and Welding Machines, including those pulled by cars, pick-up trucks and tractors; Ambulances; Batch Gate Lockers; Batch Hopperman; Car and Truck Washers; Carry-alls; Fork Lifts and Hoisters; Helpers; Mechanics Helpers and Greasers; Oil Distributors 2-man operation; Pavement Breakers; Pole Trailer, up to 40 feet; Power Mower Tractors; Self-propelled Chip Spreader; Skipman; Slurry Trucks, 2-man operation; Slurry Truck Conveyor Operation, 2 or 3 man; Teamsters Unskilled dumpman; and Truck Drivers hauling warning lights, barricades, and portable toilets on the job site.

Class 2. Four axle trucks; Dump Crets and Adgetors under 7 yards; Dumpsters, Track Trucks, Euclids, Hug Bottom Dump Turnapulls or Turnatrailers when pulling other than self-loading equipment or similar equipment under 16 cubic yards; Mixer Trucks under 7 yards; Ready-mix Plant Hopper Operator, and Winch Trucks, 2 Axles.

Class 3. Five axle trucks; Dump Crets and Adgetors 7 yards and over; Dumpsters, Track Trucks, Euclids, Hug Bottom Dump Turnatrailers or turnapulls when pulling other than self-loading equipment or similar equipment over 16 cubic yards; Explosives and/or Fission Material Trucks; Mixer Trucks 7 yards or over; Mobile Cranes while in transit; Oil Distributors, 1-man operation; Pole Trailer, over 40 feet; Pole and Expandable Trailers hauling material over 50 feet long; Slurry trucks, 1-man operation; Winch trucks, 3 axles or more; Mechanic--Truck Welder and Truck Painter.

Class 4. Six axle trucks; Dual-purpose vehicles, such as mounted crane trucks with hoist and accessories; Foreman; Master Mechanic; Self-loading equipment like P.B. and trucks with scoops on the front.

Other Classifications of Work:

For definitions of classifications not otherwise set out, the Department generally has on file such definitions which are available. If a task to be performed is not subject to one of the classifications of pay set out, the Department will upon being contacted state which neighboring county has such a classification and provide such rate, such rate being deemed to exist by reference in this document. If no neighboring county rate applies to the task, the Department shall undertake a special determination, such special determination being then deemed to have existed under this determination. If a project requires these, or any classification not listed, please contact IDOL at 217-782-1710 for wage rates or clarifications.

LANDSCAPING

Landscaping work falls under the existing classifications for laborer, operating engineer and truck driver. The work performed by landscape plantsman and landscape laborer is covered by the existing classification of laborer. The work performed by landscape operators (regardless of equipment used or its size) is covered by the classifications of operating engineer. The work performed by landscape truck drivers (regardless of size of truck driven) is covered by the classifications of truck driver.

Environmental comment sheet for Permit No. **L-17416**
(Proposed work in state ROW)

Description of Work:__IL 23 UPGRADE@Gurler Road – located South of I-88 at DeKalb.
City of DeKalb / Krusinski c/o Kimley

Date: June 5, 2020

Natural Resource Comments:
Sequence # 23157 - ESR submitted 4/17/2020 for approximately 0.44 acres of proposed right of way.

- Natural Resources Review dated 4/23/2020 includes TREC report dated 4/23/2020
- Cultural Resource Clearance dated 5/13/2020

Special Waste Comments:

A review of databases & ISGS reports revealed:
Sequence # 23157 – ESR submitted 4/17/2020 for approximately 0.44 acres of proposed right of way.

Report is PENDING.

BDE Central office will send information for Permit = PENDING.

Where contamination is encountered through excavation in the state right of way it should be managed off-site using IDOT's generator number for _**DEKALB**_ County.

Generator #__**0358995002**__.

RFR

NOTICE OF AWARD

Dated 9/13/2021

TO: Curran Contracting Company
(BIDDER)

ADDRESS: 286 Memorial Court Crystal Lake, IL 60014

CONTRACT/PROJECT Illinois Route 23 and Gurler Road
(Insert name of Contract as it appears in Bidding Documents)

You are notified that your Bid dated August 30th, 2021, for the above Contract has been considered. You are the apparent Successful Bidder and have been awarded the Contract.

Contract Price of your Contract is $1,736419.37

2 copies of each of the proposed Contract documents (except Drawings) accompany this Notice of Award.

You must comply with the following conditions within fifteen (15) days of the date of this Notice of Award.

Deliver to the OWNER 2 fully executed counterparts of the Contract Documents.

Deliver with the executed Contract Documents the CONTRACTOR'S proof of insurance, if not previously provided.

(List other conditions precedent). Performance Bond

Failure to comply with these conditions within the time specified will entitle OWNER to consider your Bid in default, to annul this Notice of Award and to declare your Bid security forfeited.

Within ten (10) days after you comply with the above conditions, OWNER will return to you one (1) fully executed counterpart of the Contract Documents.

CITY OF DEKALB
(OWNER)

By: _____
Bill Nicklas, City Manager